Tennessee Valley Authority
Regulatory Submittal for Kingston Fossil Plant

Documents submitted:
Weir 1 Removal Work Plan

Date Submitted:
03/02/2010

Submitted to whom
Leo Francendese

Concurrence

Received	Not Applicable	TVA
☒	☐	Mike Scott
☐	☒	Steve McCracken
☒	☐	Kathryn Nash KN
☒	☐	Dennis Yankee DHY
☒	☐	Michelle Cagley MC
☒	☐	Tim Russ
☐	☐	_____

Received	Not Applicable	Jacobs
☒	☐	Steve Richardson
☒	☐	Julie Pfeffer
☐	☐	_____
☐	☐	_____
☐	☐	_____
☐	☐	_____

Approvals

TVA Michael T Scott Date 3/2/10

EPA Leo Francendese Date 3/5/10

Consulted w/ TDEC

cc:

- ☒ Anda Ray, TVA
- ☒ Barbara Scott, TDEC
- ☒ Leo Francendese, EPA
- ☒ Mike Scott, TVA
- ☒ Dennis Yankee, TVA
- ☒ Kathryn Nash, TVA
- ☒ Cynthia Anderson, TVA
- ☒ Steve McCracken, TVA
- ☒ EDM
- ☒ Julie Pfeffer, Jacobs
- ☒ Steve Richardson, Jacobs
- ☒ Michelle Cagley, TVA
- ☒ Greg Signer, TVA
- ☒ KIF Incident Document Control
- ☒ Katie Kline, TVA
- ☒ Gretchen Wahl, Jacobs
- ☒ Dannena Bowman, EPA
- ☒ Jeff Gary, Jacobs
- ☒ Robert Pullen, Jacobs

Weir 1 Removal Work Plan

1.0 Purpose

Weir 1 was constructed shortly after the spill (completion on January 5, 2009) in the Emory River just north of the area of the destroyed intake skimmer wall (ERM 1.95). Weir 1 was designed to reduce the movement of ash in the Emory River immediately after the spill. It was to be removed once the threat of ash movement was mitigated. With the major portion of the ash having been removed from the river, the weir's purpose has been achieved but is no longer necessary and in fact, poses a flood risk and is planned to be removed.

The attachments to this work plan include a photo of the weir during construction and a plan view with associated cross sections of how the weir was built. The original estimated tonnage was 30,000 tons of 6-12" rip rap to be intermixed with 36" shot rock. However, only 17,470 tons of rock were placed due to the ash not letting the stone penetrate to the river bottom. Therefore, ash remains underneath the weir which must be removed during hydraulic dredging activities. The weir contains a 50 ft long channel notch of 2 feet. The pre-slide river bottom in this area is roughly elevation 700 ft in the middle of the channel with the bottom of rock/top of ash varying from 724 to 728 ft. The top of the weir is an elevation of 730 ft and at 728 ft in the notch. The weir is roughly 120 ft wide and 631 ft long.

2.0 Design

Steve Scott of the Army Corps of Engineers evaluated the migration potential of ash above the weir should the weir be removed. He concluded that Weir 1 served two purposes to limiting fly ash transport after the spill. When the ash filled the channel, the slope of the new bottom increased between the area with the ash deposits and the lesser affected channel downstream. The weir acted as a control on the upstream water surface elevation which reduced the affect of this slope on energy upstream. This subsequently reduced the sediment transport potential of the upstream deposits except for large flow events. Additionally, the weir trapped the coarser fractions of the ash that may have transported during the average to low flows.

Now that the channel has been dredged to approximately prespill depths, there is less of a change in bottom slope and therefore less energy causing erosion of the ash. So, although the weir still acts as an upstream control on the surface water elevation, the sediment transport potential of the upstream reach has been significantly reduced by the dredging operation. Additionally, the ash remaining is very compacted and crusted and has to be broken up mechanically prior to dredging. This indicates that migration of upstream material is not a significant risk.

Removal of the weir may result in mobilization of the adjacent ash deposits as well as deposits upstream in the channel. Two areas, one immediately upstream of the weir and one along the interim ash berm near the rookery and Dike C are at risk of mobilization if

the weir is removed first. Removal of the weir will increase the local velocity and bed shear within this area and increase the potential for transport to downstream reaches. Removal of the weir will increase the energy slope within the channel and potentially mobilize these deposits. Therefore, the ash in these areas will be removed before the weir is removed.

River operations ran the flow models on the Emory River with the weir present and found that there would be increased flood elevations between 4.4 ft (for the 10-year flood event) and 6.7 ft (for the 500-year flood event) at river mile 2.0. Calculations illustrate that the weir will affect flood elevations several miles upstream (at least to mile 12, the furthest that the model goes).

3.0 Construction

A turbidity curtain will be installed around the work area to minimize migration of ash during removal activities. The weir and associated ash would be removed by mechanical means to a barge. A clamshell or excavator would remove the rock slowly, allowing the majority of the ash to fall behind. The rock would be loaded onto a transport barge and taken to Sevenson's staging area near the skimmer wall or to the north point for offloading. An excavator will remove the rock from the barge and onto a land stockpile or directly into trucks. Rock would be moved by articulating trucks directly to a construction activity or to a "dirty" storage area onsite for use in the future as part of the restoration effort.

Ash beneath the weir or ash left behind would be dredged under the dredge plan addendum.

4.0 Schedule

This work will begin after the ash above the weir and adjacent to the interim berm is removed, approximately March 8. The work is anticipated to take 2-3 weeks.

.

5.0 Waste Management

The rock generated would be placed within an exclusion zone in a temporary storage area such as near the intersection of Dike C and D for small quantities or used immediately onsite in the ballfield for road stabilization or elsewhere for new construction activities (such as the platform for the lateral expansion area). The more significant dirty rock temporary storage area is on the Peninsula, across the intake channel from the ash recovery activities should the rock not be of immediate use.

6.0 Health and Safety

The site-wide safety and health plan will be followed. Particular care will be placed on working around water.

2 12:58PM

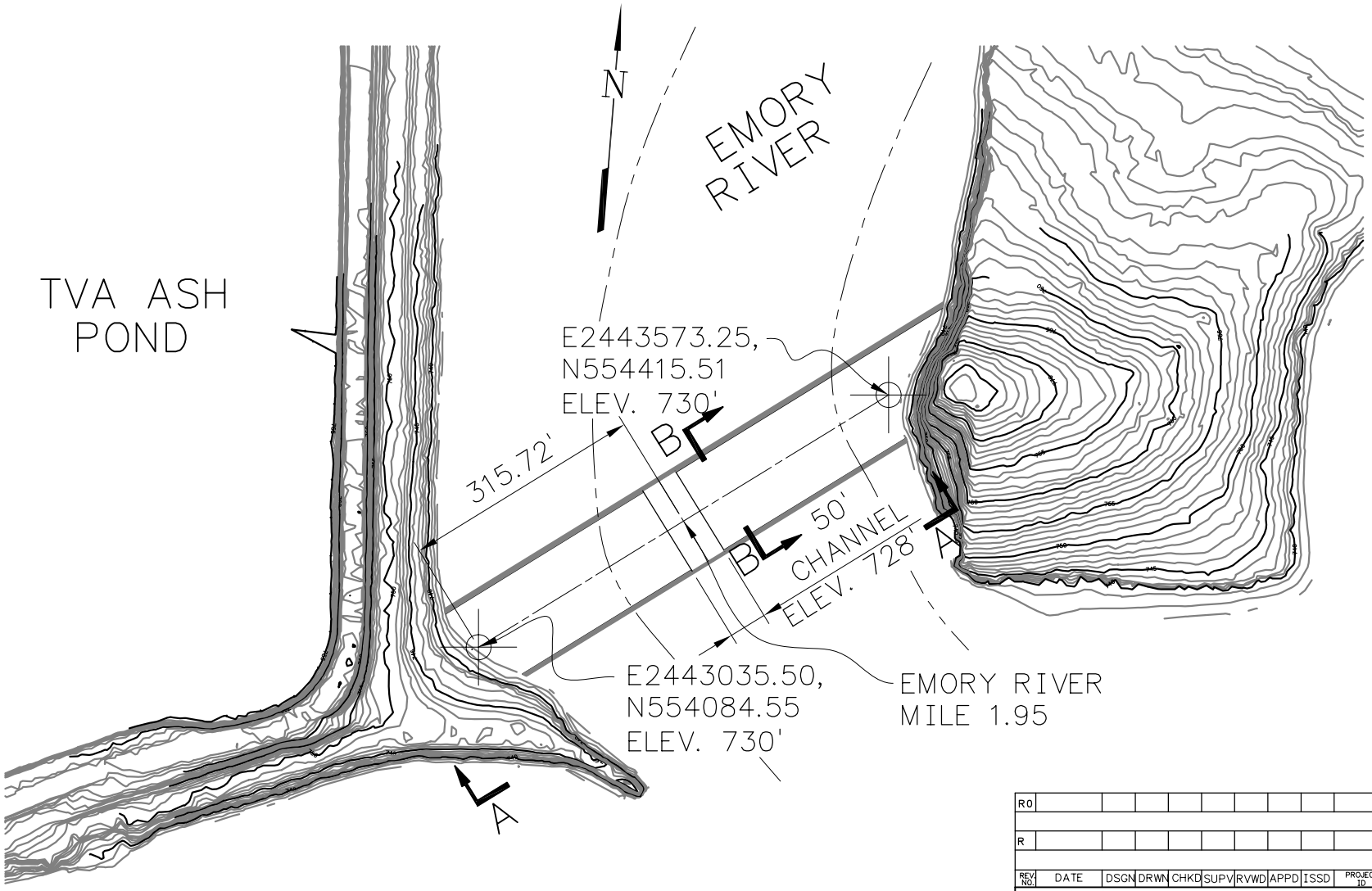

R0										
R										
REV NO.	DATE	DSGN	DRWN	CHKD	SUPV	RVWD	APPD	ISSD	PROJECT ID	AS CONST REV CD

SCALE: 1'=200' EXCEPT AS NOTED

DISCIPLINE INTERFACE
1
2
3
4

YARD

KINGSTON DIKE 1
DIKE PLAN
SHEET 1 OF 4

DESIGNED BY:	DRAWN BY:	CHECKED BY:	SUPERVISED BY:	REVIEWED BY:	APPROVED BY:	ISSUED BY:

KINGSTON FOSSIL PLANT
TENNESSEE VALLEY AUTHORITY
FOSSIL AND HYDRO ENGINEERING

AUTOCAD R15	DATE	36	C	SK-KIF-D1-1	R 0

TASK COMPLETED BY:	REV NO.

PLOT FACTOR:200
A_TVA

C.A.D. DRAWING
DO NOT ALTER MANUALLY

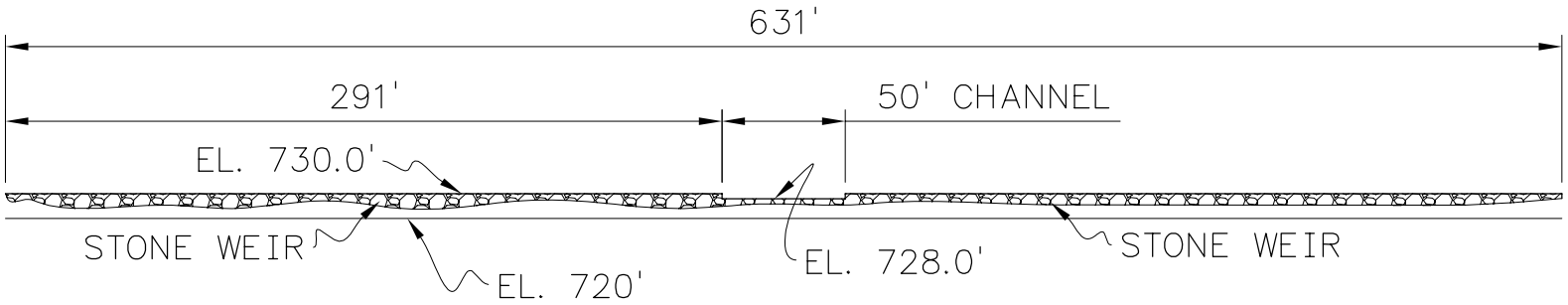

REV. NO.	DATE	DSGN	DRWN	CHKD	SUPV	RVWD	APPD	ISSD	PROJECT ID	AS CONST	REV CD
R0											
R											

DISCIPLINE INTERFACE
1
2
3
4

SCALE: 1'=200' EXCEPT AS NOTED

YARD

KINGSTON DIKE 1
SECTION A–A
SHEET 2 OF 4

DESIGNED BY:	DRAWN BY:	CHECKED BY:	SUPERVISED BY:	REVIEWED BY:	APPROVED BY:	ISSUED BY:

KINGSTON FOSSIL PLANT
TENNESSEE VALLEY AUTHORITY
FOSSIL AND HYDRO ENGINEERING

AUTOCAD R15	DATE	36	C	SK–KIF–D1–2	R 0

TASK COMPLETED BY:	REV NO.

PLOT FACTOR:200
A_TVA

C.A.D. DRAWING
DO NOT ALTER MANUALLY

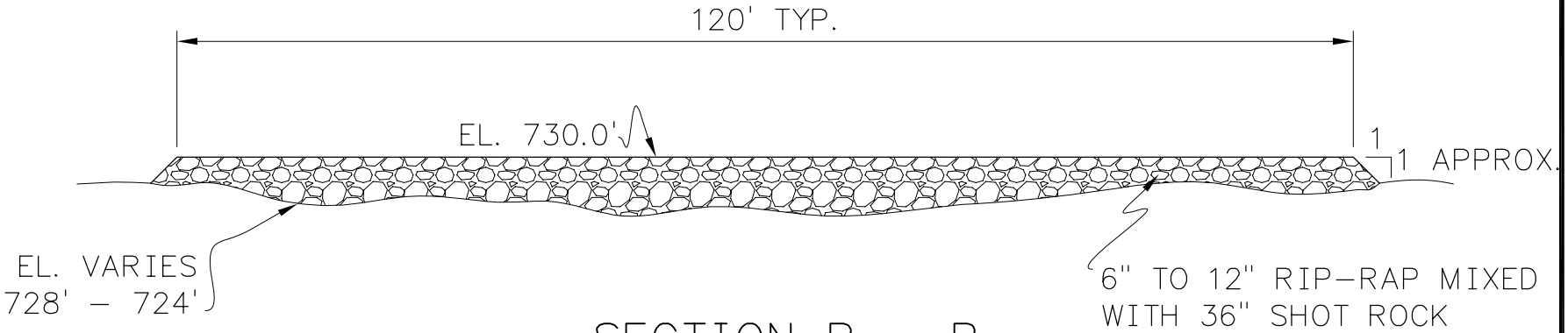

SECTION B - B

REV NO.	DATE	DSGN	DRWN	CHKD	SUPV	RVWD	APPD	ISSD	PROJECT ID	AS CONST	REV CD
R0											
R											

DISCIPLINE INTERFACE
1
2
3
4

SCALE: 1'=200' EXCEPT AS NOTED

YARD

KINGSTON DIKE 1
SECTION B-B
SHEET 3 OF 4

DESIGNED BY:	DRAWN BY:	CHECKED BY:	SUPERVISED BY:	REVIEWED BY:	APPROVED BY:	ISSUED BY:

KINGSTON FOSSIL PLANT
TENNESSEE VALLEY AUTHORITY
FOSSIL AND HYDRO ENGINEERING

AUTOCAD R15	DATE	36	C	SK-KIF-D1-3	R 0

TASK COMPLETED BY:	REV NO.

PLOT FACTOR:200
A_TVA

C.A.D. DRAWING
DO NOT ALTER MANUALLY