General Mitigation Plan for Cold Joints, Defects and Other Nonconforming Soil-Cement Walls

Perimeter Containment Construction
Kingston Fossil Plant
Harriman, Roane County, Tennessee

Revision 2

Stantec Consulting Services Inc.
One Team. Infinite Solutions
1409 North Forbes Road
Lexington, KY 40511
Tel: (859) 422-3000 • Fax: (859) 422-3100
www.stantec.com

Prepared for:
Tennessee Valley Authority
Chattanooga, TN

August 20, 2012

General Mitigation Plan for Cold Joints, Defects and Other Nonconforming Soil-Cement Walls

Perimeter Containment Construction
Kingston Fossil Plant
Harriman, Roane County, Tennessee

Revision 2

Prepared for:
Tennessee Valley Authority
Chattanooga, TN

August 20, 2012

General Mitigation Plan for Cold Joints, Defects and Other Nonconforming Soil-Cement Walls

Perimeter Containment Construction
Kingston Fossil Plant
Harriman, Roane County, Tennessee

Table of Contents

Section **Page No.**

1. Objective 1
1.1. Design Strength of Walls 1

2. Summary of QC Assessments 2

3. Alignment and Embedment 3

4. Cold Joints 3
4.1. Mitigation Panels 3
4.2. QC of Mitigation Elements for Cold Joints - Panels 4
4.3. Mitigation by Jet Grouting 4
4.4. QC of Mitigation Elements for Cold Joints – Jet Grouting 4

5. Low Strength 6
5.1. Mitigation Panels 6
5.2. QC of Mitigation Elements 8

6. Defects 8
6.1. Pocket Defects – Mitigation by Wall Panels 8
6.2. Linear Defects – Mitigation by Wall Panels 9
6.3. QC of Mitigation Elements – Wall Panels 9
6.4. Defects – Mitigation by Jet Grouting 9
6.5. QC of Mitigation Elements – Jet Grouting 12

7. Additional Sampling 13

8. Buttress Wall Damage/Defects 14
8.1. Reference Line for Buttress Wall Damage 14
8.2. Mitigation Methods 14
8.3. QC of Mitigation Elements 15

Attachments 1

Document Revisions

Document Version	Date	Section	Details of Changes
Rev. 0	1/18/2012	All	Initial issue of document
Rev. 1	4/10/2012	All	Numbered all sub-sections
		1.	Added clarification that this plan is subject to revision and will be applicable to all perimeter segments.
		4.3	Added bullet discussing vertical tolerance requirement for pre-drilled holes. Added bullet discussing requirements for pre-drilled holes with depths that exceed 50-feet.
		4.4	Added QC requirements for the jet grouting mitigation alternative
		5.1	Added language to define conditions where two mitigation panels would be required for a low-strength defect
		6.1	Added language to define conditions where two mitigation panels would be required for pocket defects
		8.1	Clarified definition of the reference line for critical areas of the buttress wall
		8.2	Revised section to address the potential outboard perimeter wall damage/defects and reference to specific mitigation plan for damages and defects to the cement-bentonite walls
		8.2	Added description of mitigation approaches for large scale buttress wall damage
		8.3	Added QC requirements for the mitigation alternatives for large scale buttress wall damage
		Figure 2D	Revised jet grout columns layout dimensions
		Figures 3A & 3B	Added Note 3 indicating where two mitigation panels would be required
		Figures 5A to 5D	Added Note 2 indicating where two mitigation panels would be required
		Figure 6B	Revised buttress wall damage/defect section view to include ash excavation line and top of wall callout
		Figures 6C & 6D	Added Figures 6C and 6D to explain mitigation approaches for large scale buttress wall repairs.

Document Version	Date	Section	Details of Changes
Rev. 2	8/20/2012	1.	Generalized introduction to cover all perimeter segments.
		1.1	Added a new section to define the CB wall design strength for each Segment, and discuss wet grab to core correlation factors.
		4.	Referenced project specifications and Field Change Notice 054 for definition of a cold joint.
		4.2	Removed specific strength reference.
		4.3	Reference diameters D_1 and D_2, consistent with Figures 2D and 2E. Revised to reflect acceptance of jet grouting as an option for cold joint mitigation.
		4.4	Generalized strength requirements for jet grouting by including the required ratio between grout strength and CB strength.
		5	Referenced Field Change Notice 052.
		5.2	Removed specific strength reference.
		6.1	Revised heading to distinguish between the two wall mitigation alternatives. Moved discussion of jet grouting to Section 6.4.
		6.2	Revised heading to distinguish between the two wall mitigation alternatives.
		6.3	Revised heading to distinguish between the two wall mitigation alternatives. Moved discussion of QC for jet grouting to Section 6.5. Removed specific strength reference.
		6.4	Added a new section describing the wall mitigation alternative using overlapping jet grouted columns.
		6.5	Added a new section describing the QC requirements for the jet grouted column wall mitigation alternative.
		8.3	Generalized strength requirement to include reference to the correlation factor.
		Figures 5E and 5F	Added Figures 5E and 5F to explain the wall mitigation alternative using overlapping jet grouted columns.

General Mitigation Plan for Cold Joints, Defects, and Other Nonconforming Soil-Cement Walls

Perimeter Containment Construction
Kingston Fossil Plant
Harriman, Roane County, Tennessee

1. Objective

The objective of this plan is to establish general mitigation approaches to address deficiencies identified in the Cement-Bentonite (CB) walls built for perimeter containment. These deficiencies have included cold joints, low strengths, and defects relative to the established Specifications and Quality Control (QC) criteria in the approved design documents for each perimeter segment. This plan also defines the critical zones in the buttress walls requiring mitigation to address damage and/or defects that may be realized during construction of the rock berm along Segments 1, 2, and 8. Quality Control considerations are outlined for each mitigation approach.

Details presented herein are intended to serve as guidance for the Perimeter Wall Stabilization (PWS) Contractor (Geo-Con) to develop mitigation plans (including shop drawings) to address specific elements of non-conformance. As outlined within the established project framework, these mitigation plans shall be submitted to the Engineer of Record (EOR) for review and the Technical Contract Manager (TCM) for approval prior to implementation.

This general plan will be applicable to all segments of the perimeter containment construction (Segments 1 through 8). The plan is subject to revision throughout the project to reflect new information and conditions that may be encountered during ongoing construction.

1.1. Design Strength of Walls

In some cases, the requirements for a wall mitigation depend on the design strength of the cement bentonite walls. The wall design strength is defined as:

f_{CB} = design, mean unconfined compression strength for the cement bentonite walls.

The value of f_{CB} used in the design of the various perimeter segments is tabulated below. These values shall be used to determine the minimum requirements, as applicable and described herein, for mitigation elements constructed within a particular perimeter segment.

QC assessments for strength in the constructed walls rely upon unconfined compressive strengths measured in laboratory tests on core or wet grab samples. Minimum strength requirements for core or wet grab samples are defined in Section 02650 Paragraph 2.2.3 of the Specifications, with consideration for Field Change Notice 052, for each particular perimeter segment. Higher strengths values are required if the measurement is made using wet grab samples. The specifications are based on a correlation between the mean strength of wet grab and core samples, as documented in Field Change Notice 052.

For convenience, the ratio between the measured strength of the CB samples (wet grab or core) and the strength within a CB wall is defined as:

$C_{f\text{-}CB}$ = Strength of Samples / Strength of Wall
$C_{f\text{-}CB}$ = 1.0 if core samples from the CB wall are tested
$C_{f\text{-}CB}$ = 1.1 if wet grab samples from the CB wall are tested

As described below in this Plan, jet grouting may be used to mitigate unaccepted joints or other areas within the CB walls. A different ratio is assumed for assessing the strength of jet grout columns:

$C_{f\text{-}JG}$ = Strength of Samples / Strength of Column
$C_{f\text{-}JG}$ = 1.0 if core samples from the jet grout column are tested
$C_{f\text{-}JG}$ = 1.4 if wet grab samples from the jet grout column are tested

Perimeter Segment	f_{CB} (psi)
1	200
2	200
3	*To be Determined*
4	*To be Determined*
5	*To be Determined*
6A	*To be Determined*
6B	*To be Determined*
7	200
8	200

2. Summary of QC Assessments

QC assessments are made by the Stantec QC Team for the constructed CB wall product based on the following primary criteria as established in the project requirements.

- Horizontal Alignment
- Vertical Alignment
- Bedrock Embedment
- Uniformity (to full depth)
- Strength (unconfined compressive strength)

Multiple deficiencies have been observed to date relative to criteria established for uniformity and strength. These have included misalignments, numerous cold joints, individual wall panels exhibiting low strength values, and several defects (large, unfixated inclusions). A general mitigation approach has been developed for each of these primary categories as outlined below.

3. Alignment and Embedment

Standard procedures are established within the project framework to meet the first three of the QC criteria at the time of construction; thus, reducing the potential for rework. These include the following:

- Staking the approved CB wall panel locations in the field (using appropriate surveying techniques) to establish horizontal alignment, and making field observations to verify that the excavator maintains this alignment during construction.

- Providing a digital level in the excavator cab to establish and maintain vertical alignment during construction.

- Conducting trench soundings during construction to verify that wall elements are extended to full depth, including the minimum required bedrock embedment.

These procedures, when employed properly, have generally proven to work well. However, two wall panels were built at incorrect horizontal alignments during Segment 1 construction. In both cases the panel excavations were not staked in the correct locations (one was a contractor error with off-set staking and the other was a surveyor error). These cases are not typical, and specific mitigation plans to address resulting deficiencies should be developed on a case-by-case basis.

4. Cold Joints

Construction joints, including butt joints and tee joints, that are formed with an existing wall that is older than a specified age (see Section 02650 Paragraph 4.3.8, with consideration for Field Change Notice 054) shall be considered a cold joint, and require mitigation. Two approaches (mitigation panels and jet grout columns) are currently accepted for cold joint mitigation, and are discussed below.

4.1. Mitigation Panels

Section 02650 Paragraph 4.3.8 of the Specifications (with consideration for Field Change Notice 045) describes an approved mitigation approach, wherein an adjacent, overlapping wall panel (patch) is constructed across the defective joint. This patch would effectively double the wall thickness across the joint to the top of bedrock (i.e., no embedment into bedrock). Figures 1A through 1C (attached) present sketches of this concept for a butt joint located along any wall element, and tee joints along the inboard/outboard perimeter walls.

The mitigation panel must be immediately adjacent to and in contact with the vertical face of the existing walls at the cold joint. To account for allowable tolerances in the horizontal location of the constructed walls, the layout and excavator set-up for construction of the mitigation panel shall be established so that a 6-inch overlap is achieved at the start of the

excavation (see Figures 1A through 1C). It is not necessary to maintain the 6-inch overlap cut into the existing wall, and drift of the excavator bucket at depth to follow the face of the existing wall is acceptable.

4.2. QC of Mitigation Elements for Cold Joints - Panels

Construction of these mitigation elements will be observed by the Stantec QC Team to verify that the minimum geometry and depth requirements are met. In a mitigation panel, a minimum of five wet grab samples (currently the preferred method of sampling) shall be collected at various depths (minimum 5 feet apart) from discrete plan locations spaced about 20 feet apart within the constructed patch. The samples shall be molded, cured, and tested in the laboratory for unconfined compressive strength. Test results on core samples obtained from similar locations are also acceptable. Results from these tests shall demonstrate that the mean strength meets or exceeds the same minimum requirement outlined in Section 02650 Paragraph 2.2.3 of the Specifications for each particular perimeter segment.

4.3. Mitigation by Jet Grouting

An alternative mitigation approach, which involves jet grouting in the walls at the location of a cold joint, is acceptable. Key requirements established for this approach are presented in Figures 2A through 2E (attached) and include the following:

- Pre-drill a 12-inch diameter boring into the cold joint to the top of bedrock (i.e., no embedment into bedrock).
- Jet-grout the column from the bottom to the top.
- Alternate the lift/rotation rate to form a series of 12-inch to 14-inch (minimum) column diameters (indicated as D_1 and D_2 in Figures 2D and 2E) in 12-inch tall increments.
- Form two jet-grout columns at each cold joint.
- Vertical tolerance of +/- 1% of plumb for pre-drilled holes that are less than or equal to 50 feet deep.
- Pre-drilled holes that exceed a depth of 50 feet will require a smaller tolerance on verticality, or alternate construction approach, to demonstrate that the pre-drilled holes do not overlap and remain within the CB walls

Specifics for the jet grouting methodology are defined by the Contractor, with acceptance based on the successful completion of a demonstration program.

4.4. QC of Mitigation Elements for Cold Joints – Jet Grouting

Construction of these mitigation elements will be observed by the Stantec QC Team to verify that the minimum geometry and depth requirements are met. A minimum of five wet grab or core samples shall be collected from every fifth jet-grout column.

Calculations for this mitigation approach indicate that the jet grout columns must have a measured, mean strength of at least 227 psi for CB walls with a design strength of 200 psi. To generalize this requirement, the ratio of the required jet grout strength to the CB wall design strength must meet or exceed 1.135. Therefore, the measured, mean strength of the jet grout columns (f_{JG}) must meet the following requirement:

$$f_{JG} \geq 1.135\ C_{f\text{-}JG}\ f_{CB}$$

where $C_{f\text{-}JG}$ is the correlation ratio for jet grout columns (for testing of wet grab or core samples) and f_{CB} is the design strength of the cement-bentonite walls in each particular perimeter segment, both as defined in Section 1.1 above.

Other key QC requirements established for jet grouting mitigation work include the following:

- Verticality surveys shall be performed for each pre-drilled hole installed. Verticality shall be verified along at least two axes. Verticality measurements shall be conducted at regular intervals during the pre-drilling operations and on the completed pre-drilled hole.

- Only grout which has been batched within 2.5 hours shall be injected.

- Samples shall be obtained from 5 discreet depths in each column sampled.

- At least 10% of the columns (or 1 column for every 5 mitigated cold joints) shall be cored to full depth by others.

- Sampling and coring locations will be selected by the QC Manager or TCM.

Acceptance of mitigated cold joints will be based on the strength data from the applicable jet grout columns, CB walls, and column uniformity (based on core logs). The evaluation process of the mitigated cold joints will follow the steps listed below:

1. Core 1 out of 10 columns (1 column out of 5 cold joints)

2. Evaluate the strength of the cold joint with the cored column (CJ 1) based on strength data for the grout and CB walls forming the joint. The uniformity of the entire cold joint mitigation will be based on the core logs and photos from the cored column (the percentage of unacceptable length in the uncored column is assumed to be the same as the percentage of unacceptable length measured in the cored column).

3. If the cored cold joint (CJ 1) is found to be acceptable, then the remaining 4 cold joints (CJ 2 through CJ 5) will also be accepted.

4. If the cored cold joint (CJ 1) is found to be unacceptable, then the remaining 4 cold joints will also be unacceptable. However, the contractor may elect to obtain additional cores from the remaining 4 cold joints to provide additional information to be used in their assessment. If such an approach is taken, then 2 columns from the remaining 4 cold joints, each from a different cold joint, will be cored. Step 2 will be repeated for the additional two cored cold joints (CJ 2 and CJ 3).

5. If the additional cored cold joints (CJ 2 and CJ 3) are found to be acceptable, then the remaining 2 cold joints (CJ 4 and CJ 5) will also be accepted.

6. If at least one of the additional cored cold joints is found to be unacceptable, then the remaining 2 cold joints will also be unacceptable. However, the contractor may elect to obtain additional cores from the remaining 2 cold joints to provide additional information to be used in their assessment. If such an approach is pursued, then 2 columns from the remaining 2 cold joints (CJ 4 and CJ 5), each from a different cold joint, will be cored. Step 2 will be repeated for the final two cored cold joints.

7. Unacceptable cold joints will require mitigation. If re-installation of jet grout columns is the mitigation approach, then acceptance of these cold joints will follow the procedure described in Steps 1 through 6.

At the beginning of full scale production, at least one column from every mitigated cold joint will be cored and evaluated. As determined by the QC Manager, this approach will continue until confidence in the jet grouting construction producing acceptable cold joints has been established.

5. Low Strength

Section 02650 Paragraph 2.2.3 of the Specifications, with consideration for Field Change Notice 052, outlines strength requirements for specimens obtained from the constructed CB walls (for both wet grab and core samples). These requirements establish minimum values for the overall mean, and define the fraction of specimens that must exceed an established value based on the type of sample being tested.

QC documentation (daily field reports prepared by Stantec and Geo-Con) reference multiple wall panels that have experienced significant sloughing or trench collapse from the ground surface. Based on a review of available strength data for Segment 1, it appears that low strengths are generally associated with wall segments that have experienced this type of sloughing (with the exception of the Demonstration Section, TP1 through TP8). When ash (or other soils) collapses into the trench, the collapsed material cannot be removed and becomes dispersed in the slurry, thereby leading to weaker conditions when cured. Therefore, it is assumed that for wall panels where significant sloughing is observed, these will be considered defective and will require mitigation.

TVA and/or the Contractor has the option to obtain additional wet grab samples during construction (prior to curing) and/or core samples (following curing) for subsequent unconfined compressive strength testing. Results may be used in combination with other QC data to isolate defective portions of a wall from the remainder (as opposed to simply applying the assumption outlined above). If pursued, recommended wet grab sampling protocols for this purpose are outlined below.

5.1. Mitigation Panels

Section 02650, Paragraph 4.9.2 of the Specifications describes general mitigation elements (summarized below) that may be considered by the Contractor while developing mitigation plans to address this deficiency.

- Remove, remix, or otherwise reconstruct the defective wall section.

- Increase the effective thickness of the defective wall sections, by constructing adjacent, overlapping wall panels (i.e., reinforcement) or by installing new, adjacent walls.

- Install additional shear walls and/or reduce the spacing between the shear walls.

The first of these mitigation elements consider removal and replacement of a defective wall section through reconstruction. This approach may be used by the Contractor, however, remixing (or removal of a wall prior to curing) appears to be ineffective with CB walls, because the unsatisfactory slurry cannot be removed. In addition, reconstruction of defective walls after curing will likely lead to the creation of cold joints, which must also be mitigated.

Reinforcement, accomplished through the construction of adjacent, overlapping wall panels, may be installed across the defective wall. These are defined as parallel panels constructed along the defective portion of the wall and to full depth (i.e., embedded into bedrock). The mitigation panel(s) must extend beyond both ends of the defective wall for a distance of at least twice the effective thickness of the wall, as applicable. Figures 3A through 3F (attached) present sketches of this concept for a typical wall element.

Two adjacent, overlapping mitigation panels are required on both sides of a low-strength, defective area in a wall (Figures 3A and 3B) if all of the following occur:

- The defective area occurs in a shear wall.

- The total vertical height of the defective area is greater than two-thirds the height of the shear wall, exclusive of the rock embedment zone.

- The horizontal length of the mitigation panel is less than the full length of the shear wall with the defect(s).

For all other cases, a single adjacent, overlapping mitigation panel is acceptable. The mitigation panel(s) must be immediately adjacent to and in contact with the vertical face of the existing wall with the defect. To account for allowable tolerances in the horizontal location of the constructed walls, the layout and excavator set-up for construction of the mitigation panel shall be established so that a 6-inch overlap is achieved at the start of the excavation (see Figures 3A, 3B, 3E, and 3F). It is not necessary to maintain the 6-inch overlap cut into the existing wall, and drift of the excavator bucket at depth to follow the face of the existing wall is acceptable. Where defects extend the entire length of an existing wall (e.g., along a shear wall or a buttress wall), the mitigation panel would represent new wall construction. In this case, the new wall should be constructed adjacent to the existing wall and no initial overlap between the walls is required (this is depicted for a shear wall in Figure 3C and a buttress wall in Figure 3D).

For cases where the overall wall exhibits low strength (not necessarily associated with individual panels and/or isolated portions of the wall), mitigation may consist of constructing additional shear walls as shown in the sketch provided as Figure 4. This approach effectively increases the area replacement ratio within the subject footprint, with the resulting composite section meeting the design intent. The additional walls also greatly reduce the horizontal distance between lateral supports for the perimeter walls, such that additional

mitigation of low-strength perimeter walls is not needed. It is noted that this condition (and associated mitigation approach) is similar to that implemented for the Demonstration Section.

5.2. QC of Mitigation Elements

Construction of these mitigation elements will be observed by the Stantec QC Team to verify that the minimum geometry and depth requirements are met. A minimum of five wet grab samples (currently the preferred method of sampling) shall be collected at various depths (minimum 5 feet apart) from discrete plan locations spaced about 20 feet apart within each constructed patch. The samples shall be molded, cured, and tested in the laboratory for unconfined compressive strength. Test results on core samples obtained from similar locations are also acceptable. Results from these tests shall demonstrate that the mean strength meets or exceeds the same minimum requirement outlined in Section 02650 Paragraph 2.2.3 of the Specifications for each particular perimeter segment. Coring shall be conducted at representative locations (to be determined on a case-by-case basis) within the mitigation elements. This coring shall be done in accordance with Section 02650 Paragraph 4.8.2 of the Specifications. The QC Team will observe the recovered core samples and review the core logs to verify that established criteria relative to uniformity are met.

6. Defects

Defects are non-fixated material inclusions within a constructed CB wall that are greater than half the effective thickness of the wall, as defined in Section 02650 Paragraph 2.2.1 of the Specifications. Relative to established criteria for uniformity, defects that are discovered through coring or other direct observations must be mitigated.

For the purposes of this document, defects have been placed within two general categories (“pocket” or “linear”). Pocket defects are classified as relatively isolated inclusions, meeting the above definition, that are observed within individual core holes and not the adjacent borings within a subject wall element. Linear defects are classified as continuous inclusions, also meeting the above definition, that are observed within a minimum of two adjacent core holes.

6.1. Pocket Defects – Mitigation by Wall Panels

Mitigation for pocket defects may be accomplished through the construction of adjacent, overlapping wall panels, across the defect. These are defined as parallel panels constructed along the defective portion of the wall. Figures 5A and 5B (attached) present sketches of this concept for a typical pocket defect. The mitigation panel(s) must extend below and to both sides of the defect for a distance of at least twice the effective thickness of the wall, as applicable. To achieve the requirement for depth below the defect, the bottom of the patch may require full bedrock embedment, but the bedrock embedment does not need to exceed that constructed for the existing wall.

Two adjacent, overlapping mitigation panels (on both sides of a wall) are required with a pocket defect (Figures 3A and 3B) if all of the following occur:

- The pocket defect occurs in a shear wall.
- The vertical height of defect(s) at that location, determined as the summation of all defects in a core hole, is greater than two-thirds the height of the shear wall, exclusive of the rock embedment zone.

- The horizontal length of the mitigation panel is less than the full length of the shear wall with the defect(s).

For all other cases, a single adjacent, overlapping mitigation panel is acceptable.

The mitigation panel(s) must be immediately adjacent to and in contact with the vertical face of the existing walls at the defect. To account for allowable tolerances in the horizontal location of the constructed walls, the layout and excavator set-up for construction of the mitigation panel shall be established so that a 6-inch overlap is achieved at the start of the excavation (see Figure 5A). It is not necessary to maintain the 6-inch overlap cut into the existing wall, and drift of the excavator bucket at depth to follow the face of the existing wall is acceptable.

6.2. Linear Defects – Mitigation by Wall Panels

Mitigation for linear defects may be accomplished through the construction of adjacent, overlapping wall panels, as described above for pocket defects. Figures 5C and 5D (attached) present sketches of this concept for a typical wall element. For mitigation panels that would extend the entire length of the existing wall (e.g., along a shear wall or a buttress wall), this would represent new wall construction. In this case, the new wall may be constructed immediately adjacent to the existing wall (to either side) and no initial overlap between the walls is required.

6.3. QC of Mitigation Elements – Wall Panels

Construction of these mitigation elements will be observed by the Stantec QC Team to verify that the minimum geometry and depth requirements are met. A minimum of five wet grab samples (currently the preferred method of sampling) shall be collected at various depths (minimum 5 feet apart) from discrete plan locations spaced about 20 feet apart within each constructed patch. The samples shall be molded, cured, and tested in the laboratory for unconfined compressive strength. Test results on core samples obtained from similar locations are also acceptable. Results from these tests shall demonstrate that the mean strength meets or exceeds the same minimum requirement as outlined in Section 02650 Paragraph 2.2.3 of the Specifications for each particular perimeter segment.

Coring shall be conducted at representative locations (to be determined on a case-by-case basis) within the mitigation elements. This coring shall be done in accordance with Section 02650 Paragraph 4.8.2 of the Specifications. The QC Team will observe the recovered core samples and review the core logs to verify that established criteria relative to uniformity are met.

6.4. Defects – Mitigation by Jet Grouting

6.4.1. General Description

Mitigation for defects, either pocket or linear, may be accomplished by jet grouting within and across the defective area. This would involve first drilling pilot holes through the defect, along the centerline of the defective length of the wall. Grouting would proceed from the bottom of the hole upward, with the injected grout cutting and mixing with the in-place materials to form one or more columns of overlapping, solidified material. The grouting parameters (grouting pressure, nozzle rotation rate, lifting rate, etc.) shall be controlled to achieve the desired

minimum column diameter. The appropriate grouting parameters shall be established through a field demonstration test.

Figures 5E and 5F (attached) present sketches and key requirements for this mitigation concept. The jet grouted columns must extend below and above the defective area for a vertical distance not less than the effective thickness of the CB wall, as applicable. However, the jet grout columns are not required to extend deeper than the base of the previously excavated bedrock embedment of the existing wall. The spacing between the pilot holes will be set so that the grouted material from adjacent columns will overlap per the design requirements (see requirements for column spacing in Section 6.4.3).

6.4.2. Column Spacing and Layout

The maximum acceptable column spacing (center-center spacing of the pilot holes) depends on the design diameter and design strength of the jet grouted column. The maximum allowable spacing may be computed as:

$$s_{JG} \leq \sqrt{d_{JG}^2 - \left(\frac{f_{CB}}{f_{JG}}\right) t_{CB}^2 - 1} \ (feet)$$

where:

s_{JG} = center-to-center spacing of adjacent jet grout columns (in feet)
d_{JG} = design diameter of the jet grout columns (in feet)
t_{CB} = effective thickness of the cement bentonite walls (4.0 feet)
f_{JG} = design, mean unconfined compression strength for the jet grout columns (as measured with core samples)
f_{CB} = design, mean unconfined compression strength for the cement bentonite walls (as defined in Section 1.1 for each particular perimeter segment)

Where overlapping columns are built in a series to mitigate a defective area, the center-center spacing of the jet grout columns (s_{JG}) must be constant (uniform) throughout the group. Furthermore, the centers of the first and last columns within the overlapping group must be located no more than one half of the column spacing ($\leq s_{JG}/2$) from the defined horizontal limits of the defective area.

6.4.3. Minimum Column Strength

The mean strength of the cured jet grout columns (f_{JG}) shall not be less than the design mean strength of the cement-bentonite walls:

$$f_{JG} \geq C_{f\text{-}JG}\, f_{CB}$$

Here, $C_{f\text{-}JG}$ is the correlation ratio for jet grout columns (for testing of wet grab or core samples) and f_{CB} is the design strength of the cement-bentonite walls in each particular perimeter segment, both as defined in Section 1.1 above.

The QC assessment for jet grout column strength will occur after constructing the columns at a selected spacing. Hence, it is convenient to determine the required strength as a function

of the column spacing. This can be accomplished by re-arranging the equation in Section 6.4.2 and introducing the correlation ratio ($C_{f\text{-}JG}$):

$$f_{JG} \geq C_{f-JG}\left(\frac{t_{CB}^2}{d_{JG}^2 - s_{JG}^2 - 1}\right) f_{CB}$$

6.4.4. Formation of Cold Joints

Where a jet grout column abuts to solid, cured CB material, the jetting process will cut away uncemented soil to produce a direct interface between the cured CB and the stronger grout. The column face will also exhibit variations in diameter along the height, with these irregularities contributing to the shearing resistance of the interface. Given these considerations, the vertical interface between a jet grout column (in a defect) and an existing CB wall will not be considered a new cold joint. However, if the height of the jet grout column is greater than three-fourths the height of the CB wall, then the newly created interface will be classified as a cold joint and require mitigation (Section 4). Hence:

- Jet grouting of defects, accomplished in accordance with the requirements of Section 6.4, will not be accepted as a substitute for cold joint mitigation by jet grouting (with steps in the column diameter), as described in Section 4.3.

- If a defect is mitigated by jet grouting, and the first or last jet grout column exceeds three-fourths the height of the CB wall, then the vertical interface between the jet grout column and the CB wall will be classified as a cold joint that requires further mitigation.

- In all other cases, mitigation of a defect by jet grouting will not result in the classification of new or additional cold joints.

6.4.5. Delineation of Defect Area to be Jet Grouted

Drilling of the pilot holes for jet grouting provides an opportunity to better delineate the defective area within a wall. Using data from both the QC core holes in the CB wall and pilot holes drilled for the jet grouting operations, the QC Manager will define the vertical and horizontal limits for jet grouting mitigation in a particular defect.

If utilized, samples obtained from the pilot holes shall be of sufficient quality to distinguish between solidified CB material and unfixated soils. Intact cores are not required, but drill cuttings are unacceptable. Drilling methods, including sonic drilling methods, that can retrieve continuous samples of soil and broken pieces of CB wall are acceptable. The recovery of samples is required only from those pilot holes used to delineate the jet grouting area. Samples obtained from the pilot holes shall be retained for logging by the QC Manager, and then discarded at the site.

As an alternative to retrieving samples from the pilot holes, additional QC core holes may be advanced to delineate the jet grouting zone. In this case, coring shall be done in accordance with Section 02650 Paragraph 4.8.2 of the Specifications.

The number and location of holes required to delineate the zone requiring jet grout mitigation shall meet the following minimum requirements:

- The horizontal spacing between sample holes shall not exceed 25 feet.
- For defects in any shear wall, a minimum of 3 sample holes is required.
- For defects in any buttress wall, a minimum of 1 sample hole is required.
- For defects in an inboard or outboard perimeter wall, a minimum of 3 sample holes per 100 feet of perimeter wall is required.
- These requirements can be met with any combination of QC core holes and pilot holes with samples.
- The QC Manager shall select the plan locations for these holes.

6.4.6. Jet Grouting Construction

Pilot holes shall be advanced to depth to within +/- 1% of vertical (plumb). During drilling of the pilot holes, verticality of the drill rods shall be verified using a digital hand level. Measurements shall be taken upon setup and at 10-foot intervals during drilling.

The diameter of the formed jet grout columns cannot be measured directly. Therefore, the formed diameter will be accepted on the basis of the measured grouting pressure, rotation and lifting rate of the grouting tools, and other construction parameters as appropriate. Acceptable grouting parameters will be established through a demonstration test program in similar soil deposits near the project site. Jet grout columns formed in the test program will be excavated and measured, to objectively determine the minimum grout column formed with a given combination of grouting parameters. The Contractor will prepare a plan for the field test program for review by the QC Manager and approval by the TCM.

During construction of the jet grout columns, grout return at the ground surface may be collected as wet grab samples for QC testing.

6.5. QC of Mitigation Elements – Jet Grouting

Construction of these mitigation elements will be observed by the Stantec QC Team to verify that the minimum geometry and depth requirements are met. From each mitigation element (one or more overlapping jet grout columns built to mitigate a defined defect), a minimum of 5 samples shall be collected for strength testing. Wet grab samples shall be molded, cured, and tested in the laboratory for unconfined compressive strength. If desired, core samples may also be tested for strength. The mean strength of the jet grout column core or wet grab samples must achieve a mean unconfined compressive strength not less than the values specified in Section 6.4.3 above.

Following construction, core holes will be advanced through the mitigated area to verify uniformity (consistent with established criteria for the CB walls) and full mixing within the grout columns. Core holes will be located midway between adjacent pilot holes, to allow an evaluation of the overlap area between jet grout columns. Coring shall be conducted at representative locations (to be determined on a case-by-case basis) within the mitigation elements. This coring shall be done in accordance with Section 02650 Paragraph 4.8.2 of the Specifications. The QC Team will observe the recovered core samples and review the core logs to verify that established criteria relative to uniformity are met.

Key QC requirements established for jet grouting mitigation work include the following:

- Verticality measurements shall be performed along two axes for each pilot hole installed, and reported in percent from plumb to the nearest tenth of a percent. Verticality measurements shall be conducted prior to the start of drilling operations and at 10-foot intervals thereafter.

- Only grout which has been batched within the timeframe defined by the Contractor's QC Plan shall be injected.

- At least 5 wet grab samples, and no less than 5 samples per 20 lineal feet, shall be obtained for strength testing from each jet grout mitigation (one or more overlapping jet grout columns built to mitigate a defined defect), within each defective CB wall. Wet grab samples may be obtained from multiple columns comprising the mitigation panel. Wet grab samples obtained from any given column shall be from discreet depths (minimum 2 feet apart or an alternative interval approved by the QC Manager). If mitigation for a defective CB wall is conducted over multiple days, samples shall be obtained from each day of construction. Tests on core samples, obtained from similar locations, are also acceptable for the assessment of column strength.

- At least one core hole, and no less than one core hole per 50 lineal feet, shall be advanced to full depth within each jet grout mitigation area to assess uniformity.

- Core holes will be located midway between adjacent pilot holes, to allow an evaluation of the overlap area between jet grout columns.

- Where jet grouting is used to mitigate defective areas that are too small to obtain the minimum number of strength samples and/or core holes, the QC Manager may reduce or waive the above requirements.

- Sampling and coring locations will be selected by the QC Manager or TCM.

7. Additional Sampling

TVA and/or the Contractor have the option to obtain additional wet grab and/or core samples for subsequent unconfined compressive strength testing. Results may be used in combination with other QC data to isolate defective portions of a wall element. Strength tests on these additional samples may provide the needed evidence to define shorter lengths of non-conforming walls that require mitigation.

If pursued, the additional wet grab samples must be collected and stored in general accordance with the criteria outlined in Section 02650 Paragraph 4.8.1 of the Specifications. Specifically, a minimum of five wet grab samples shall be collected at various depths (minimum 5 feet apart) from discrete plan locations spaced about 20 feet apart. These additional samples would be acquired from the associated walls outside of the defined test parcel.

There would be no need to test these additional samples at varying curing periods. Hence, rather than forming four specimens from each sample (as required in the Specifications for

the designated test parcels) only one specimen would need to be molded and cured from each wet grab sample. The additional specimens would be tested only if the test parcel samples exhibited low strengths, and there was a desire to isolate the extents of the defective area. Once a test parcel has demonstrated compliance with the project requirements and has been approved by the TCM, these additional samples could be discarded without testing.

8. Buttress Wall Damage/Defects

During construction of the rock berm (located between and over the buttress walls), damage may occur during excavation and/or defects (non-fixated material inclusions meeting the definition stated above) may be observed in the completed buttress walls and outboard perimeter wall. Individual QC assessments to determine whether these issues require mitigation (for discrete wall sections) will be made relative to criteria defined below.

8.1. Reference Line for Buttress Wall Damage

Engineering analyses conducted by Stantec indicate that the structural capacity of the completed buttress walls and outboard perimeter wall is compromised where damage and/or defects are realized in critical zones. Critical areas are defined as those portion(s) of the outboard perimeter and buttress walls located below a reference line(s) defined as:

- A horizontal line along the top of the outboard perimeter wall.
- A straight line extending from the top of the outboard perimeter wall (along its outboard face) to a point located seven feet below the top of the buttress wall at its outboard limits as defined on the design drawings as L_b (see Figures 6A and 6B).
- In each case, the top of wall refers to the design top of wall elevation as shown on the Design drawings.

Damage and/or defects in the outboard perimeter wall or the buttress walls observed above these reference lines do not require mitigation. Below the reference lines defined in the previous paragraph, defects, significant fractures, or other visible damage will require mitigation. In general, mitigations must result in an acceptable wall up to the limits of the reference lines defined in the previous paragraph.

8.2. Mitigation Methods

A specific mitigation plan has been developed by the project team to address damages and defects to the cement-bentonite walls encountered or created during ash removal and rock placement between the buttress walls. In general, the mitigation work will include:

- Removal of loose and damaged pieces of the buttress wall, with loose material removed from the exposed joint.
- At a minimum, the design dimensions of the buttress walls shall be re-established through the placement of cement-bentonite slurry (or similar material of equal or better strength). The use of temporary or sacrificial formwork is anticipated to aid in this process.

Due to the variable nature and extent of potential deficiencies that may occur, specific mitigation criteria may be modified by the EOR on a case-by-case basis.

For large-scale damage, complete replacement of a damaged buttress wall may be required down to a defined limit or elevation. For this potential case, two general mitigation alternatives have been developed. As depicted in Figures 6C and 6D (attached), these approaches would involve a replacement section with or without shear pins:

- Alternative 1. The damaged portions of the buttress wall are removed. The exposed surface of the wall (construction joint between the old and new material) is cleaned to remove all loose or fractured CB material. Using formwork, the buttress wall is then rebuilt using cement-bentonite slurry (or similar material of equal or better strength) to the required minimum dimensions.

- Alternative 2. This approach is the same as Alternative 1, except that shear pins (grout columns) are used to connect the wall across the construction joint. If all loose or fractured material is not removed and approved, then grout columns will be required across the construction joint to connect the new material to the older wall sections. The grout columns will be formed, after the new slurry has cured, by drilling 12-inch diameter vertical columns and tremie grouting to full depth.

The specific dimensions and requirements for each approach will depend on the location and dimensions of the damaged wall. For the purposes of illustration, Figures 6C and 6D depict an example configuration, for an assumed 10-ft deep replacement of a buttress wall. The column spacing and depth requirements will depend on the actual dimensions of the damaged section of the buttress wall; accordingly, the required dimensions (spacing and depth) will be determined by the EOR on a case by case basis. Hence, a specific mitigation plan will be developed and approved prior to the repair of a buttress wall using either of these approaches.

8.3. QC of Mitigation Elements

Construction of any mitigation elements to address buttress wall deficiencies will be observed by the Stantec QC Team to verify that the minimum mitigation criteria are met. Sampling and testing requirements will be dependent on the actual construction performed and will be determined on a case-by-case basis. However, key QC requirements established for the previously discussed mitigation alternatives for large scale damage to the buttress walls include the following:

- The exposed surface (construction joint) of the remaining buttress wall will be cleaned of loose or fractured cement-bentonite material, soil, ash, and other debris, prior to the installation of formwork. If the surface is cleaned and approved by the QC Manager and TCM, shear pins (Alternative 2) may not be required for the repair.

- Verticality tolerance of +/- 1% of plumb is required for drilled holes. Verticality surveys will be performed for each drilled hole installed. Verticality shall be verified along at least two axes. Verticality measurements will be conducted at regular intervals during the pre-drilling operations and on the completed drilled hole.

- The strength criteria established in Section 02650 Paragraph 2.2.3 of the Specifications for a particular perimeter segment shall apply to the replaced section of the buttress wall in that same segment. For grab samples, a minimum of five samples shall be collected at various depths (minimum 2 feet apart) from discrete plan locations within the replaced buttress wall. The samples shall be molded, cured, and tested in the laboratory for unconfined compressive strength. For core samples, a minimum of five samples shall be collected at various depths (minimum 2 feet apart) from discrete plan location(s) within the replaced buttress wall. A minimum of five samples shall be collected from at least one grout column of the buttress wall mitigation. The sampled column and sampling locations shall be determined by the QC Manager or TCM. The mean strength of the grout column samples must achieve a mean unconfined compressive strength not less than $C_{f\text{-}JG}$*240 psi, where $C_{f\text{-}JG}$ is defined in Section 1.1 for core or wet grab samples from the jet grout columns.

Attachments

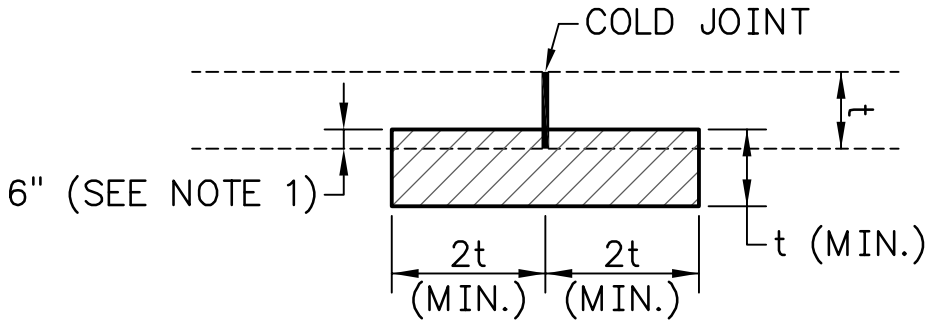

FIGURE 1A – BUTT JOINT

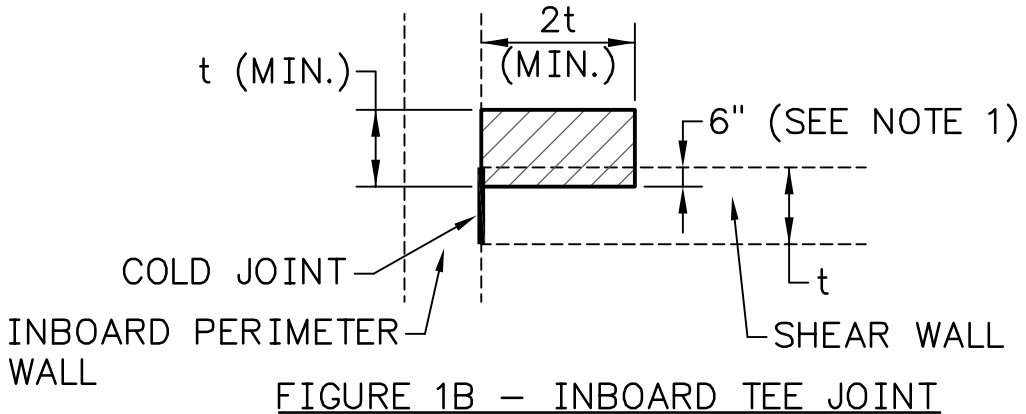

FIGURE 1B – INBOARD TEE JOINT

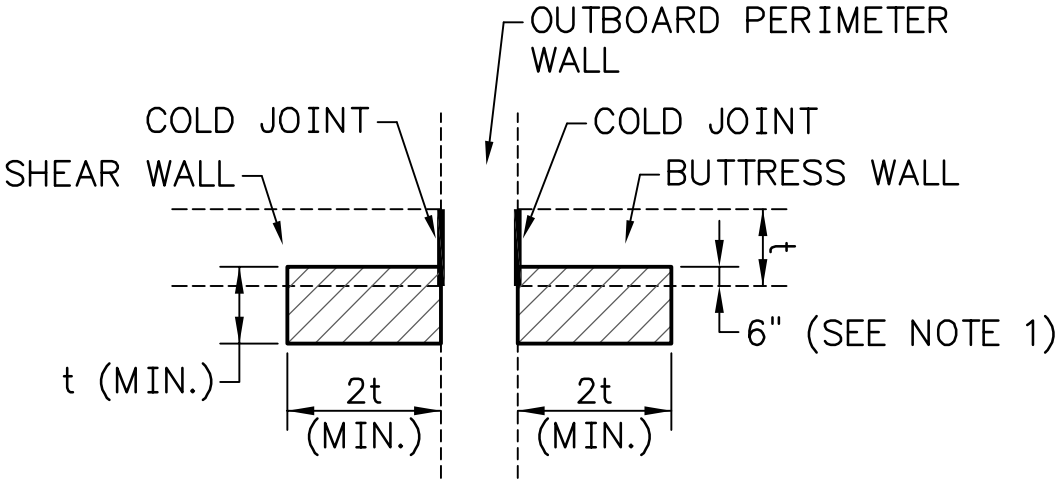

FIGURE 1C – OUTBOARD TEE JOINT (2 COLD JOINTS)

NOTES:

1. THE LAYOUT AND EXCAVATOR SET-UP FOR CONSTRUCTION OF THE MITIGATION PANEL SHALL BE ESTABLISHED SO THAT A 6-INCH OVERLAP IS ACHIEVED AT THE START OF THE EXCAVATION.

2. WHERE A PANEL IS USED TO MITIGATE A COLD JOINT, ROCK EMBEDMENT IS NOT REQUIRED FOR THE NEW PANEL.

REV 0

PERIMETER WALL STABILIZATION
COLD JOINT MITIGATION
BY PANEL CONSTRUCTION

PLOT DATE: 01/18/2012 USER: CLINKENBEARD, ADAM
V:\1756\ACTIVE\175661008\ENVIRONMENTAL\DRAWING\SHEET_FILES\PANEL_MIT\REV_0\FIG_1A_1B_1C_R0.DWG

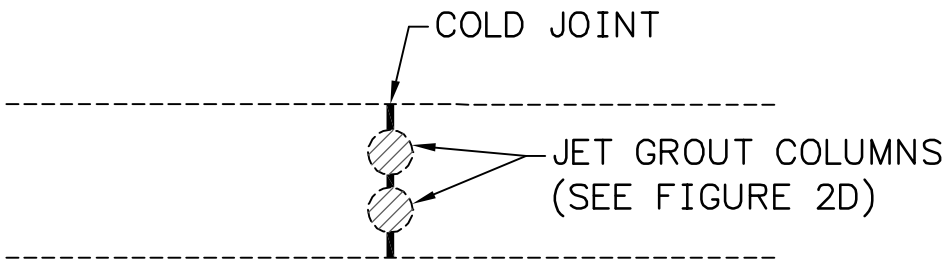

FIGURE 2A – BUTT JOINT

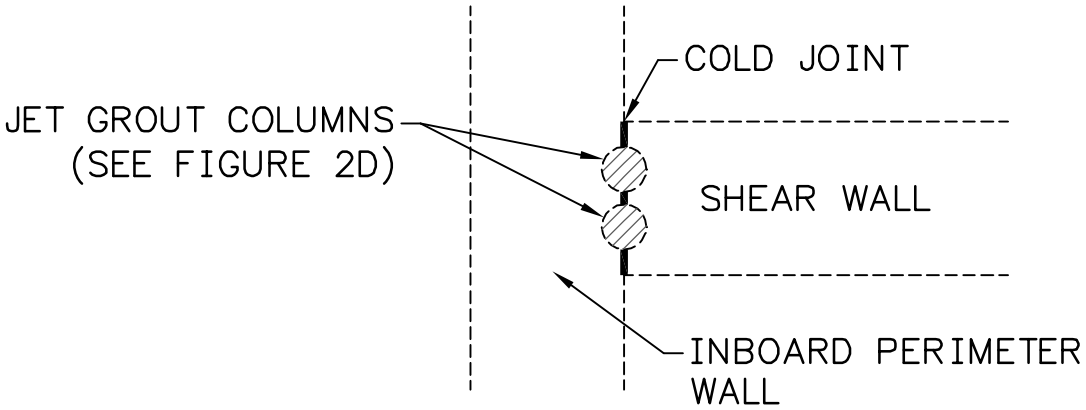

FIGURE 2B – INBOARD TEE JOINT

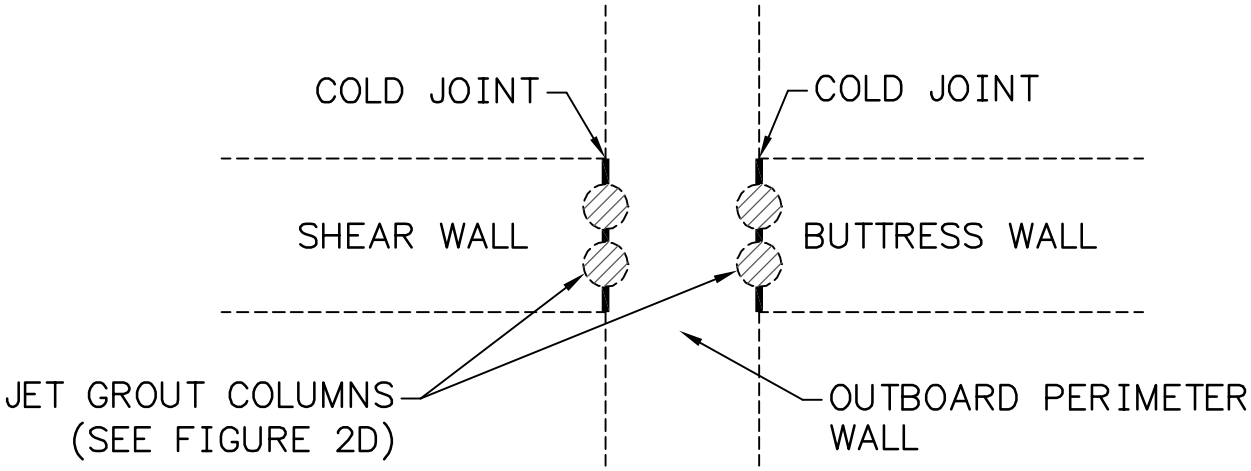

FIGURE 2C – OUTBOARD TEE JOINT (2 COLD JOINTS)

REV 1

PERIMETER WALL STABILIZATION
COLD JOINT MITIGATION
BY JET GROUTING

PLOT DATE: 04/09/2012 USER: ELLISON, DOC
V:\7756\ACTIVE\175661008\ENVIRONMENTAL\DRAWING\SHEET_FILES\PANEL_MIT\REV_1\FIG_2A_2B_2C_R1.DWG

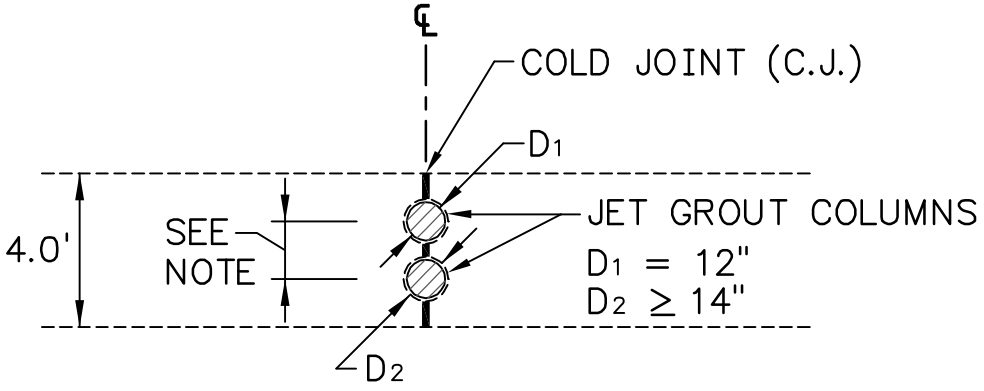

FIGURE 2D – PLAN

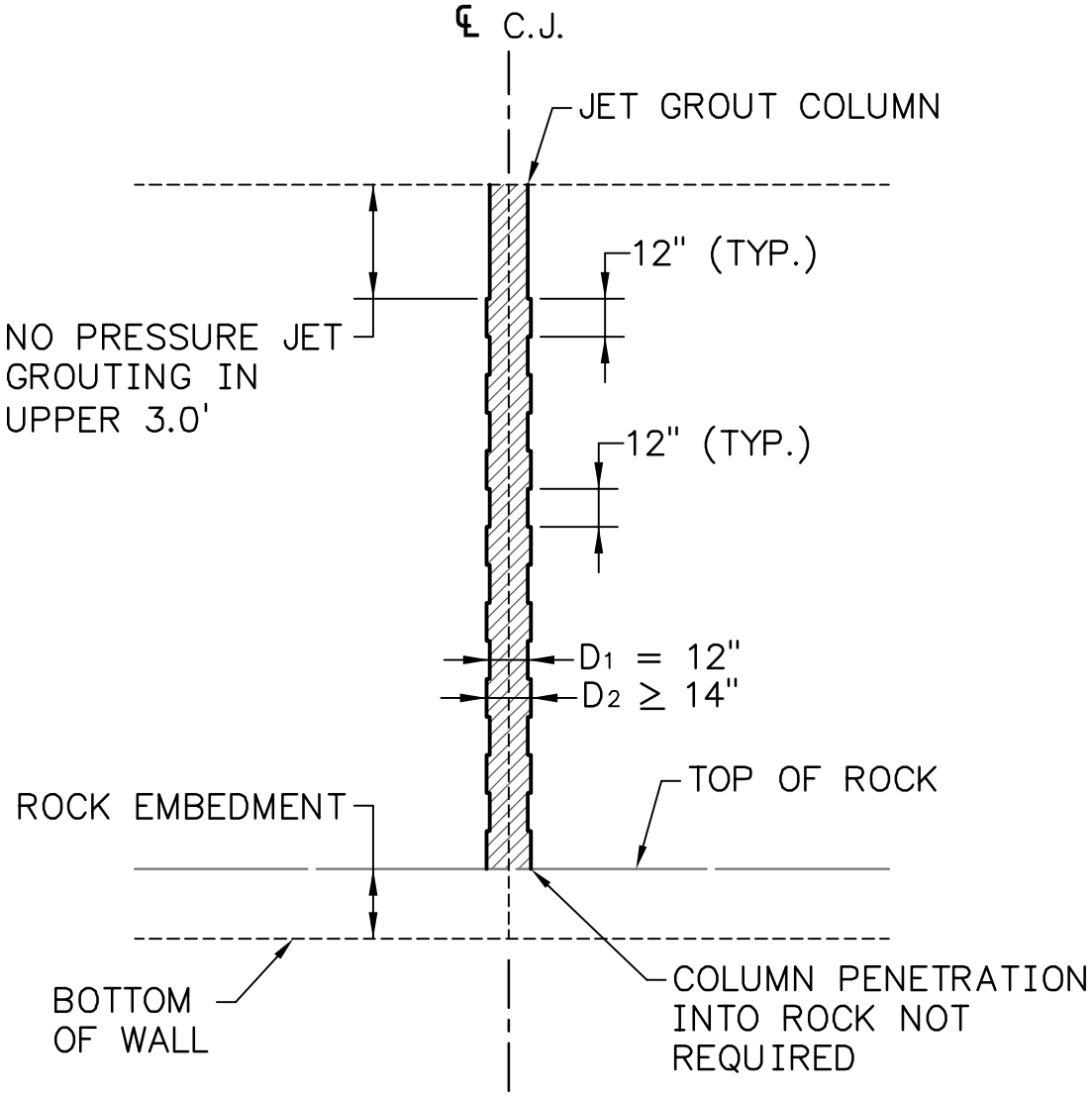

FIGURE 2E – SECTION

NOTE:
COLUMN SPACING SHALL BE DEFINED
IN APPROVED SHOP DRAWINGS.

PERIMETER WALL SPABILIZATION
COLD JOINT MITIGATION
BY JET GROUTING

REV 1

PLOT DATE: 04/05/2012 USER: ELLISON, DOC
V:\1756\ACTIVE\175661008\ENVIRONMENTAL\DRAWING\SHEET_FILES\PANEL_M17\REV_1\FIG_2D_2E_R1.DWG

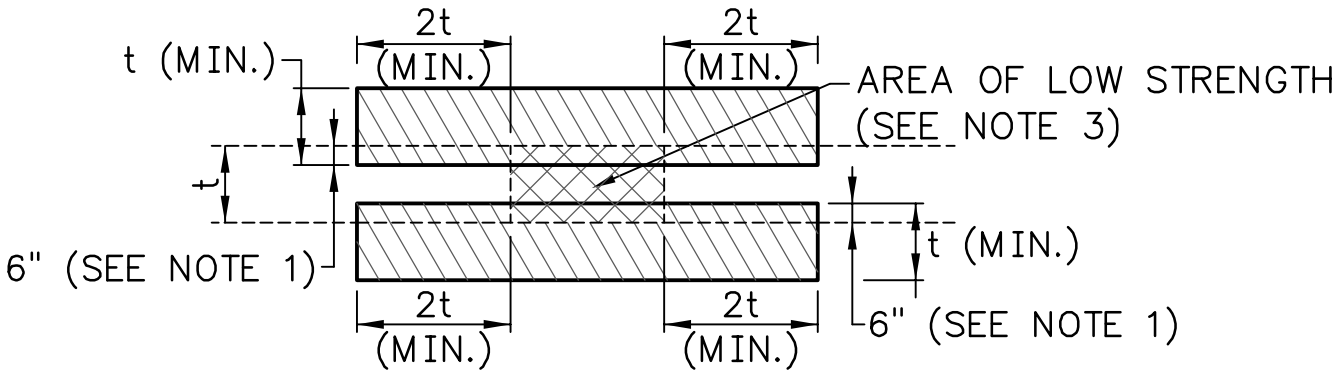

FIGURE 3A – SHEAR WALLS

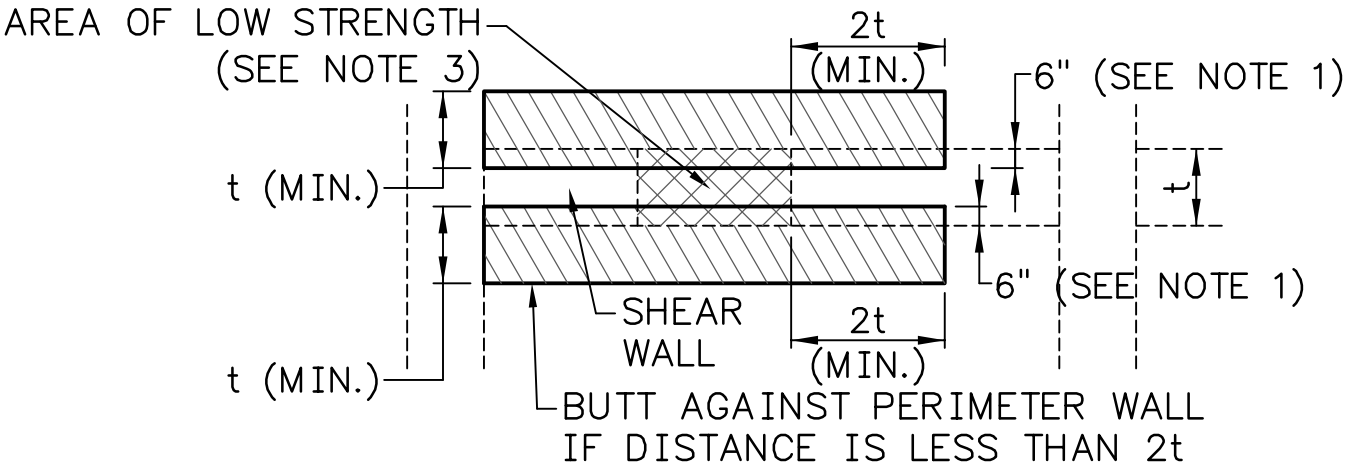

FIGURE 3B – SHEAR WALLS

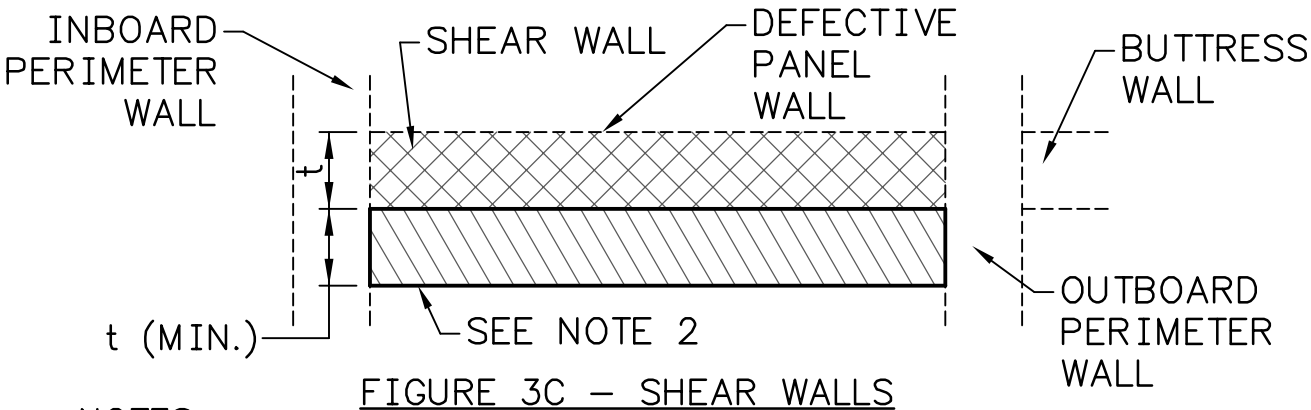

FIGURE 3C – SHEAR WALLS

NOTES:

1. THE LAYOUT AND EXCAVATOR SET-UP FOR CONSTRUCTION OF THE MITIGATION PANEL SHALL BE ESTABLISHED SO THAT A 6-INCH OVERLAP IS ACHIEVED AT THE START OF THE EXCAVATION.

2. WHERE A PANEL IS USED TO MITIGATE A DEFECTIVE WALL, ROCK EMBEDMENT IS REQUIRED TO THE SAME OR GREATER DEPTH THAT IS REQUIRED FOR THE DEFECTIVE WALL.

3. MITIGATION PANELS ARE REQUIRED ON BOTH SIDES OF A SHEAR WALL IF THE HEIGHT OF THE DEFECTIVE AREA IS GREATER THAN TWO-THIRDS THE HEIGHT OF THE WALL AND THE MITIGATION PANELS ARE LESS THAN THE FULL LENGTH OF THE SHEAR WALL.

PERIMETER WALL STABILIZATION
STRENGTH MITIGATION
BY PANEL CONSTRUCTION

REV 1

PLOT DATE: 04/05/2012 USER: ELLISON, DOC
V:\7756\ACTIVE\175661008\ENVIRONMENTAL\DRAWING\SHEET_FILES\PANEL_MIT\REV_1\FIG_3A_3B_3C_R1.DWG

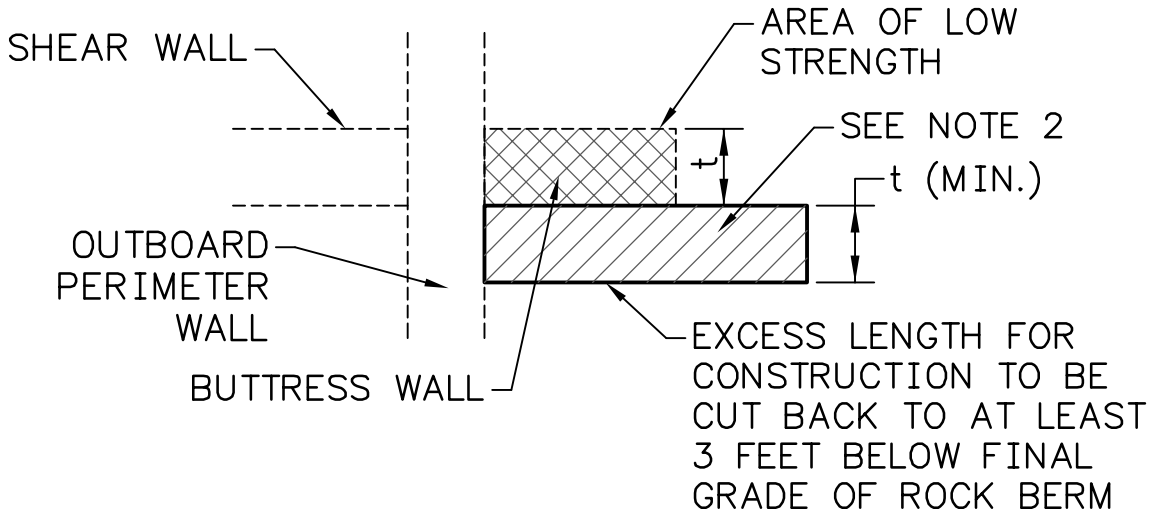

FIGURE 3D – BUTTRESS WALL

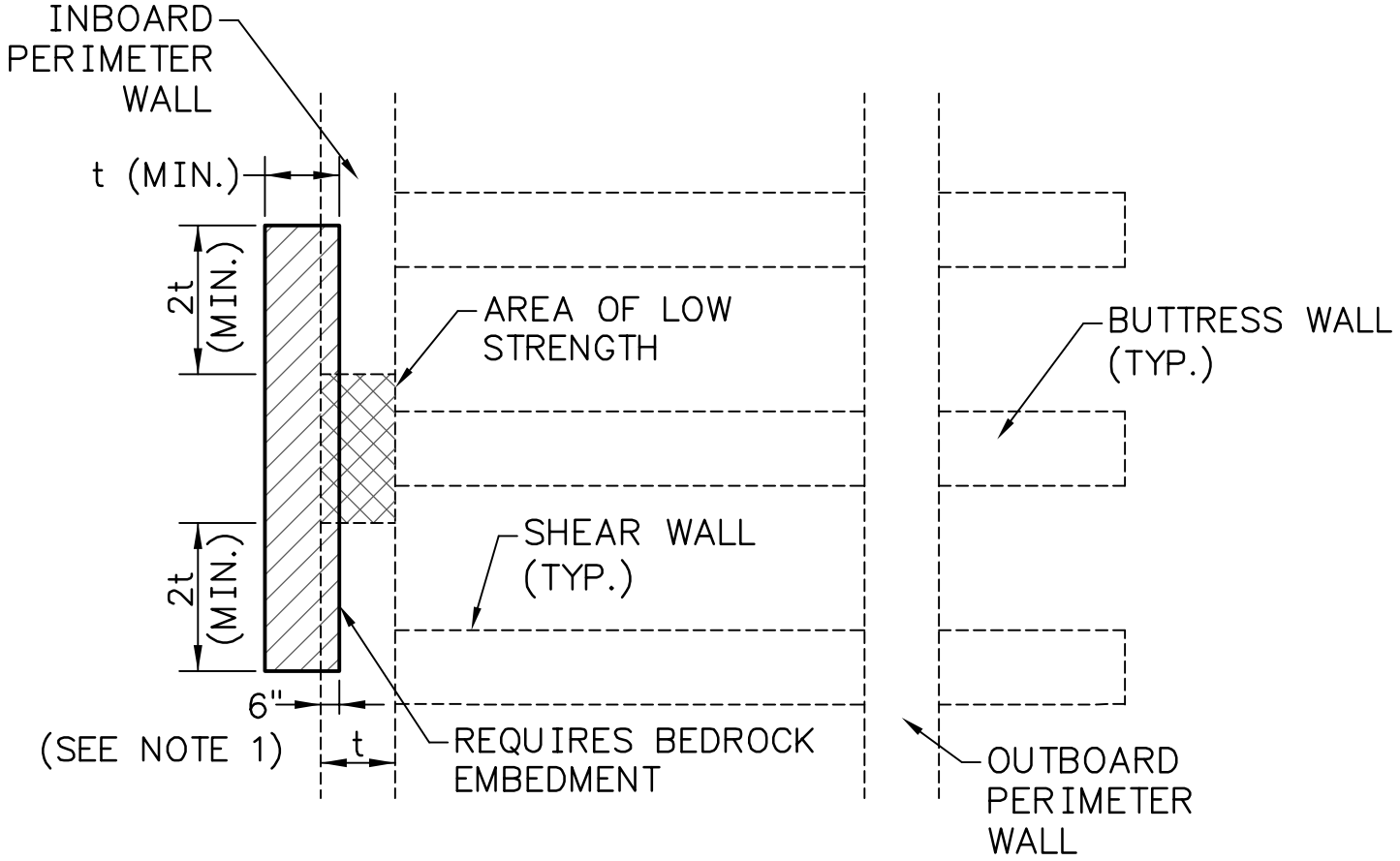

FIGURE 3E – INBOARD PERIMETER WALL

NOTES:

1. THE LAYOUT AND EXCAVATOR SET-UP FOR CONSTRUCTION OF THE MITIGATION PANEL SHALL BE ESTABLISHED SO THAT A 6-INCH OVERLAP IS ACHIEVED AT THE START OF THE EXCAVATION.

2. WHERE A PANEL IS USED TO MITIGATE A DEFECTIVE WALL, ROCK EMBEDMENT IS REQUIRED TO THE SAME OR GREATER DEPTH THAT IS REQUIRED FOR THE DEFECTIVE WALL.

REV 1

PERIMETER WALL STABILIZATION
STRENGTH MITIGATION
BY PANEL CONSTRUCTION

PLOT DATE: 04/05/2012 USER: ELLISON, DOC
V:\7756\ACTIVE\175661008\ENVIRONMENTAL\DRAWING\SHEET_FILES\PANEL_MIT\REV_1\FIG_3D_3E_R1.DWG

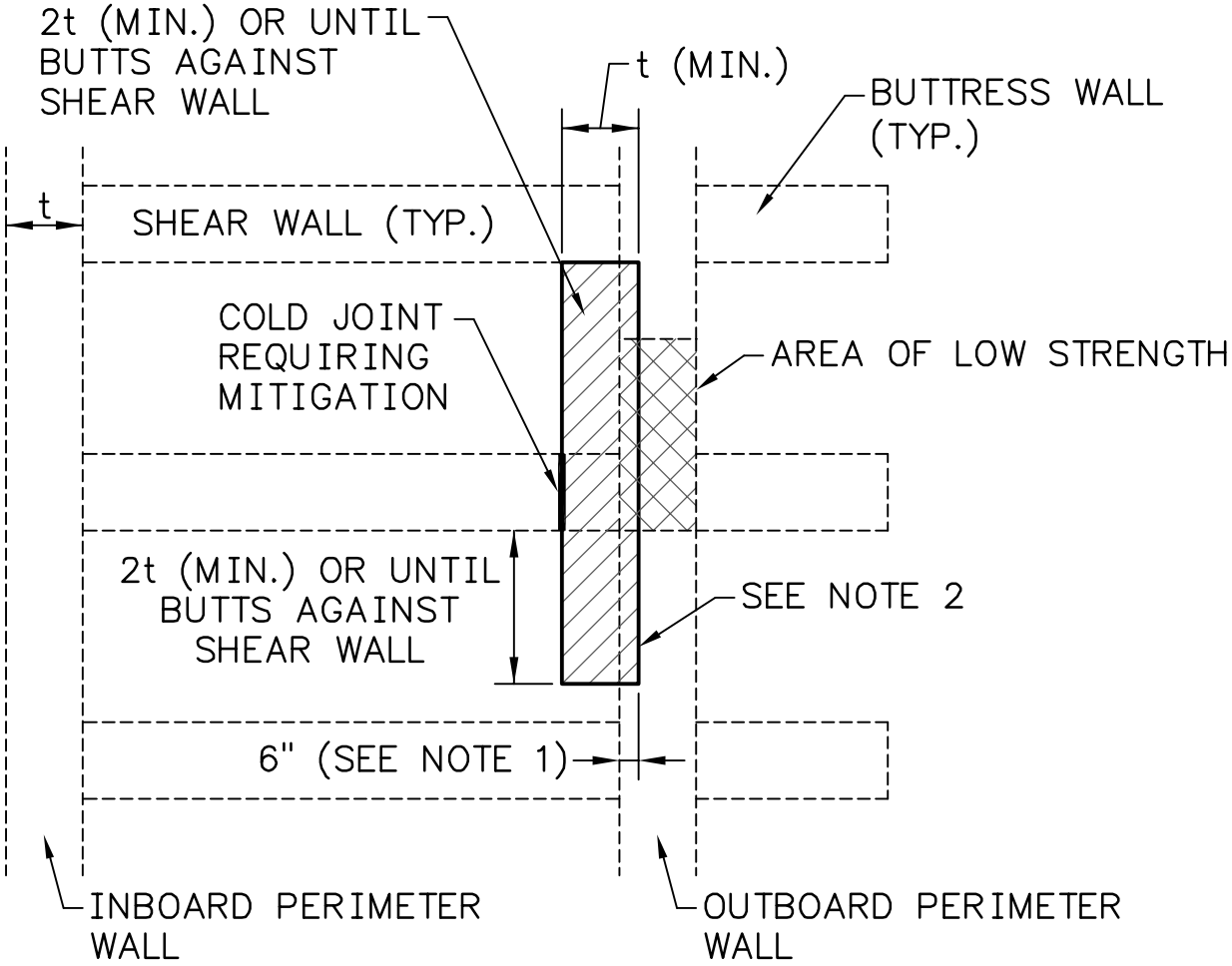

FIGURE 3F – OUTBOARD PERIMETER WALL

NOTES:

1. THE LAYOUT AND EXCAVATOR SET-UP FOR CONSTRUCTION OF THE MITIGATION PANEL SHALL BE ESTABLISHED SO THAT A 6-INCH OVERLAP IS ACHIEVED AT THE START OF THE EXCAVATION.

2. WHERE A PANEL IS USED TO MITIGATE A DEFECTIVE WALL, ROCK EMBEDMENT IS REQUIRED TO THE SAME OR GREATER DEPTH THAT IS REQUIRED FOR THE DEFECTIVE WALL.

PERIMETER WALL STABILIZATION
STRENGTH MITIGATION
BY PANEL CONSTRUCTION

REV 1

PLOT DATE: 04/05/2012 USER: ELLISON, DOC
V:\7756\ACTIVE\175661008\ENVIRONMENTAL\DRAWING\SHEET_FILES\PANEL_MIT\REV_1\FIG_3F_R1.DWG

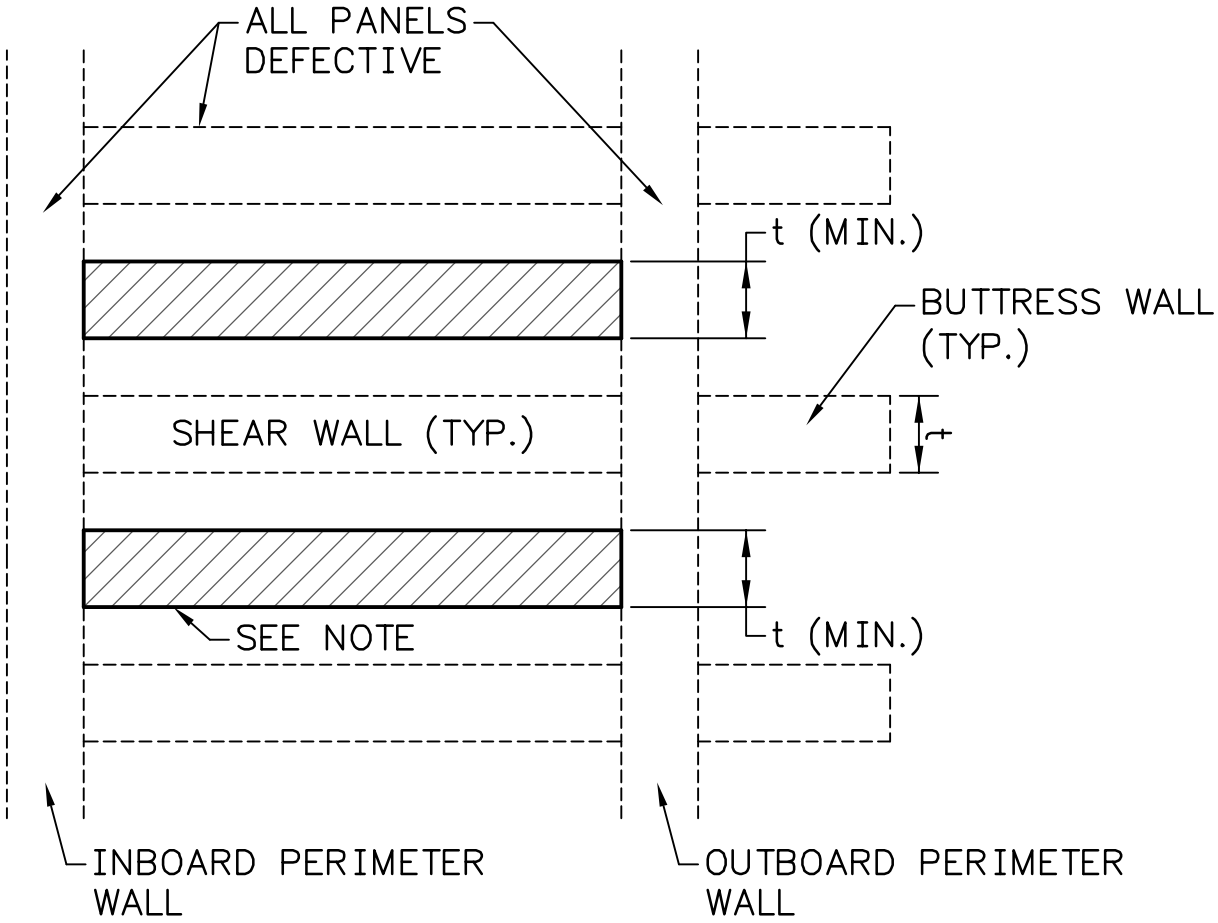

FIGURE 4 – OVERALL LOW STRENGTH

NOTE:
WHERE PANELS ARE USED TO MITIGATE DEFECTIVE WALLS, ROCK EMBEDMENT IS REQUIRED TO THE SAME OR GREATER DEPTH THAT IS REQUIRED FOR THE DEFECTIVE WALLS.

PERIMETER WALL STABILIZATION
STRENGTH MITIGATION
BY ADDITIONAL SHEAR WALL
CONSTRUCTION

REV 0

PLOT DATE: 01/18/2012 USER: CLINKENBEARD, ADAM
V:\7756\ACTIVE\175681008\ENVIRONMENTAL\DRAWING\SHEET_FILES\PANEL_MIT\REV_0\FIG_4_R0.DWG

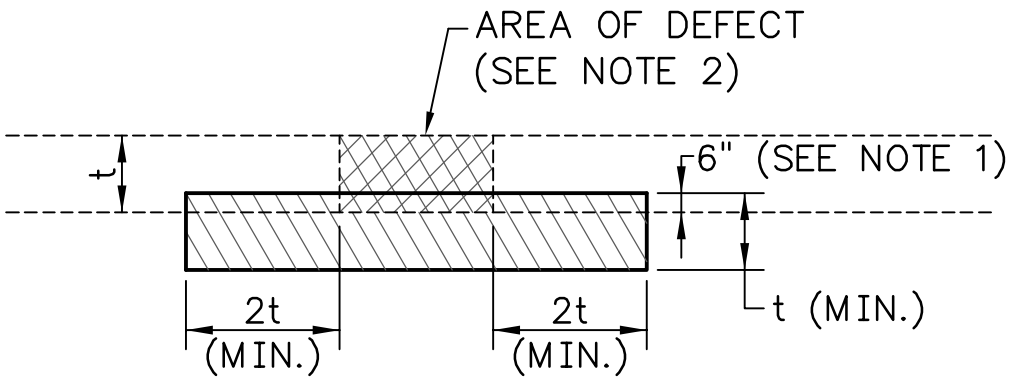

FIGURE 5A – PLAN VIEW

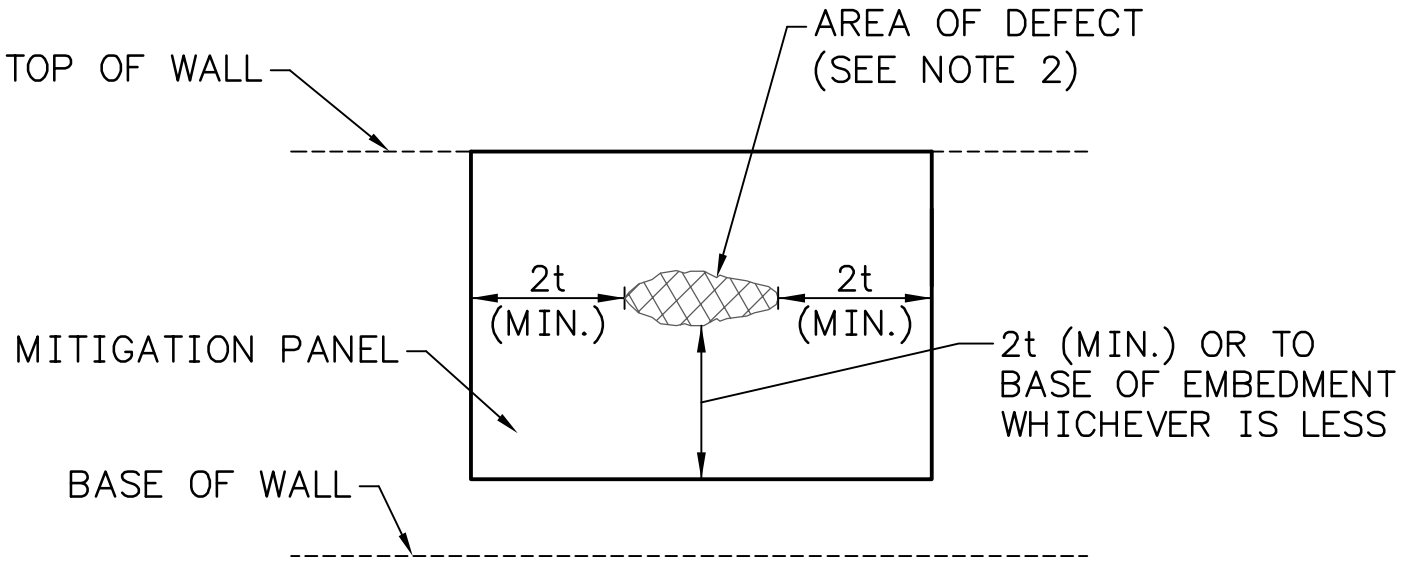

FIGURE 5B – SECTION VIEW

NOTE:

1. THE LAYOUT AND EXCAVATOR SET-UP FOR CONSTRUCTION OF THE MITIGATION PANEL SHALL BE ESTABLISHED SO THAT A 6-INCH OVERLAP IS ACHIEVED AT THE START OF THE EXCAVATION.

2. MITIGATION PANELS ARE REQUIRED ON BOTH SIDES OF A SHEAR WALL IF THE HEIGHT OF THE DEFECTIVE AREA IS GREATER THAN TWO-THIRDS THE HEIGHT OF THE WALL AND THE MITIGATION PANELS ARE LESS THAN THE FULL LENGTH OF THE SHEAR WALL.

REV 1

PERIMETER WALL STABILIZATION
POCKET DEFECT MITIGATION
BY PANEL CONSTRUCTION

PLOT DATE: 04/04/2012 USER: ELLISON, DOC
V:\7756\ACTIVE\175661008\ENVIRONMENTAL\DRAWING\SHEET_FILES\PANEL_MIT\REV_1\FIG_5A_5B_R1.DWG

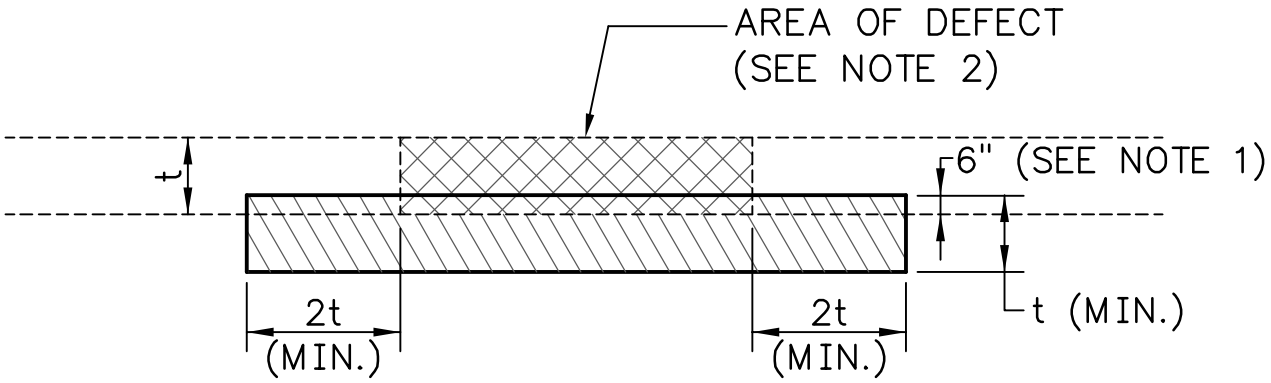

FIGURE 5C – PLAN VIEW

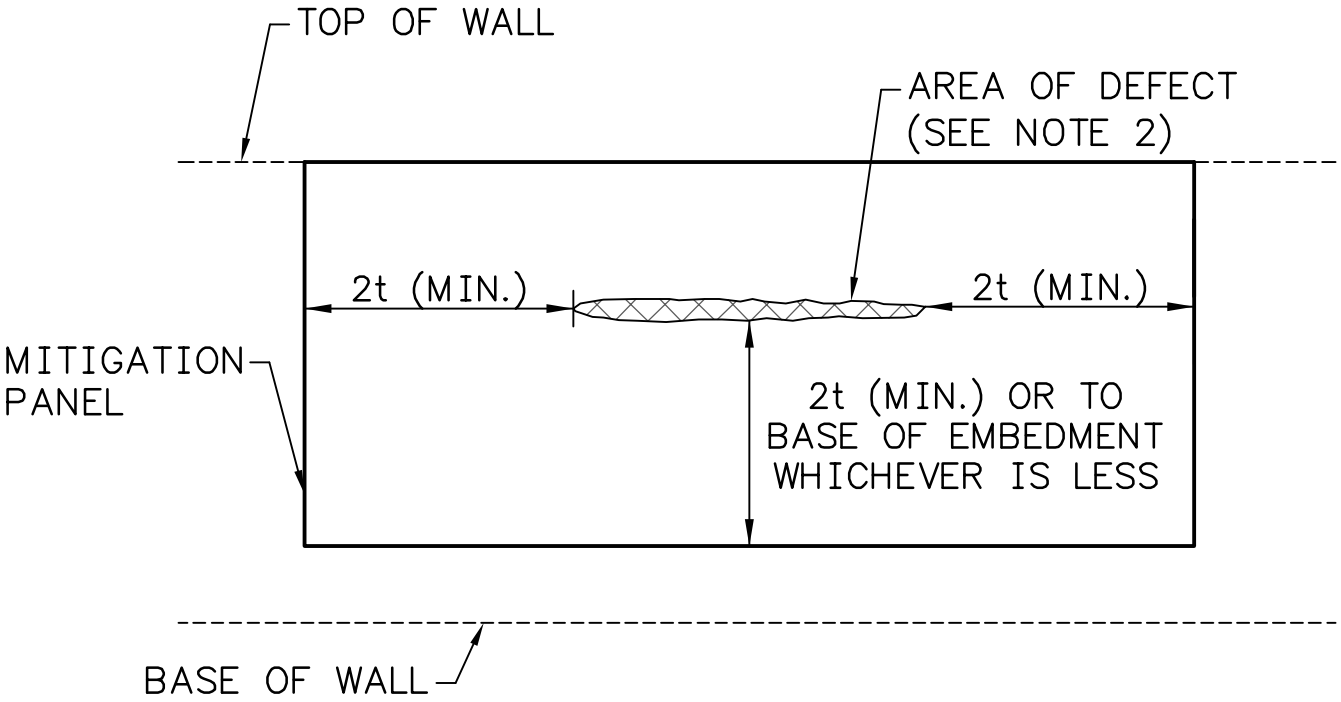

FIGURE 5D – SECTION VIEW

NOTE:

1. THE LAYOUT AND EXCAVATOR SET-UP FOR CONSTRUCTION OF THE MITIGATION PANEL SHALL BE ESTABLISHED SO THAT A 6-INCH OVERLAP IS ACHIEVED AT THE START OF THE EXCAVATION.

2. MITIGATION PANELS ARE REQUIRED ON BOTH SIDES OF A SHEAR WALL IF THE HEIGHT OF THE DEFECTIVE AREA IS GREATER THAN TWO-THIRDS THE HEIGHT OF THE WALL AND THE MITIGATION PANELS ARE LESS THAN THE FULL LENGTH OF THE SHEAR WALL.

REV 1

PERIMETER WALL STABILIZATION
LINEAR DEFECT MITIGATION
BY PANEL CONSTRUCTION

PLOT DATE: 04/04/2012 USER: ELLISON, DOC
V:\7756\ACTIVE\175661008\ENVIRONMENTAL\DRAWING\SHEET_FILES\PANEL_MIT\REV_1\FIG_5C_5D_R1.DWG

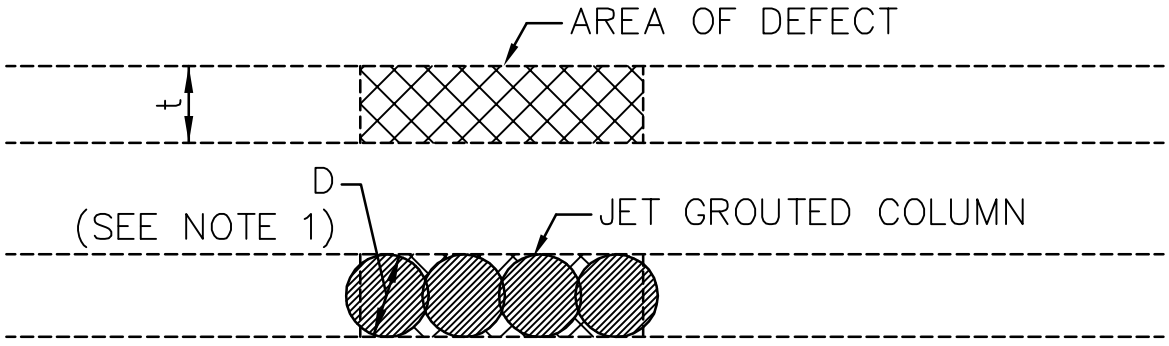

FIGURE 5E – PLAN VIEW

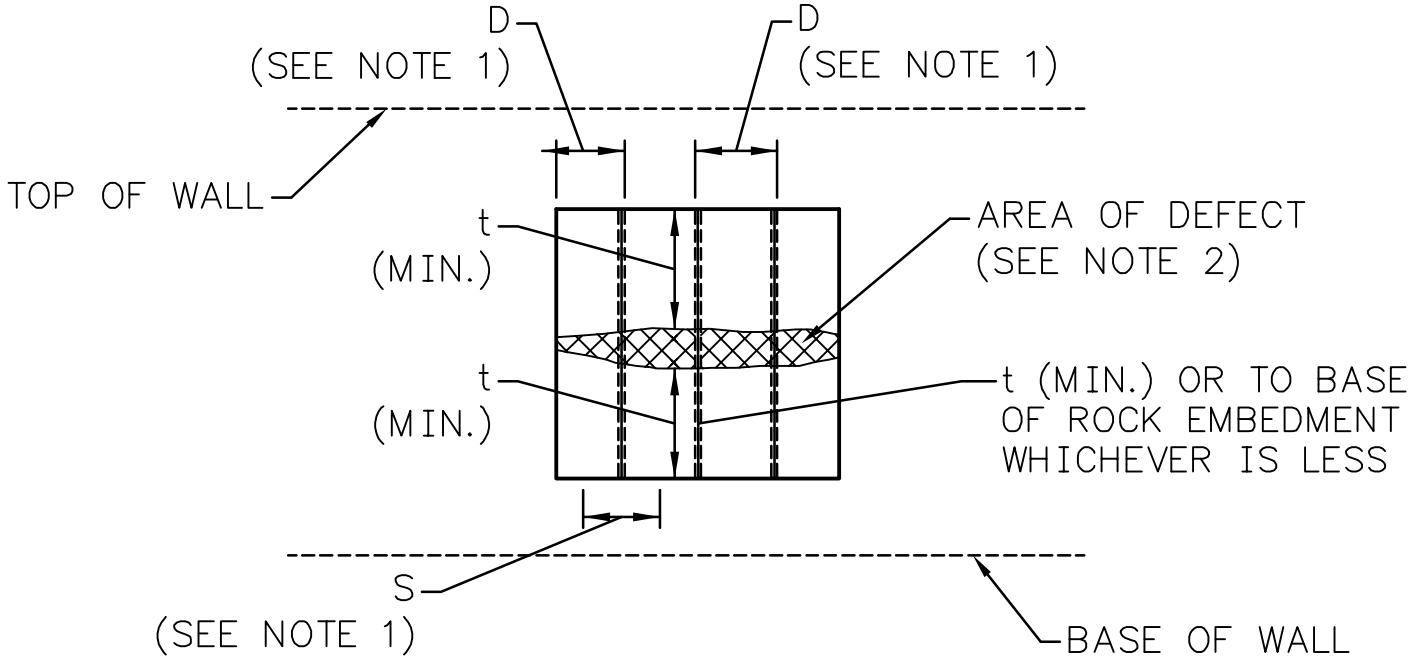

FIGURE 5F – SECTION VIEW

NOTES:

1. JET GROUTED COLUMN DIAMETER (D), SPACING (S), AND STRENGTH SHALL MEET THE REQUIREMENTS LISTED IN SECTION 6.4 OF THE GENERAL MITIGATION PLAN.

2. THE VERTICAL INTERFACE BETWEEN THE JET GROUTED COLUMN AND THE CB WALL WILL BE CLASSIFIED AS A COLD JOINT THAT REQUIRES FURTHER MITIGATION IF THE FIRST OR LAST COLUMN EXCEEDS THREE-FOURTHS THE HEIGHT OF THE WALL.

PERIMETER WALL STABILIZATION
DEFECT MITIGATION BY
JET GROUTED COLUMNS

REV 0

PLOT DATE: 07/02/2012 USER: ELLISON, DOC
V:\1756\ACTIVE\175661008\ENVIRONMENTAL\DRAWING\SHEET_FILES\PANEL_MIT\REV_0\F10_5E_5F_R1.DWG

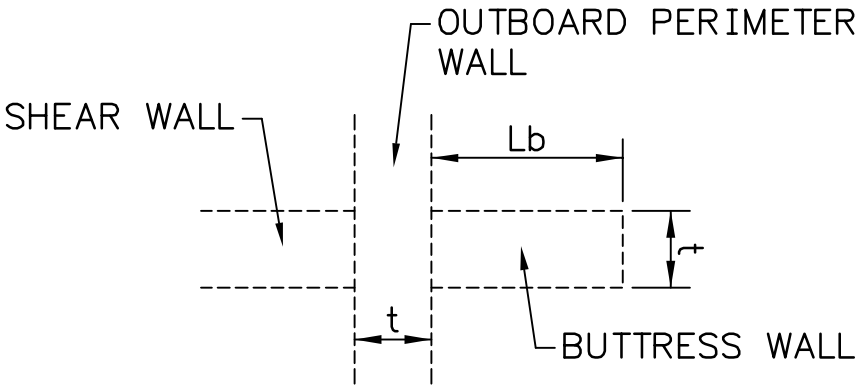

FIGURE 6A – PLAN VIEW

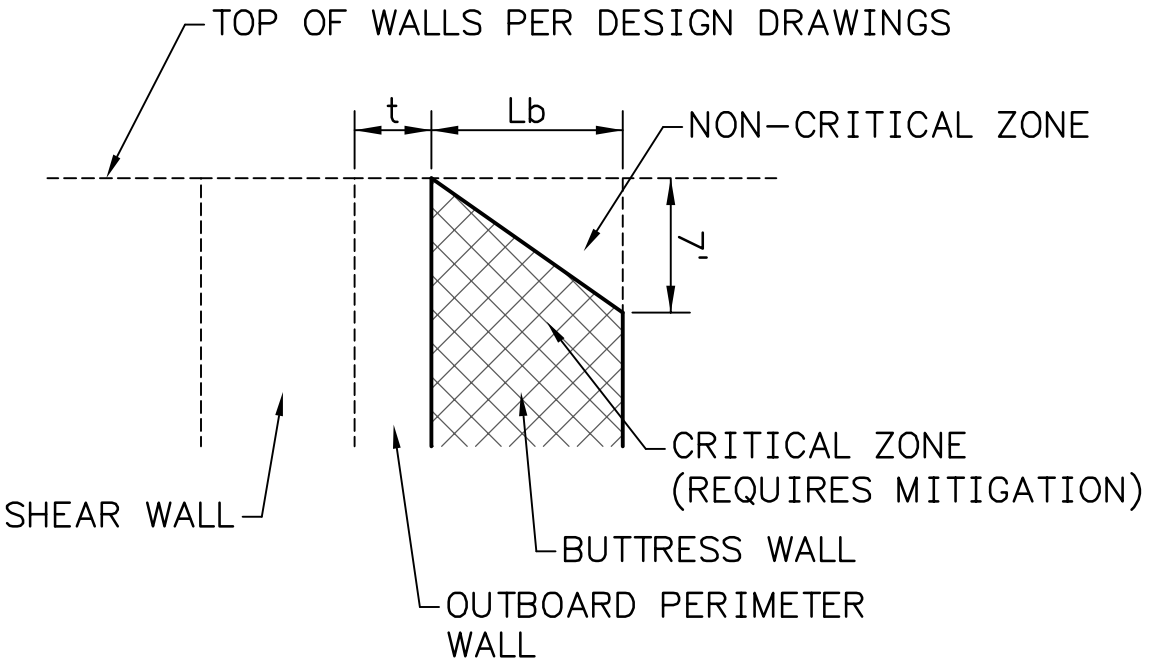

FIGURE 6B – SECTION VIEW

PERIMETER WALL STABILIZATION
DELINEATION OF CRITICAL ZONE IN
BUTTRESS WALL THAT REQUIRES
MITIGATION FOR DAMAGE OR DEFECTS

REV 1

PLOT DATE: 03/23/2012 USER: GRAHAM, DAVE
V:\7756\ACTIVE\175661008\ENVIRONMENTAL\DRAWING\SHEET_FILES\PANEL_MIT\REV_1\FIG_6A_6B_R1.DWG

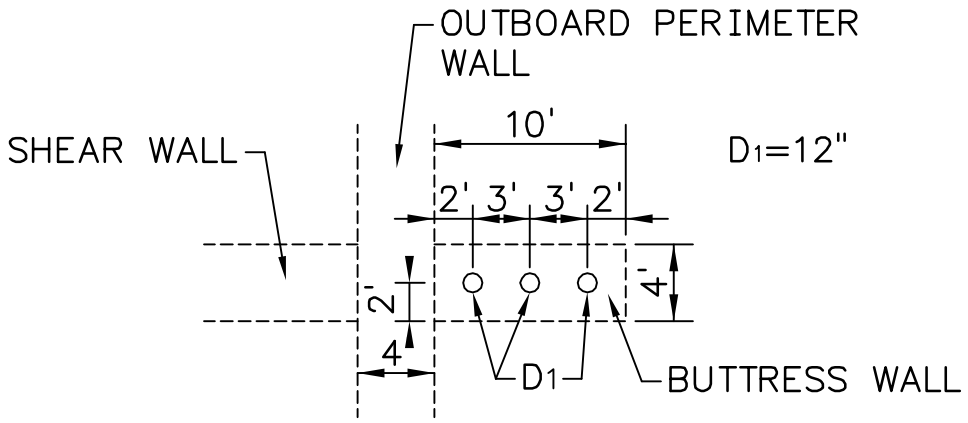

FIGURE 6C – PLAN VIEW OF SHEAR PIN LAYOUT

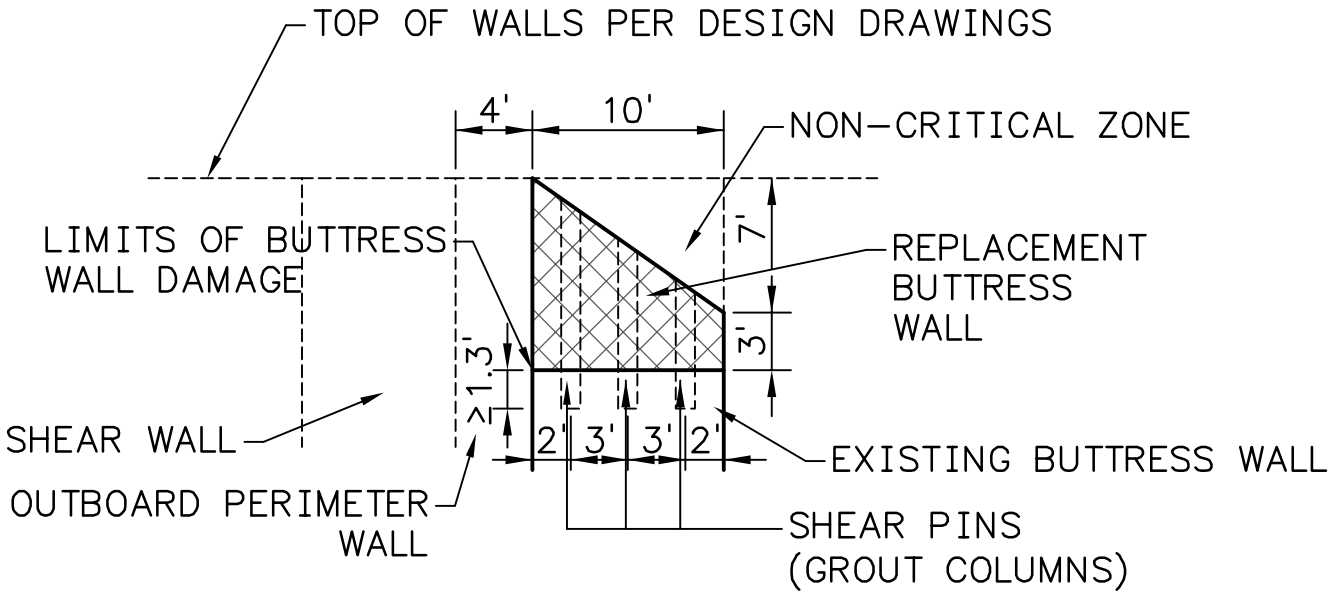

FIGURE 6D – SECTION VIEW OF SHEAR PIN LAYOUT

NOTES:

1. FIGURES 6C AND 6D DEPICT THE REPAIR OF A HYPOTHETICAL BUTTRESS THAT IS DAMAGED TO A DEPTH OF 10 FEET.

2. THE DETAILS FOR THE REQUIRED REPAIR INCLUDING THE NEED FOR SHEAR PINS AND THEIR DIMENSIONS WILL BE DETERMINED ON A CASE BY CASE BASIS FOR EACH SPECIFIC REPAIR.

3. SHEAR PINS WILL BE REQUIRED IF THE JOINT SURFACE IS NOT CLEANED TO REMOVE ALL LOOSE OR FRACTURED MATERIAL.