TABLE OF CONTENTS

10.0	STEAM AND POWER CONVERSION SYSTEM	
10.1	SUMMARY DESCRIPTION	10.1-1
10.2	TURBINE GENERATOR	10.2-1
10.2.1	DESIGN BASIS	10.2-1
10.2.2	DESCRIPTION	10.2-1
10.2.3	TURBINE MISSILES	10.2-2
10.2.3.1	Potential Missile Sources and Missile Characteristics	10.2-3
10.2.3.2	Turbine Missile Protection Criterion	10.2-12
10.2.3.3	Essential Safety-Related Equipment and Structures	10.2-12
10.2.3.4	Turbine Missile Hazard Evaluation	10.2-12
10.2.4	EVALUATION	10.2-15
10.2.5	REFERENCES	10.2-16
10.3	MAIN STEAM SUPPLY SYSTEM	10.3-1
10.3.1	DESIGN BASES	10.3-1
10.3.2	SYSTEM DESIGN DESCRIPTION	10.3-1
10.3.2.1	System Design	10.3-1
10.3.2.2	Material Compatibility, Codes, and Standards	10.3-3
10.3.2.3	NRC Bulletin 88-02 Analysis	10.3-3
10.3.3	DESIGN EVALUATION	10.3-4
10.3.4	TESTS AND INSPECTIONS	10.3-5
10.3.5	WATER CHEMISTRY	10.3-5
10.3.5.1	Purpose	10.3-5
10.3.5.2	Chemistry Specifications	10.3-6
10.3.5.3	Chemistry Control	10.3-6
10.3.5.4	Effect of Water Chemistry on the Radioactive Iodine Partition Coefficient	10.3-7
10.3.6	INSTRUMENT APPLICATION	10.3-7
10.3.7	REFERENCES	10.3-7

TABLE OF CONTENTS

10.4	OTHER FEATURES OF STEAM AND POWER CONVERSION SYSTEM	10.4-1
10.4.1	MAIN CONDENSER	10.4-1
10.4.1.1	Design Bases	10.4-1
10.4.1.2	System Description	10.4-1
10.4.1.3	Safety Evaluation	10.4-2
10.4.1.4	Inspection and Testing	10.4-3
10.4.1.5	Instrumentation	10.4-3
10.4.2	MAIN CONDENSER EVACUATION SYSTEM	10.4-3
10.4.2.1	Design Bases	10.4-3
10.4.2.2	System Description	10.4-3
10.4.2.3	Safety Evaluation	10.4-4
10.4.2.4	Inspection and Testing	10.4-4
10.4.2.5	Instrumentation	10.4-5
10.4.3	TURBINE GLAND SEALING SYSTEM	10.4-5
10.4.3.1	Design Bases	10.4-5
10.4.3.2	System Description	10.4-5
10.4.3.3	Safety Evaluation	10.4-5
10.4.3.4	Inspection and Testing	10.4-6
10.4.3.5	Instrumentation	10.4-6
10.4.4	TURBINE BYPASS SYSTEM	10.4-6
10.4.4.1	Design Bases	10.4-6
10.4.4.2	System Description	10.4-7
10.4.4.3	Safety Evaluation	10.4-7
10.4.4.4	Inspection and Testing	10.4-8
10.4.4.5	Instrumentation	10.4-8
10.4.5	CONDENSER CIRCULATING WATER SYSTEM	10.4-8
10.4.5.1	Design Basis	10.4-8
10.4.5.2	System Description	10.4-8
10.4.5.3	Safety Evaluation	10.4-10
10.4.5.4	Tests and Inspection	10.4-11
10.4.5.5	Instrumentation Application	10.4-11
10.4.6	CONDENSATE POLISHING DEMINERALIZER SYSTEM	10.4-11
10.4.6.1	Design Bases - Power Conversion	10.4-11
10.4.6.2	System Description	10.4-12
10.4.6.3	Safety Evaluation	10.4-14
10.4.6.4	Tests and Inspections	10.4-14
10.4.6.5	Instrumentation	10.4-14
10.4.7	CONDENSATE-FEEDWATER SYSTEM	10.4-15
10.4.7.1	Condensate-Main Feedwater System	10.4-15
10.4.7.2	Auxiliary Feedwater System	10.4-21

TABLE OF CONTENTS

10.4.8	STEAM GENERATOR BLOWDOWN SYSTEM (SGB)	10.4-39
10.4.8.1	Design Bases	10.4-39
10.4.8.2	System Description	10.4-41
10.4.8.3	Safety Evaluation	10.4-42
10.4.8.4	Tests and Inspections	10.4-43
10.4.8.5	Instrumentation Applications	10.4-44
10.4.9	HEATER DRAINS AND VENTS	10.4-44
10.4.9.1	Design Bases	10.4-44
10.4.9.2	System Description	10.4-44
10.4.9.3	Safety Evaluation	10.4-48
10.4.9.4	Inspection and Testing	10.4-49
10.4.9.5	Instrumentation	10.4-49
10.4.10	REFERENCES	10.4-49

LIST OF TABLES

Number	Title
10.1-1	Summary of Important Component Design Parameters
10.2.3-1	Minimum Mechanical Properties for Low-Pressure Turbine Discs
10.2.3-2	Summary of Calculated Results Based on Failure at 186% of Rated Speed
10.2.3-3	Exit Missile Properties for Low-Pressure Discs (and Fragments) - All Low Pressures
10.2.3-4	Low-Pressure Cylinder and Blade Ring Fragment Dimensions
10.2.3-5	Strike Probability Data for Missiles Originating in Low-Pressure Turbine Low-Pressure 2A
10.3.2-1	Main Steam Supply System - Applicable Codes, Standards and Design Conditions
10.3.3-1	Main Steam Supply System Seismic Category I Valves
10.4.1-1	Main Condenser Radioactive Material Activity During Power Operation and Shutdown
10.4.7-1	Criteria for Auxiliary Feedwater System Design Basis Conditions
10.4.7-2	Auxiliary Feedwater Pump Parameters
10.4.7-3	Summary of Sensible Heat Sources
10.4.7-4	Auxiliary Feedwater Flow to Steam Generators Following an Accident/Transient with Selected Single Failure-GAL/MIN
10.4.7-5	Auxiliary Feedwater System Comparison to SRP 10.4.9 and BTP ASB 10-1
10.4.7-6	Responses to Short- and Long-Term Recommendations Resulting from a General NRC Investigation of AFWS
10.4.8-1	Failure Analysis, Steam Generator Blowdown System

LIST OF FIGURES

Number	Title
10.1-1	Flow Diagrams, General BOP Systems
10.1-2	Unit 1 Heat Balance, 100% MW Thermal
10.1-3	Unit 2 Heat Balance, 100% MW Thermal
10.2.3-1	LP Disc Missiles
10.2.3-2	LP Cylinder and Blade Ring Fragments
10.2.3-3	Physical Dimensions of Important Potential Turbine Missiles
10.2.3-4	Relationship of Essential Safety-Related Equipment and Structures to the Turbine Missile Sources
10.3.2-1	Flow Diagram, Main and Reheat Steam
10.4.2-1	Flow Diagram - Condensate
10.4.5-1	Flow Diagram - Condenser Circulating Water
10.4.5-2	Flow Diagram - Condenser Circulating Water
10.4.7-1	Flow Diagram - Condensate
10.4.7-2	Flow Diagram - Feedwater
10.4.7-3	Motor Driven Auxiliary Feedwater Pump Logic
10.4.7-4	Turbine Driven Auxiliary Feedwater Pump Logic
10.4.7-5	Flow Diagram Auxiliary Feedwater
10.4.7-6	Pump Characteristics, Turbine-Driven Auxiliary Feedwater
10.4.7-7	Pump Characteristics, Motor-Driven Auxiliary Feedwater
10.4.8-1	Flow Diagram Steam Generator Blowdown System
10.4.8-2	Radioactivity Concentrations in the Secondary System as a Function of Steam Generator Blowdown Rate
10.4.8-3	Effect of Blowdown Rate on I-131 Release
10.4.9-1	Flow Diagram - High Pressure Heater Drains and Vents
10.4.9-2	Flow Diagram Low Pressure Heater Drains and Vents

10.0 STEAM AND POWER CONVERSION SYSTEM

10.1 SUMMARY DESCRIPTION

The Steam and Power Conversion System is designed to convert the heat produced in the reactor to electrical energy through conversion of a portion of the energy contained in the steam supplied from the steam generators, to condense the turbine exhaust steam into water, and to return the water to the steam generator as heated feedwater.

The major components of the Steam and Power Conversion System are: turbine-generator, main condenser, vacuum pumps, turbine seal system, turbine bypass system, hotwell pumps, condensate booster pumps, main feed pumps, main feed pump turbines (MFPT), feedwater heaters, heater drain pumps, condensate demineralizer system, and condensate storage system. Component arrangement is shown in Figure 10.1-1. The heat rejected in the main condenser is removed by the circulating water system.

The saturated steam produced by the steam generators is expanded through the high pressure turbine and then exhausted to the moisture separator/ reheaters. The moisture separator section removes the moisture from the steam and the two stage reheaters superheat the steam before it enters the low pressure turbines. The steam then expands through the low pressure turbines and exhausts into the main condenser where it is condensed and deaerated and then returned to the cycle as condensate.

The first stage reheater is supplied with steam from the No. 1 extraction point; the condensed steam is cascaded to the No. 2 heater. The second stage reheater is supplied with main steam; the condensed steam cascades to the highest pressure (No. 1) heater.

Condensate is withdrawn from the condenser hotwells by motor-driven hotwell pumps. The pumps discharge into a common header which can carry the condensate through the full flow condensate demineralizers to the demineralized condensate pumps. Normally a percentage (typically 10-30 percent) of the condensate is polished and the remainder of the condensate flow bypasses the condensate demineralizers. These pumps discharge into a common header which carries the condensate through the gland steam condenser (partial flow), the main feed pump condensers, and then through three parallel strings of low-pressure heaters. Each string of low pressure heaters consists of three stages, Nos. 5 through 7, with No. 5 the highest pressure. After passing through the low pressure heaters, the condensate discharges into a common header which carries it to the condensate booster pumps. These pumps discharge to a common header which divides back into three parallel strings of intermediate-pressure heaters, each string consisting of three stages (Nos. 2 through 4) of extraction feedwater heaters. The condensate from the intermediate pressure heater strings is then routed to the main feed pumps. These pumps discharge to a common header which divides and passes through three parallel strings of single-stage high-pressure heaters and returns to a common line before dividing into four streams to the four steam generators. SG blowdown heat exchangers also receive condensate flow for cooling the blowdown.

Heat for the feedwater heating cycle is supplied by the moisture separator reheater drains and by steam from the turbine extraction points. A summary description of the important components and design parameters of the Steam and Power Conversion System is contained in Table 10.1-1. Heat balances for the steam and power conversion cycle are shown in Figures 10.1-2 and 10.1-3.

TABLE 10.1-1 (Sheet 1)

SUMMARY OF IMPORTANT COMPONENT DESIGN PARAMETERS

VERTICAL STEAM GENERATORS

Design data for the steam generators are provided in Table 5.5.2-1.

Operating Conditions at 100 Percent Load

	Unit 1	Unit 2
Steam flow rate	3.78 x 10^6 lb/h	3.78 x 10^6 lb/h
Steam temperature	530.3° F	525.9° F
Steam pressure	887 lb/in^{2}a	855 lb/in^{2}a
Steam quality	99.9 percent	99.75 percent minimum

TURBOGENERATOR

Manufacturer - Westinghouse Electric Corporation
Turbogenerator nameplate rating - 1,183,192 kW

Turbine type -	Horizontal, reaction, tandem-compound, 2-stage reheat, extraction, condensing, 1800-r/min single shaft - 1 high-pressure and 3 low-pressure turbines with 6-flow exhaust and 44 inches last-stage buckets
Generator type and maximum nameplate rating -	One direct connected, hydrogen cooled rotor, water-cooled stator, 1,356,000 kVA, 0.9 power factor, 75 lb/in^{2}g hydrogen, 3 ph, 60 Hz, 24,000 V, 33,625 A, 0.6 scr, Y-connected
Exciter type and capacity -	One shaft-driven, brushless - 5500 kW, 525 V, 1800 r/min

Heat Rate*

Guaranteed performance based on extraction for feedwater heating, including all losses in the unit, also exciter and rheostat losses, rated throttle steam conditions, and 2.0 inches of Hg absolute exhaust pressure with zero makeup:

kW	Btu/kWh
1,183,192	9,871

* This information is provided for historical purposes only. This was the guaranteed tubogenerator performance based on the original plant design conditions.

Moisture Separator and Reheaters

Type -	Moisture removal separator and 2-stage reheater (both high pressure and low pressure are one pass shell and four pass U-tube reheaters).
Manufacturer -	Westinghouse Electric Corporation (moisture removal separator and reheater shell), South Western Engineering Co. (high- and low-pressure tube bundles).
Tube Data -	High pressure - 484 U-tubes, 3/4 inch O.D., .040 inch wall thickness, SA-268 TPXM-8 (439), 27 fins/inch effective surface area of 20,005.9 square ft.

TABLE 10.1-1 (Sheet 2)

SUMMARY OF IMPORTANT COMPONENT DESIGN PARAMETERS

Low pressure - 447 U-tubes, 3/4 outside diameter, .049 inch wall thickness, SA-268 TPXM-8 (439), 27 fins/inch, effective surface area of 18,476.6 square ft.

Size - 46 ft., 1-1/8 inch length
10 ft., 9 inches diameter

Main Feedwater Pump Turbine

Number - (1 Turbine per pump) - 2
Manufacturer - Westinghouse Electric Corporation
Type and speed - EMM-25AN, multistage, dual inlet, 6000 r/min
Throttle pressure - Low-pressure steam, 160 lb/in^{2}a, high-pressure steam, 1060 lb/in^{2}a
Throttle temperature - Low-pressure steam, 494°F, high-pressure steam, 546°F
Back pressure - 5 inches of Hg absolute
Number of stages - 8
Extraction points - None
Rated horsepower - 11,700

Main Feedwater Pumps

Number - 2
Manufacturer - Borg-Warner Corporation, Byron Jackson Pump Division
Type - DVSR, single stage, double suction, double volute, centrifugal
Size - 14 x 14 x 17C
Design point - 20,000 gal/min, 1680-feet head
Service conditions - Pump suitable for continuous service to deliver up to 28,300 gal/min at 399.3°F against a total head of approximately 1405 feet at 6150 r/min, while operating under a minimum net positive suction head of 250 feet

Condensate Booster Pumps

Number - 3
Manufacturer - Borg-Warner Corporation, Byron Jackson Pump Division
Type - DVDSR, single stage, double suction, double volute, centrifugal
Size - 14 x 14 x 15H
Design point - 9000 gal/min, 680-feet head
Motor manufacturer - Hitachi, LTD
Motor design - 1750 hp, 3570 r/min, 6600 V, 3 ph, 60 Hz, horizontal, constant speed

No. 3 Heater Drain Pumps

Number - 3
Manufacturer - Borg-Warner Corporation, Byron Jackson Pump division
Type - DSJH, single stage, double suction, double volute, centrifugal
Size - 8 x 10 x 18H
Design point - 3600 gal/min, 1200-feet head
Motor manufacturer - Hitachi, LTD
Motor design - 1250 hp, 3570 r/min, 6600 V, 3 ph, 60 Hz, horizontal, constant speed

TABLE 10.1-1 (Sheet 3)

SUMMARY OF IMPORTANT COMPONENT DESIGN PARAMETERS

No. 7 Heater Drain Pumps

Number - 2
Manufacturer - Borg-Warner Corporation, Byron Jackson Pump Division
Type - DSJH, single stage, double suction, double volute, centrifugal
Size - 8 x 10 x 15L

Design point: Unit 1 - 2300 gal/min, 830 feet
Unit 2 - 2000 gal/min, 730 feet
Motor manufacturer - Hitachi, LTD
Motor design: Unit 1 - 700 hp, 3545 r/min, 6600 V, 3 ph, 60 Hz, horizontal, constant speed
Unit 2 - 450 hp, 3545 r/min, 6600 V, 3 ph, 60 Hz, horizontal, constant speed

Demineralized Condensate Pumps

Number - 3
Manufacturer - Ingersoll-Rand Company
Type of pump - AA, single stage, end suction, centrifugal
Size - 10 x 18
Design point - 6700 gal/min, 150-feet head
Motor manufacturer - Westinghouse Electric Corporation
Motor design - 350 hp, 1770 r/min, 460 V, 3 ph, 60 Hz, horizontal, constant speed

Condensate Hotwell Pumps

Number - 3
Manufacturer - Borg-Warner Corporation, Byron Jackson Pump Division
Type of pump - VMT, four stages, single suction, vertical process
Size - 28KXH
Design point - 6700 gal/min, 600-feet head
Motor manufacturer - Hitachi, LTD
Motor design - 1250 hp, 1180 r/min, 6600 V, 3 ph, 60 Hz, vertical, constant speed

Condenser

Number - 1
Manufacturer - Ingersoll-Rand Company
Type - Horizontal, triple shell, single pass, surface, deaerating
Total surface area, 757,952 ft^2
Tube data - 77,592 tubes, 49 feet, 9 inches effective length, 3/4 inch outside diameter, No. 24 BWG, B338 Gr2 Titanium (No. 22 BWG tubes used in impingement zone)
Tube sheets - Base material: Carbon steel; cladding material: Titanium
Waterboxes - Divided, two inlets (72 inches diameter) and two outlets (72 inches diameter) bottom connections per shell

SQN

TABLE 10.1-1 (Sheet 4)

SUMMARY OF IMPORTANT COMPONENT DESIGN PARAMETERS

Hotwell data - Deaerating type, storage capacity of hotwells at normal operating level, 32,992 gal
Circulating water quantity, gal/min - 530,600
Cleanliness, percent - 95
Duty, 10^9 Btu/hr - 7.829

Design pressures: Shell, lb/in^{2}g - 20
Hotwell, lb/in^{2}g - 20
Waterboxes, lb/in^{2}g - 25

Air Removal Equipment

Number - 3
Manufacturer - Nash Engineering Company
Size - AT-2004E
Type - Mechanical, 2-stage liquid ring pump
Design point - Suction pressure inch of Hg absolute - 1.0, rated capacity each - 15 SCFM
Motor manufacturer - General Electric Company
Motor design - 115 hp, 500 r/min, 460 V, 3 ph, 60 Hz, horizontal, constant speed

FEEDWATER HEATERS

Number - 21 (seven stages divided into three streams)
Type - Closed, horizontal, U-tube
Nos. 1 and 2 Heater Tubes: 304SS (Heater Manufacturer: YUBA)
Nos. 3 and 4 Heater Tubes: 304SS (Heater Manufacturer: Foster Wheeler)
Nos. 5, 6, and 7 Heater Tubes: SA-688-304 SS (Heater Manufacturer: Southwestern Engineering Company)

CONDENSATE CLEANUP SYSTEM

Number - Twelve service vessels (two batteries of service vessels; one battery per plant generating unit; six service vessels per battery). One regeneration subsystem (common to two plant generating units).
Manufacturer - L & A Water Treatment Division, Chromalloy American Corporation
Type - Deep bed (externally regenerated mixed-bed ion exchange process)
Size - 9 feet, 6 inches diameter condensate demineralizer service vessels
Design conditions - Capacity per unit battery - 17,000 gal/min (at full condensate flow)
Capacity per service vessel - 3400 gal/min (five service vessels in service, one standby)
Pressure - 300 lb/in^{2}g
Temperature - 140° F

TABLE 10.1-1 (Sheet 5)

SUMMARY OF IMPORTANT COMPONENT DESIGN PARAMETERS

SAFETY VALVES

Number - 5 per steam generator
Minimum Required Rated Capacity, - 3,917,000 lb/hr for each set of five safety valves (based on original maximum calculated turbine steam flow)

Set Pressure - See Section 3/4.7.1.1 of the Technical Specification for the steam generator safety valve setpoints.

Atmospheric Relief Valves

Number - 1 per steam generator
Minimum capacity, (Flood Mode) - 60,000 lb. hr @ 90 psig inlet pressure
Minimum capacity, (RHR cut-in) - 101,000 lb. hr @ 110 psig inlet pressure
Maximum capacity - 890,000 lb. hr @ 1085 psig inlet pressure
Outlet pressure - 0 psig

Turbine Bypass Valves

Number of valves - 12
Flow per valve, lb/h - 522,000
Main steam pressure at valve inlet (for above flow), lb/in^{2}g - 782
Maximum flow per valve at 1085 lb/in^{2}g inlet pressure, lb/h - 890,000
Time to open (full stroke), seconds - 3
Full stroke modulation, seconds - 20
Failure position - Closed

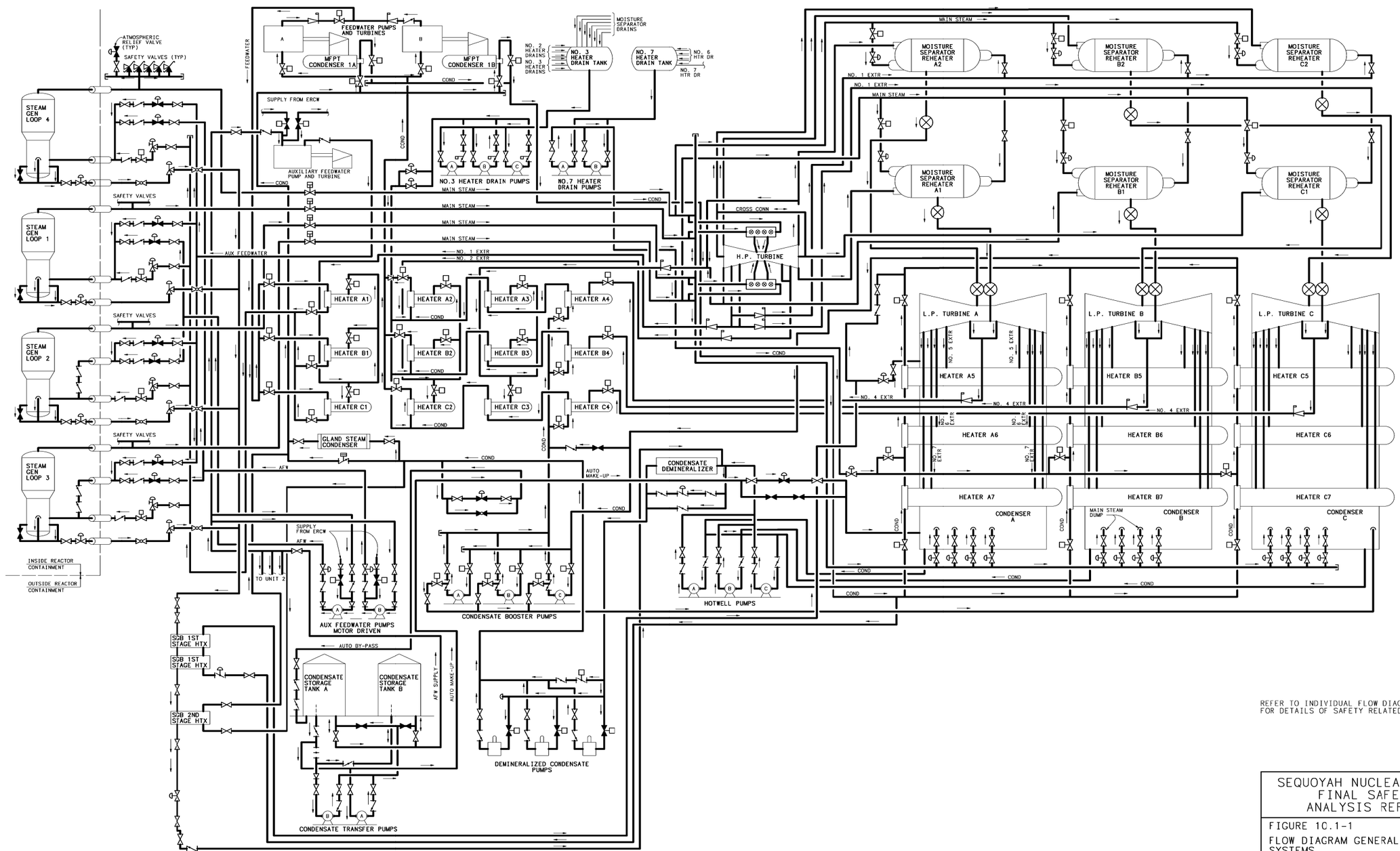

REFER TO INDIVIDUAL FLOW DIAGRAMS FOR DETAILS OF SAFETY RELATED SYSTEMS.

SEQUOYAH NUCLEAR PLANT
FINAL SAFETY ANALYSIS REPORT

FIGURE 1C.1-1

FLOW DIAGRAM GENERAL BOP SYSTEMS
(REVISED BY AMMENDMENT 13)

DRAWING SERVICES UNIT
PROCAD MAINTAINED DRAWING
THIS CONFIGURATION CONTROL DRAWING IS MAINTAINED BY THE SQN CAD UNIT AND IS PART OF THE TVA PROCADAM DATABASE.
COMPUTER GRAPHICS

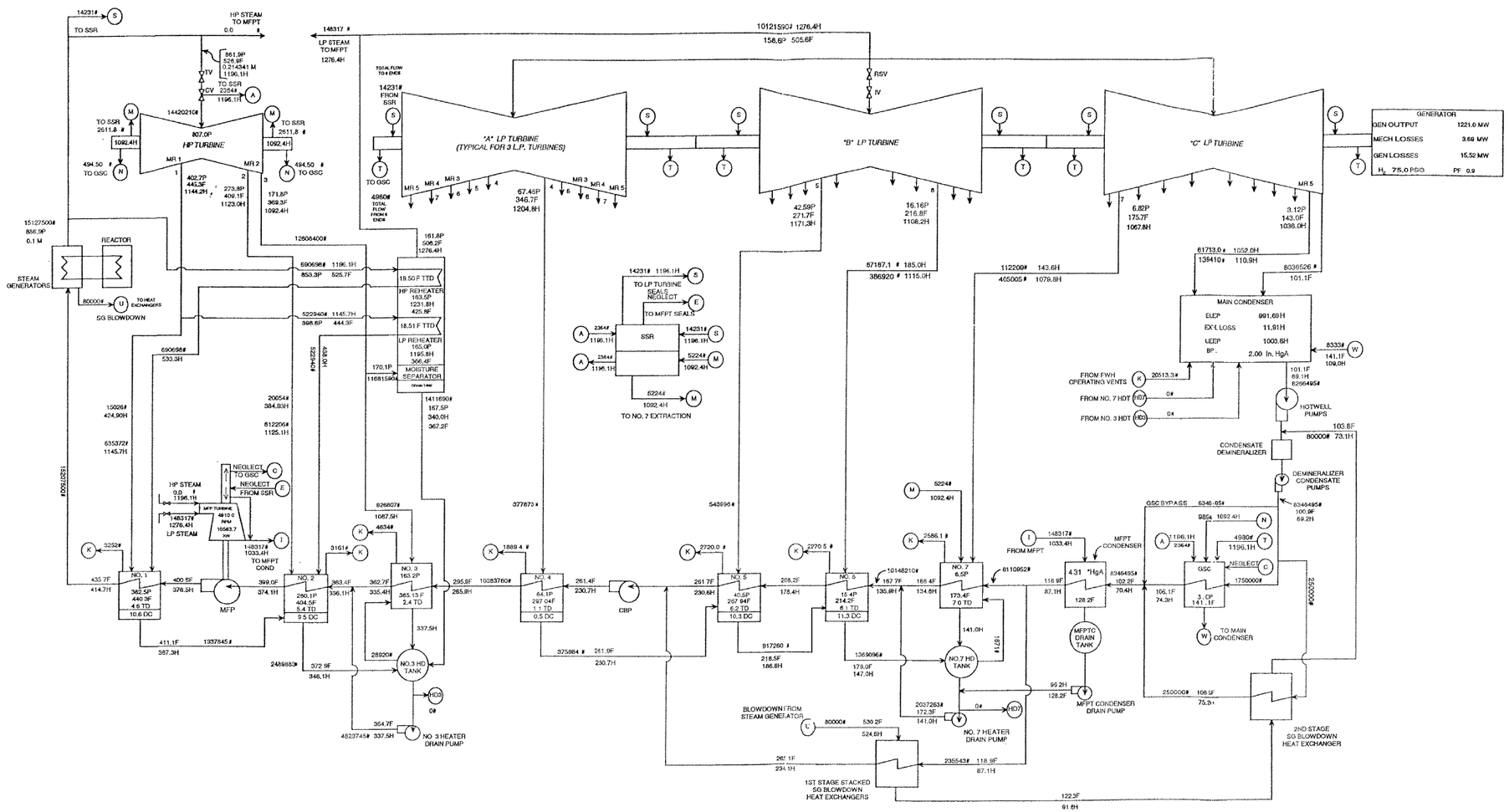

SEQUOYAH NUCLEAR PLANT
FINAL SAFETY
ANALYSIS REPORT

FIGURE 10.1-2
UNIT 1 HEAT BALANCE
100% MW THERMAL

(REVISED BY AMENDMENT 18)

CAD MAINTAINED DRAWING

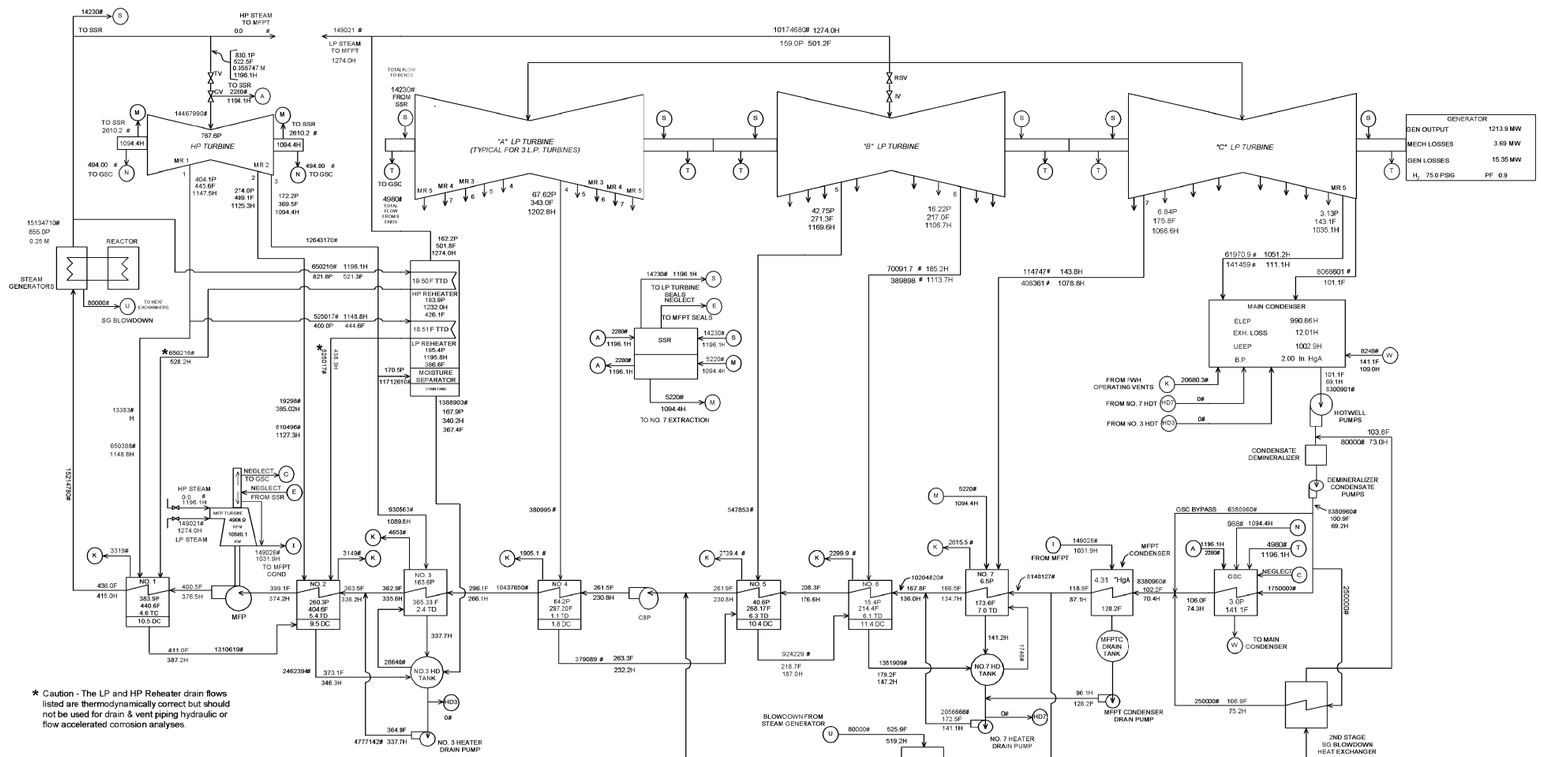

SEQUOYAH NUCLEAR PLANT
FINAL SAFETY
ANALYSIS REPORT

FIGURE 10.1-3
UNIT 2 HEAT BALANCE
100% MW THERMAL

(REVISED BY AMENDMENT 19)

CAD MAINTAINED DRAWING

10.2 TURBINE GENERATOR

10.2.1 Design Basis

The purpose of the turbine generator is to use steam supplied by the PWR System in the conversion of thermal energy to electrical energy, and to provide extraction steam for feedwater heating. The turbine generator together with its associated systems and their control characteristics are integrated with the features of the reactor and its associated systems to obtain an efficient and safe energy conversion and power generation unit.

The turbine receives steam from the four steam generators and converts the thermal energy to electric energy. The Unit 1 heat balance indicates that the generator produces 1,221,000 kW when the turbine passes 14,420,210 lb/h of steam at throttle conditions of 861.9 lb/in^{2}a, 0.21 percent moisture, and at back pressure of 2.0 inches of Hg absolute (Figure 10.1-2). The Unit 2 heat balance indicates the generator produces 1,213,867 kW when the turbine passes 14,468,080 lb/h of steam at throttle conditions of 830 lb/in^{2}a, 0.35 percent moisture, and at a back pressure of 2.0 inches of Hg absolute (Figure 10.1-3). Under emergency conditions the Turbine Protection System provides the necessary protection for the turbine-generator equipment.

It is intended that the units will be utilized primarily as base loaded units.

The functional limitation on the turbine imposed by the Nuclear Steam Supply System (NSSS) is that the NSSS accepts step load changes of ± 10 percent and ramp load changes of ± 5 percent per minute over the range of 15 percent to 100 percent. Manual control is required below 15 percent load.

10.2.2 Description

The turbine generator unit consists of the following components: turbine, generator, exciter, controls, and required support subsystems. (The turbine is a tandem compound double-stage reheat unit with 44-inch last-stage blades.) It consists of double-flow high-pressure turbine and three double-flow low-pressure turbines with extraction nozzles arranged for seven stages of feedwater heating. Exhaust steam from the high-pressure unit passes through six moisture separator/reheaters before entering the low-pressure turbines. The moisture separator/reheaters are shell and tube-type heat exchangers containing a section of chevron vanes for moisture separation. The chevron-type vanes alter the steam velocity to reduce the moisture content of the steam through centrifugal separation of the moisture particles.

Heating steam enters the high- and low-pressure reheater U-tube bundles to provide two stages of reheat for the steam flowing from the chevron section.

The generator is a direct-connected, hydrogen-cooled, 3 phase, 60 Hz, 24,000 V, 1800 rev/min synchronous generator. The generator has a nameplate rating of 1,356,200 KVA at 0.9 power factor (PF) with 75 psig hydrogen pressure. The generator has a short circuit ratio of 0.60, designed with conductor cooling of the armature winding, and conductor coolant is demineralized water. The excitation system is rated at

5,500 kW and 525 V, and uses shaft-mounted solid-state electronic control devices for the establishment of generator field current. The devices are mounted internally in the exciter shaft so as to eliminate the necessity for sliprings.

The turbine utilizes a Westinghouse designed Electrohydraulic Control (EHC) System for control of both speed and load. The EHC System, composed of solid-state electronic devices coupled through suitable electrohydraulic transducers to a high-pressure hydraulic fluid system, provides control of the main stop, governing, intercept, and reheat stop valves of the turbine. Emergency speed protection is provided by an electrical overspeed governor, backed up by mechanical and electrical overspeed trip mechanisms.

The reactor controls enable the nuclear steam supply system to follow plant (turbogenerator) load changes automatically, including the acceptance of step load increases or decreases of 10 percent and ramp increases or decreases of 5 percent per minute within the load range of 15 percent of 100 percent without reactor trip or steam dump. The difference between the highest measured average reactor coolant loop temperature and the programmed reference temperature (based on turbine impulse chamber pressure) which is processed through a lead-lag compensation unit, constitutes the primary control signal for the reactor control system. An additional control input signal to the reactor is derived from the reactor power versus turbine load mismatch signal. These signals provide input to the rod control system to control the reactor coolant temperature by regulation of the control rod bank position.

The turbine generator is also protected by the Turbine Protection System which will automatically trip the turbine on evidence of low condenser vacuum, abnormal thrust bearing wear, or low bearing oil pressure. The turbine can be tripped manually if subjected to excessive shaft vibration. The turbine trip system is also equipped with solenoid-operated trip devices, which provide means to initiate direct tripping of the turbine upon receipt of appropriate electrical signals. The turbine will also be tripped manually on detection of high temperature or pressure differences between condenser shells, high back pressure on the main condenser, high journal or thrust bearing metal temperature, high bearing oil discharge temperatures, and high differential expansion. When a turbine trip is initiated, the extraction system nonreturn valves are tripped close either by means of a pilot dump valve connected to the turbine trip system, on electrical trip signal generated by the turbine trip, or by both of these means. Turbine governor functions and turbine control are discussed under Control Systems Not Required for Safety, Section 7.7. For overpressure protection of the turbine exhaust hoods and the condenser, four rupture diaphragms which rupture at approximately 5 lb/in^2g are provided on each turbine exhaust hood. Additional protective devices include exhaust hood high temperature alarm.

Any influence of the turbine controls on the RC System is controlled by the RC System. Analyses of the most severe of these influences are given in Chapter 15.

10.2.3 Turbine Missiles

An evaluation of the turbine missile threat to essential safety-related equipment and structures at the Sequoyah Nuclear Plant is provided. The potential turbine missile sources and turbine missile characteristics are identified. Following this is a statement defining the turbine missile protection criterion adopted for Sequoyah. Essential safety-related equipment and structures of the plant are identified. An evaluation of the turbine missile hazard to these essential safety-related equipment and structures is then provided.

10.2.3.1 Potential Missile Sources and Missile Characteristics

The missile containing ability of Westinghouse steam turbines was evaluated by Westinghouse by performing various tests and analyses.

Some of these tests involved spinning alloy steel discs to failure within various carbon steel housings. The discs were notched to ensure failure in a given number of segments at the desired speed. Test results were correlated with various parameters descriptive of the missile momentum and energy and the geometry of the missile and housing.

The housings were of varying geometry but mainly were axisymmetric and concentric with the rotation axis of the disc. They ranged in complexity from a circular cylinder to containments which approximated actual turbine construction.

From these tests, logical criteria were evolved for predicting the missile containing ability of various turbine structures. In addition, the tests also served to determine the mode of failure which certain structural shapes common to turbine construction undergo when impacted by a missile. This is important since the mode of failure has a great influence on the amount of energy absorbed by the housing.

In 1979, a Westinghouse test program was initiated to develop guidelines for evaluating nonsymmetric impacts. Earlier tests had concentrated primarily on symmetric impacts whereas most disc collisions with the typical cylinder structure were of a nonsymmetrical type. Also in 1979, stress corrosion cracking was found in the keyway areas of several discs on low-pressure rotors being refurbished by Westinghouse. Consequently, in 1980 and 1981, Westinghouse reevaluated their turbine missile energies and probability analyses and developed a revised methodology to include the above failure mechanisms, the effects of an ultrasonic low-pressure turbine disc inspection and other miscellaneous changes resulting from the reevaluation. The results of Westinghouse's latest analyses are included in this section. These latest analyses were considered in conjunction with the original FSAR hazard analyses and the missile energies are such that no appreciable change in the strike probabilities will occur. Consequently, the original FSAR hazard analyses are still valid. References 3 and 4 present the methods used by Westinghouse to address their revised analysis for turbine missiles in 1981. This reflects upgrade to address stress corrosion cracking of rotor discs.

Criteria Considered in Selecting Number of Disc Segments

Disc fractures into 90°, 120°, and 180° segments were considered. Calculations show that the 90° fragments pose the greatest threat as external missiles.

A 120° segment has an initial translational kinetic energy greater than that of a 90° segment; however, it also has a greater rim periphery resulting in greater energy loss while penetrating the turbine casing.

This results in nearly equal kinetic energy of 90° and 120° segments leaving the turbine casing. However, since the 90° segments have the smaller impact areas they represent a more critical missile.

The initial translational kinetic energy of a half disc is equal to that of a quarter disc. Because of kinematic considerations, a half disc segment will always impact with the rotor after fracture. The 180° segment, due to its larger size, will subject the stationary parts to greater deformation. As a result the 180° segment will leave the turbine casing with lower energy than the 90° segment.

For the purpose of evaluating the missile containing ability of the turbine structure against the 90° segments, the shrunk on discs have been postulated to fail in four quarters.

Energy Considerations

Before failure, a disc has a total energy which is purely rotational of 1/2 (Iw^2), where I is the mass moment of inertia of the disc about its axis of rotation and w is the angular velocity of the turbine at the postulated failure speed. After failure the mass center of each fragment translates at a velocity of w_r, r being the distance from the rotation axis of the disc to the mass center of the fragment. In addition the fragment rotates about its center of mass with an angular velocity of w. The initial rotational energy of the disc is partitioned into both the translational and rotational kinetic energy of the fragments.

Test results and analytical considerations indicate that the translational kinetic energy of a fragment is of much greater importance than the rotational kinetic energy in predicting the ability of the fragment to penetrate the turbine casing. Rotational kinetic energy tends to be dissipated as a result of blade crashing and friction forces developed between the fragment surface and stationary parts.

These principles apply to fragments which would be generated by failure of either the high-pressure turbine rotor or the low pressure turbine discs.

High-Pressure Turbine

High-Pressure Turbine Construction and Design

The high-pressure turbine element is of a double-flow design, thus it is inherently thrust balanced. Steam from the four control valves enters at the center of the turbine element through four inlet pipes, two in the base and two in the cover. These pipes feed four double-flow nozzle chambers flexibly connected to the turbine casing. The steam leaving the nozzle chambers passes through inlet flow guide rings and flows through the reaction blading. The reaction blading is mounted in the blade rings which in turn are mounted in the turbine casing.

The high-pressure turbine rotor is made of NiCrMoV alloy steel. The specified minimum mechanical properties are as follows:

Tensile Strength, lb/in^2, min.	100,000
Yield Strength, lb/in^2, min. (0.2% offset)	80,000
Elongation in 2 inches, percent, min.	18
Reduction of Area, percent, min.	55
Impact Strength, Charpy V-Notch, ft-lb (min. at room temperature)	60
50% Fracture Appearance Transition Temperature °F, max.	0

Material Properties

Due to the very large margin between the high pressure, spindle-bursting speed and the maximum speed at which the steam can drive the unit with all the admission valves fully open and because the probability of failure due to fatigue or stress corrosion cracking is so small it is insignificant, the probability of spindle failure is practically zero. Therefore, no missile will be developed during turbine runaway.

The main body of the rotor (bladed) weighs approximately 132,500 lb. The approximate values of the transverse centerline diameter, the maximum diameter, and the main body length are 36, 67.3, and 138.5 inches, respectively.

The blade rings are made of stainless steel castings and the casing cover and base is made of carbon steel castings. The specified minimum mechanical properties are as follows:

Tensile Strength, lb/in^2, min.	100,000
Yield Strength, lb/in^2, min. (0.2 percent, min. for Unit 1)	80,000
Elongation in 2 inches, percent, min.	15
Reduction of Area, percent min.	40

The bend test specimen is required to be capable of being bent cold through an angle of 90° and around a pin 1 inch in diameter without cracking on the outside of the bent portion.

The approximate weights of the four blade rings, the casing cover, and the casing base are 65,000, 115,000, and 115,000 lbs, respectively.

The casing cover and base are tied together by means of more than 100 studs. The stud material is an alloy steel having the following mechanical properties:

	2-1/2 Inches and less	Over 2-1/2 to 4 inches	3.625 inches	Over 4 to 7 inches
Bolt Length, in		28 to 59	72.5	
Tensile Strength, lb/in^2, min.	125,000	115,000	135,000	110,000
Yield Strength, lb/in^2, min. (0.2% offset)	105,000	95,000	110,000	85,000
Elongation in 2 inches, percent, min.	16	16	14	16
Reduction of Area, percent, min.	50	50	32	45
Cross-sectional Area, in^2 (total for outer cylinder, approximate)		620	660	
Free-length Volume, in^3 (total for outer cylinder, approximate)		31,500	34,000	

The studs have lengths ranging from 28 to 59 inches and diameters ranging from 2.50 inches to 3.5 inches. The total stud cross-sectional area is approximately 620 in^2 and the total stud free-length volume is approximately 31,500 in^3.

Effects on High-Pressure Element of Turbine-Generator Unit Over-Speeding

The maximum speed at which the unit may run is 190 percent of rated speed. (Note that this is slightly more than the burst speed of 186 percent of rated speed used in the analysis.) At this

speed the highest stressed low-pressure turbine disc will fracture. Upon failure these low-pressure disc fragments will damage the turbine to the extent that additional overspeed will not be possible.

The minimum bursting speed of the high-pressure rotor, based minimum specified mechanical properties of the rotor material, is 270 percent of rated speed. The actual bursting speed is closer to 300 percent of rated speed.

Hence, the actual margin between the bursting speed and the maximum running speed is of the order of 110 percent of nominal. No failure of the high-pressure rotor is anticipated as a consequence of a unit runaway; and therefore, no missiles are expected to be generated.

Furthermore, Reference 6 reports that in addition to no expected missiles due to turbine overspeed, no high-pressure rotor missiles are expected to be generated for High Cycle or Low Cycle Fatigue. The purpose of this paper is to discuss technical reasons that nuclear HP rotors of integral construction do not need to be considered when assessing missile generation probability of nuclear turbines. This supports Guideline b (used to represent conditions at the Sequoyah Nuclear Plant) in Section 10.2.3.4, which states “the only source for missiles will be low-pressure turbines.”

Low-Pressure Turbine

Low-Pressure Turbine Construction and Design

The double-flow low-pressure turbine incorporates high efficiency blading, diffuser type exhaust and liberal exhaust hood design. The low-pressure turbine cylinder is fabricated from steel plate to provide uniform wall thickness thus reducing thermal distortion to a minimum. The entire outer casing is subjected to low temperature exhaust steam.

The temperature drop of the steam from its inlet to its exhaust from the last rotating blades is taken across three walls: an inner cylinder No. 1, a thermal shield, and an inner cylinder No. 2. This precludes a large temperature drop across any one wall, except the thermal shield which is not a structural element, thereby virtually eliminating thermal distortion. The fabricated inner cylinder No. 2, is supported by the outer casing at the horizontal centerline and is fixed transversely at the top and bottom and axially at the centerline of the steam inlets, thus allowing freedom of expansion independent of the outer casing. Inner cylinder No. 1 is, in turn, supported by inner cylinder No. 2, at the horizontal centerline and fixed transversely at the top and bottom and axially at the centerline of the steam inlets, thus allowing freedom of expansion independent of inner cylinder No. 2. Inner cylinder No. 1 is surrounded by the thermal shield. The steam leaving the last row of blades flows into the diffuser where the velocity energy is converted to pressure energy.

Material Properties

The outer cylinder and the two inner cylinders are fabricated mainly of ASTM 515-GR65 material. The minimum specified properties are as follows:

Tensile Strength, lb/in^2, min.	65,000
Yield Strength, lb/in^2, min.	35,000
Elongation in 8 inches, percent min.	19
Elongation in 2 inches, percent min.	23

The low-pressure rotors are made of NiCrMoV alloy steel. The specified minimum mechanical properties are as follows:

Tensile Strength, lb/in^2, min.	115,000
Yield Strength, lb/in^2, min. (0.2% offset)	100,000

Elongation in 2 inches, percent, min.	16
Reduction of Area, percent, min.	40
Impact Strength, Charpy V-Notch, ft-lb (min. at room temperature)	40
50% Fracture Appearance Transition Temperature, °F, max.	80

The shrunk-on discs are made of NiCrMoV alloy steel. There are ten discs shrunk on the shaft with five in each steam flow path. These discs experience different degrees of stress when in operation. Disc No. 2, starting from the transverse centerline, experiences the highest stress, while disc No. 5 experiences the lowest. The minimum specified mechanical properties for the discs are shown in Table 10.2.3-1. The actual specified mechanical properties for the discs, which are proprietary, were submitted to the NRC for Sequoyah Unit 1 by L. M. Mills' letter dated August 1, 1980 to A. Schwencer.

Effects on Low-Pressure Element of Turbine-Generator Unit Overspeeding

The bursting speed of each of the shrunk-on discs is calculated under the assumption that the disc will fail when the average tangential stress equals the maximum temperature corrected tensile strength of the disc material. (No disc cracks are assumed. The effects of stress corrosion cracking on the low-pressure elements are discussed later in this section.) Disc No. 2 is the most highly stressed disc with a calculated failure speed of 190 percent of rated speed. Upon failure of disc No. 2 (or any other disc), further acceleration of the unit is assumed to halt because of extensive internal damage to the turbine.

For the purpose of analysis, all discs were assumed to fail at 186 percent of rated speed which corresponds to the destructive overspeed provided by Westinghouse in their original analysis. As previously stated, using the original destructive overspeed has not invalidated the hazard analysis.

Calculated initial translational velocity and initial translational kinetic energies of disc quadrants leaving the turbine rotor based on disc fractures at 190 percent rated speed are as follows:

Disc No.	Weight (lb)	Velocity c.g. (ft/s)	Kinetic Energy (10^6ft-lb)
1	2700	1096	50.4
2	2965	1143	60.2
3	2775	1071	49.4
4	3210	1072	57.3
5	3710	927	49.5

Summary of Individual Disc Results at Destructive Overspeed (190 Percent of Rated Speed) - Based on Westinghouse's Reanalysis

Disc No. 1

Disc No. 1 is assumed to fail at 190 percent of rated speed. At this speed the kinetic energy of a disc quadrant is 50.4 x 10^6 ft-lb. The initial collision of the quadrant of disc No. 1 is with the

concentric blade ring. Secondary collisions with inner cylinder No. 1, inner cylinder No. 2, and the outer cylinder also occur. As a result, four external missiles are generated by the failure of disc No. 1. One missile, the disc quadrant, has an energy of 0.52 x 10^6 ft-lb. The other missiles, blade ring and cylinder fragments, have energies of 0.66 x 10^6 ft-lb, 0.43 x 10^6 ft-lb, and 0.37 x 10^6 ft-lb respectively.

Disc No. 2

Disc No. 2 is calculated to fail at 190 percent of rated speed. The initial kinetic energy of a quadrant of disc No. 2 is 60.2 x 10^6 ft-lb.

An initial collision occurs between the disc No. 2 quadrants and the concentric blade ring. Secondary collisions also occur between the disc and blade ring fragments and inner cylinders No. 1, No. 2, and the outer cylinder. As a result, three external missiles are generated. The largest missile, the disc fragment, has an energy of 8.82 x 10^6 ft-lb. The other missiles (blade ring and cylinder fragments), have energies of 8.61 x 10^6 ft-lb, and 0.47 x 10^6 ft-lb, respectively.

Disc No. 3

Disc No. 3 is assumed to fail at 190 percent of rated speed. A quadrant of disc No. 3 has an initial kinetic energy of 49.4 x 10^6 ft-lb. The center plane of disc No. 3 is located axially between two concentric blade rings. The result is that fragments of disc No. 3 do not enter into a square collision with either blade ring. Consequently, as tests indicate, there is a high probability that the disc fragments in following the path of least resistance, will merely wedge between the rings pushing them aside with relatively little loss in translational kinetic energy. There will be subsequent collisions with and perforations of inner cylinder No. 2, and the outer cylinder. The calculated ejection energy for a quadrant of disc No. 3, is 15.35 x 10^6 ft-lb. Two other external missile fragments are also generated with energies of 5.92 x 10^6 ft-lb and 6.08 x 10^6 ft-lb, respectively.

Disc No. 4

Disc No. 4 is assumed to fail at 190 percent of rated speed. The initial kinetic energy of a quadrant of disc No. 4 is 57.3 x 10^6 ft-lb. The initial collision occurs between fragments of disc No. 4 and the surrounding blade rings and supporting structure. Inner cylinder No. 2 is perforated, and subsequent collision with and perforation of the outer cylinder occurs. As a result, quadrants of disc No. 4 are ejected with a kinetic energy of 30.17 x 10^6 ft-lb. Two other external missile fragments are also generated with energies of 4.51 x 10^6 ft-lb and 5.70 x 10^6 ft-lb, respectively.

Disc No. 5

Disc No. 5 is assumed to fail at 190 percent of rated speed (blades are lost prior to reaching 190 percent of rated speed). A quadrant of disc No. 5 has a kinetic energy of 49.5 x 10^6 ft-lb. The initial collision occurs between the disc fragments and the diffuser ring and adjacent blade ring. As a result, disc No. 5 is ejected through the end section of the outer cylinder with a translational kinetic energy of 32.59 x 10^6 ft-lb. Two other external missile fragments are also generated with energies of 2.99 x 10^6 ft-lb and 2.54 x 10^6 ft-lb respectively.

Table 10.2.3-2 tabulates the exit missile properties for all discs at 186 percent of rated speed which was the failure speed originally calculated by Westinghouse. These data were used in the original hazards analysis. Table 10.2.3-3 tabulates the exit missile properties as calculated by Westinghouse during their reanalysis for all discs at 100 percent and 120 percent of rated speed, in addition to summarizing the information provided above for 190 percent of rated speed (destructive overspeed). The disc failures at 100 percent and 120 percent of rated speed would be similar to those described for the 190 percent speed except for considerably lower missile energies and different representative postulated fragments as indicated in Table 10.2.3-3. As previously noted, the slight increase in destructive overspeed does not invalidate the original hazards analysis.

Effects on Low-Pressure Element Due to Stress Corrosion Cracking

Prior to 1980, the Westinghouse missile probabilities and energies analyses were directed primarily at missile generation due to destructive overspeed. Fatigue of the rotating elements due to speed cycling was also considered as a missile generation mechanism in these earlier analyses. These earlier Westinghouse analyses indicated that the probabilities of missile generation due to fatigue and destructive overspeed were very low in comparison to the probability estimated by Bush. The Bush probability (1×100^{-4} missile producing disintegrations per turbine operating year) was chosen for the original Sequoyah missile hazard evaluation in order to provide a very liberal margin of safety.

When stress corrosion cracks were discovered in some of the Westinghouse low-pressure turbine rotor discs keyways and bores in late 1979 and early 1980, new Westinghouse analyses which were concerned primarily with the probabilities of low-pressure disc failure and missile generation due to stress corrosion cracking (SCC) were developed to reflect this newly discovered and relevant missile producing mechanism. The results of the missile energies portion of the new Westinghouse analyses are shown in Tables 10.2.3-3 and 10.2.3-4, and Figures 10.2.3-1 and 10.2.3-2. These new Westinghouse analyses also reevaluated the missile generation probabilities for fatigue of the rotating low-pressure turbine rotor discs. These new fatigue missile generation probabilities are six to seven orders of magnitude lower than the maximum allowable turbine missile generation probability and thus are insignificant. The probabilities of disc failure and missile generation due to destructive overspeed are not affected by these new analyses, and thus remain the same as stated in the earlier Westinghouse analyses. (Several orders of magnitude lower than the maximum allowable turbine missile generation probability.) The probability of missile generation due to SCC at design overspeed conditions (120 percent of rated speed) is two orders of magnitude lower than the probability of missile generation due to SCC at rated speed. Consequently, the probability of missile generation at Sequoyah (due to all failure mechanisms) is, for analysis purposes, approximately equal to the probability of missile generation due to SCC at rated speed. Thus, the following discussion will be mostly concerned with the probability of missile generation due to SCC at rated speed.

The probability of a missile generation from stress corrosion of a low-pressure turbine rotor disc is a function of the disc inspection interval, the disc critical crack size, the disc maximum crack growth rate, the maximum crack sizes present initially (if any), and the ability of the turbine's cylinders and casings to contain the ruptured disc and associated fragments. Initially, the disc characteristics and properties such as the location and size of any cracks, the material toughness, the tangential bore stress, the normal operating temperature of the disc, the disc

yield strength, and other similar parameters are known. With this given information and that in Table 10.2.3-3, and the methodologies used in the latest Westinghouse analyses, critical crack sizes, the maximum growth rates, and a matrix of missile generation probabilities verses inspection intervals (based on turbine operating time) can be calculated for each disc. Westinghouse methodologies used in their latest reanalyses are documented in Topical Report WSTG-1-NP "Procedures for Estimating the Probability of Steam Turbine Disc Rupture from Stress Corrosion Cracking", May 1981, and Topical Report WSTG-2-NP "Missile Energy Analysis Methods for Nuclear Steam Turbines," May 1981. As an alternate to the above probabilistic approach for turbine missile analysis and the effects of SCC, the NRC has developed a deterministic approach which utilizes fracture mechanics, material properties, turbine operating history, etc., to determine critical crack sizes, maximum crack growth rates, and other suitable information which are used to establish low pressure nuclear turbine rotor disc inspection intervals. This deterministic approach for low pressure turbine disc inspection intervals will be used for Sequoyah. Note that both of the above approaches will provide approximately the same level of protection (or risk) with regard to turbine disc missile generation.

Prior to exceeding 5 percent power on Sequoyah Unit 1, a preservice (baseline) ultrasonic (and visual) inspection of the low-pressure turbine discs (and rotors) was performed at the request of the NRC to verify that there were not any significant cracks in these components. No significant cracks were found. The test results for this inspection were reviewed and accepted by the NRC. No preservice inspection was required or necessary for Sequoyah Unit 2.

Also at the request of the NRC, an ultrasonic (and visual) inspection of the low-pressure turbine discs (and rotors) were performed prior to startup following the second refueling outage on Sequoyah Unit 1. The results of these inspections and new inspection intervals, were provided to the NRC for their review.

Missile Impact Areas and Dimensions

Figure 10.2.3-3 shows the overall width and projected impact areas of a disc quadrant. The following dimensions and areas for each of the five disc quadrants were used in the hazards analysis:

Disc No.	1	2	3	4	5
A_1, ft^2	4.9	4.2	2.0	2.4	3.0
A_2, ft^2	2.31	2.04	1.74	1.96	2.45
A_3, ft^2	3.7	3.4	3.3	3.6	4.1
W, ft	6.1	6.0	6.0	5.8	5.2
L, ft	2.6	2.7	2.8	2.7	2.3

A_1: Disc rim projected impact area

A_2: Disc end projected impact area

A_3: Disc hub projected impact area

W: Maximum dimension of disc quadrant
L: Radial dimension of disc quadrant

Figure 10.2.3-1 shows the overall width and projected impact areas of a disc quadrant from the latest Westinghouse analysis. The dimensions and areas for each of the five disc quadrants are as follows:

Disc No.	1	2	3	4	5
A_1, ft^2	4.94	4.28	2.03	2.45	3.10
A_2, ft^2	2.40	2.23	1.77	2.03	2.60
A_3, ft^2	3.33	3.09	3.09	3.33	4.00
A_4, ft^2	1.27	1.26	1.28	1.46	1.89
W, ft	6.08	6.08	6.08	5.88	5.32
L, ft	2.64	2.72	2.80	2.74	2.43

A_1: Disc rim projected impact area

A_2: Disc end projected impact area

A_3: Disc hub projected impact area

A_4: Disc end impact area

W: Maximum dimension of disc quadrant
L: Radial dimension of disc quadrant

Table 10.2.3-4 and Figure 10.2.3-2 show the overall dimensions and shapes of the blade ring and cylinder fragments. (This information was also provided with Westinghouse's latest analysis).

Ejection Angles of Disc Quadrants (and Missile Fragments)

Based on test results, we calculate the ejection angles for disc quadrants leaving the turbine casing are calculated to be as follows:

1. Disc Nos. 1, 2, 3, and 4; ± 5° measured from the vertical radial plane passing through the disc.

2. Disc No. 5; 5° to 25° measured from the vertical radial plane passing through the disc. The disc quadrant will eject only towards the adjacent coupling on the rotor shaft. However, for conservatism in the analysis, the end disc was assumed to be ejected with an equal probability from 0° to 25° measured from the vertical radial plane.

10.2.3.2 Turbine Missile Protection Criterion

The turbine missile protection criterion adopted for the Sequoyah Nuclear Plant is based upon the recommendations given in Reference 1 and NRC inspection criteria for low pressure turbine rotor discs. The interpretation made for Sequoyah is that the possibility of unacceptable damage to safety-related equipment and structures should not be significant. A significant threat is considered to be one having a probability of unacceptable damage to safety-related equipment and structures greater than 1×10^{-7} per turbine per year or 2×10^{-7} per 2-unit plant per year. (These probabilities should not change appreciably when the new NRC inspection criteria discussed in the "Effects on Low-Pressure Element Due to Stress Corrosion Cracking" portion of FSAR section 10.2.3.1 is utilized). Equipment and structures considered essential for the preservation of safety are those needed to bring the reactor to and keep it in a cold shutdown state and/or those needed to keep the site boundary accident dosages at/or below limits specified in 10 CFR 100.

10.2.3.3 Essential Safety-Related Equipment and Structures

Six equipment installations and structures were considered essential for the preservation of safety following a missile producing turbine disintegration. Included in this listing are:

a. Unit 1 reactor containment
b. Unit 2 reactor containment
c. Main control room
d. Spent fuel pit
e. Diesel generator building
f. Intake structure

The location of these items within the plant and their relationship to the potential turbine missile sources are shown in Figure 10.2.3-4.

10.2.3.4 Turbine Missile Hazard Evaluation

The expression used to evaluate the turbine missile hazard contains four probability components and a factor accounting for the scope of the source of missiles. This is written as:

$$Pr(E) = nPr(A)Pr(B)Pr(C)Pr(D)$$

Where: n = The number of turbine generator units at the plant. At the Sequoyah Nuclear Plant n = 2.

Pr(A) = The probability of event A occurring per turbine operating year. Event A is defined as a missile producing turbine disintegration (penetration of outer turbine casings).

Pr(B) = The probability of event B occurring per turbine disintegration (missile generation). Event B is the production of a particular type of missile. In these analyses, two types of missiles are considered center-disc missiles (disc Nos. 1, 2, 3, and 4) and end disc missiles (disc No. 5).

Pr(C) = The probability of event C occurring per turbine disintegration (missile generation) producing the particular type of missiles considered in event B. Event C is defined as a turbine missile strike upon any safety-related equipment or structure.

Pr(D)	=	The probability of event D occurring per turbine missile strike upon safety-related equipment or structure. Event D is defined as the impairment or destruction of the equipment or structure.
Pr(E)	=	The probability of event E occurring per turbine operating year. Event E is defined as the infliction of unacceptable damage from a turbine missile.

Several guidelines were employed to make this expression represent conditions at the Sequoyah Nuclear Plant. A listing of these includes:

a. The probability of missile generation (missile penetrates and leaves the outer turbine casing), Pr(A), will be 1×10^{-4}/yr. Such a probability rate, as stated in Reference 1, is a very conservative upper bound limit based on current experience of 70,000 turbine years under actual operating conditions.

b. The only source for missiles will be the low-pressure turbines. In this instance, there are three low-pressure turbines in each of the two turbine generator units. Consequently, there are just six different locations from which missiles could originate. The center of low-pressure turbine was assumed to be the point of origin for missiles.

c. Only one turbine disc from one low-pressure turbine will disintegrate in a turbine accident producing missiles.

d. In the event of a missile producing turbine disintegration, the probability of a center disc rupture is assumed to be 1.0 (thus Pr(B) = 1.0) and the probability of an end disc rupture is assumed to be 0.5 (therefore , Pr(B) = 0.5 in this instance). Such values were assumed to assure conservatism.

e. Quarter-disc missiles from each missile producing turbine disintegration event were assumed.

f. The turbine missile masses and turbine casing exit velocities assumed are those specified in Table 10.2.3-2 for 186 percent of rated speed. These may be compared with the masses and energies for 190 percent presented in Table 10.2.3-3 which were produced by the Westinghouse reanalysis and are due to different failure assumptions (see Effects on Low-Pressure Element of Turbine-Generator Unit Overspeeding). Note that the energies vary greatly among the two cases. However, since disc No. 2 is calculated to fail first during a destructive overspeed event, this disc is used to represent the properties of all center discs. With this consideration, it may be seen that the values assumed in the analysis (Table 10.2.3-2) are considerably higher than those recently reported by Westinghouse.

g. Center-disc missiles were assumed to be deflected ± 5° during the turbine casing penetration process.

h. End disc missiles were assumed to be deflected from 0° to 25° during the turbine casing penetration process. This is conservative with respect to the new Westinghouse analysis which calculated deflections in the 5° to 25° range. In addition, the energy assumed in the

analysis is lower than that reported in the Westinghouse analysis for end discs (see disc No. 5 in Tables 10.2.3-2 and 10.2.3-3). However this difference is offset by the deflection angle range and the significantly larger center disc missile energies used in the analysis. There are four center discs for each end disc.

i. All strikes upon equipment installations or structures essential for the preservation of safety were assumed to eliminate that particular safety function. Under such an interpretation, Pr(D) = 1.0. This is true for rated and overspeed conditions. For conditions at less than rated speed Pr(D) = 0.5.

Strike probabilities upon essential safety-related equipment and structures were calculated by the conservative methodology described in Reference 2. Both three- and two-dimensional analyses were conducted.

The three-dimensional analysis of the strike probability is an investigation to determine the probability that a missile will emerge from a turbine casing with a velocity vector directed toward the essential safety-related items. Three of the six safety-related items listed in Paragraph 10.2.3.3 were considered to be vulnerable to this kind of impact.

These were the main control room and the two reactor containment structures. The results obtained indicated that no missiles can emerge from any of the low-pressure turbines at sufficiently low trajectory elevation angles to strike these structures. Such findings indicate that there is no hazard to these three essential structures from missiles on their upward portion of their trajectory.

The two-dimensional analysis of the strike probability is an investigation to determine the probability of a turbine missile striking any of the essential safety-related items identified in Paragraph 10.2.3.3 during the downward part of the trajectory. In the analyses conducted, both center-disc and end-disc missiles were considered. The results indicated that missiles from low-pressure turbine, low-pressure 2A, constituted the greatest threat. A strike probability for center- disc missiles from low-pressure 2A was found to be 4.5×10^{-4} per turbine disintegration and a strike probability for end-disc missiles from this turbine was found to be 9.3×10^{-4} per turbine disintegration. Additional details on these strike probabilities are shown in Table 10.2.3-5.

A summary of the factors appearing in the unacceptable damage probability equation for the two kinds of missiles that could originate at turbine low-pressure 2A are as follows:

<u>Center-Disc Missiles</u>

n = 2 turbine generator sets/plant

Pr(A) = 1×10^{-4} missile producing disintegrations/turbine year
Pr(B) = 1.0 center-disc missiles/missile producing disintegration
Pr(C) = 4.5×10^{-4} strikes on safety-related items/center-disc missile
Pr(D) = 1.0 unacceptable disablements/missile strike

<u>End-Disc Missile</u>

n = 2 turbine generator sets/plant

Pr(A) = 1 x 10^{-4} missile producing disintegrations/turbine year
Pr(B) = 0.5 end disc missiles/missile producing disintegration
Pr(C) = 9.3 x 10^{-4} strikes on safety-related items/end disc missile
Pr(D) = 1.0 unacceptable disablements/missile strike

The product of the related factors show that the probability of unacceptable damage to essential safety-related equipment or structures is 9.0 x 10^{-8}/turbine year for center-disc missiles and 9.3 x 10^{-8}/turbine year for end-disc missiles. In each instance, these conservatively determined probabilities are below the acceptable risk threshold of 1 x 10^{-7}/turbine/year per unit specified in Reference 1. It is, therefore, concluded that the hazard from turbine missiles at the Sequoyah Nuclear Plant is not significant. It should be noted that a hazards probability reanalysis was not performed upon submittal of the Westinghouse SCC work, the changes in missile energies are such that no appreciable change in the strike probabilities will occur. Further, there is considerable conservatism in the assumptions used in the analysis, which are listed above.

10.2.4 Evaluation

The following operational transients can occur, caused by operation of turbine, generator, or distribution system protection equipment.

a. Turbine trip due to turbine abnormalities.
b. Turbine trip due to generator abnormalities.
c. Transients due to rapid load changes or system abnormalities.

The analysis of the consequences of the severest of these events with respect to reactor safety are discussed in Chapter 15, Accident Analysis.

There can be any number of component or system operational abnormalities that can be postulated to produce a turbogenerator load transient. However, since the effects of such abnormalities can be no worse than a turbine or generator trip, these occurrences are not formally listed.

Any noble gas activity in the secondary system as well as the particulate activity present due to moisture carryover from the steam generators enters the high-pressure turbine. The subsequent activity entering the low-pressure turbine is reduced due to the moisture separation that occurs between the exit of the high-pressure turbine and the entrance to the low-pressure turbines. Activity levels in the turbine are expected to be low and the shielding is provided by the piping, turbine casing, and other components. If any additional shielding is required in local areas, it will be provided so that unlimited access to the turbine area is possible. Details of the shielding design are discussed in Section 12.1.

Radiation protection measures for the Steam and Power Conversion System are based on a maximum total primary-to-secondary leakage of 1 gal/min and 1 percent failed fuel. On that basis, all components of the system are considered access areas with maximum dose rates to an individual of less than 1 mr/hr. Because of (1) the very low probability of operation with a large primary-to-secondary leakage rate, (2) the low equipment contact doses, and (3) the absence of

equipment with which could accumulate significant amounts of radioactive material, TVA does not consider the steam and power conversion system or the turbine building to be a significant source of operator exposure.

10.2.5 References

1. Bush, S. H., "Probability of Damage to Nuclear Components Due to Turbine Failure," CONF-730304, Topical Meeting on Water-Reactor Safety, Salt Lake City, Utah, March 26-28, 1973, pp 84-104.

2. Semanderes, S. N., "Topical Report, Methods of Determining the Probability of a Turbine Missile Hitting a Particular Plant Region," WCAP-7861, February 1972.

3. Topical Report: Procedures for Estimating the Probability of Steam Turbine Disc Rupture from Stress Corrosion Cracking, submitted to the NRC May, 1981, by Westinghouse Steam Turbine Generator Division WSTG-1-NP.

4. Topical Report: Missile Energy Analysis Methods for Nuclear Steam Turbines, submitted to the NRC May, 1981, by Westinghouse Steam Turbine Generator Division WSTG-2-NP.

5. Memo from L. W. Boyd to C. A. Chandley dated September 27, 1988 transmitted copies of Turbine Missile reports as listed below:

   A. 1974 Analysis for Turbine Missiles

   B. CT-24076 SQN Methodology for Analyzing Turbine Missiles

   C. CT-24832 R1 Results of Turbine Missile Analysis for SQN U-1

   D. CT-24873 R0, Report of Turbine Missile Analysis for SQN U-2

   E. CT-24831 R1 Report of Turbine Missile Analysis for SQN U-1

6. Seimens-Westinghouse Report EC-02262, “Missile Generation Risk Assessment for Original and Retrofit Nuclear HP Rotors,” dated December 17, 2002.

TABLE 10.2.3-1

MINIMUM MECHANICAL PROPERTIES FOR LOW-PRESSURE TURBINE DISCS

	Disc 1	Disc 2	Disc 3-5
Tensile strength, min. lb/in^2	130,000	140,000	120,000
Yield strength, min. lb/in^2	120,000	130,000	110,000
Yield strength, max. lb/in^2	135,000	145,000	125,000
Elongation in 2 inches (disc hub) percent min.	14	13	15
Elongation in 2 inches (disc rim) percent min.	16	15	17
Reduction of area (disc hub) percent min.	35	35	38
Reduction of area (disc rim) percent min.	40	40	43
Impact strength (hub and rim) Charpy V-Notch ft-lb min. at room temp	50	50	50
50% Fracture appearance transition temp (disc hub and rim) °F max.	0	0	0

TABLE 10.2.3-2

SUMMARY OF CALCULATED RESULTS BASED ON
*FAILURE AT 186% OF RATED SPEED

Missile	Weight (lb)	Exit Velocity (ft/sec)	Exit Energy (10^6ft-lb)
Disc No. 1 quadrant	3790	505	15
No. 1 blade ring fragment	1210	516	5
Disc No. 2 quadrant	3750	642	24
No. 2 blade ring fragment	673	437	2
Disc No. 3 quadrant	2740	593	15
Disc No. 4 quadrant	3190	586	17
Disc No. 5 quadrant	3633	666	25

*Reference paragraph (f.) in Section 10.2.3.4.

TABLE 10.2.3-3 (Sheet 1)

EXIT MISSILE PROPERTIES FOR LOW-PRESSURE DISCS (AND FRAGMENTS) - ALL LOW PRESSURES
EXIT MISSILE PROPERTIES FOR NO. 2 LOW-PRESSURE DISC AND FRAGMENTS (LOW PRESSURE'S 1, 2, & 3)

		RATED SPEED (100% SPEED)		DESIGN OVERSPEED 120% SPEED		DESTRUCTIVE OVERSPEED 190% SPEED	
	WEIGHT (lb)	VELOCITY (ft/s)	ENERGY (10^6ft-lb)	VELOCITY (ft/s)	ENERGY (10^6ft-lb)	VELOCITY (ft/s)	ENERGY (10^6ft-lb)
90° DISC BURST							
DISC No. 1	2700	Contained		Contained		111	0.52
FRAGMENT No. 1.1	3470	Contained		Contained		111	0.66
FRAGMENT No. 1.2	2270	Contained		Contained		111	0.43
FRAGMENT No. 1.3	1920	Contained		Contained		111	0.37
90° DISC BURST							
DISC No. 2	2965	184	1.55	239	2.63	438	8.82
FRAGMENT No. 2.1	2895	184	1.52	239	2.57	438	8.61
FRAGMENT No. 2.2	545	*	*	124	0.13	-- --	-- --
FRAGMENT No. 2.3	130	-- --	-- --	-- --	-- --	481	0.47

*Exit missile energies of less than 100,000 ft-lb are not reported.

90° DISC BURST							
DISC No. 3	2775	166	1.19	292	3.67	597	15.35
FRAGMENT No. 3.1	1265	219	0.94	-- --	-- --	-- --	-- --
FRAGMENT No. 3.2	765	-- --	-- --	377	1.69	706	5.92
FRAGMENT No. 3.3	970	177	0.47	311	1.45	635	6.08

TABLE 10.2.3-3 (Sheet 2)

EXIT MISSILE PROPERTIES FOR LOW-PRESSURE DISCS (AND FRAGMENTS) - ALL LOW PRESSURES
EXIT MISSILE PROPERTIES FOR NO. 2 LOW-PRESSURE DISC AND FRAGMENTS (LOW PRESSURE'S 1, 2, & 3)

			RATED SPEED (100% SPEED)	DESIGN OVERSPEED 120% SPEED		DESTRUCTIVE OVERSPEED 190% SPEED	
	WEIGHT (lb)	VELOCITY (ft/s)	ENERGY (10^6ft-lb)	VELOCITY (ft/s)	ENERGY (10^6ft-lb)	VELOCITY (ft/s)	ENERGY (10^6ft-lb)
90° DISC BURST							
DISC No. 4	3210	369	6.78	460	10.54	778	30.17
FRAGMENT No. 4.1	480	369	1.01	460	1.58	778	4.51
FRAGMENT No. 4.2	2380	186	1.28	232	1.99	393	5.70
90° DISC BURST							
DISC No. 5	3980	408	10.29	499	15.35	-- --	-- --
DISC No. 5*	3710	-- --	-- --	-- --	-- --	752	32.59
FRAGMENT No. 5.1	340	408	0.89	499	1.31	752	2.99
FRAGMENT No. 5.2	1290	193	0.74	235	1.11	356	2.54

*Weight change due to loss of blades prior to reaching destructive overspeed.

TABLE 10.2.3-4

LOW-PRESSURE CYLINDER AND BLADE RING FRAGMENT DIMENSIONS

(REFER TO FIGURE 10.2.3-2)

FRAGMENT NUMBER	L (in) 90° SEGMENT	B (in)	H (in)	NOTES
1.1*	87.9	18.1	7.7	(c)
1.2	103.7	8.5	9.1	(c)
1.3	117.1	3.0	19.3	(c)
2.1	95.8	12.0	8.9	
2.2	36.7	9.5	5.5	(a,b)
2.2	---	9.5	5.5	
2.2	36.7	1.9	6.6	(c)
3.1	86.7	9.4	5.5	(a)
3.1	85.3	6.1	5.2	(b,c)
3.1	---	9.4	5.5	(b)
3.1	---	6.1	5.2	(c)
3.2	87.6	4.0	9.8	
4.1	81.8	4.5	4.6	
4.2	91.0	18.5	5.0	
5.1	73.2	2.5	6.6	
5.2	74.0	14.0	4.4	

*Except as indicated by the following notes, dimensions apply to 100% and 120% speed and destructive overspeed.

NOTES:
(a) Rated Speed (100% speed)
(b) Design Overspeed (120% speed)
(c) Destructive Overspeed (190% speed)

TABLE 10.2.3-5

STRIKE PROBABILITY DATA FOR MISSILES ORIGINATING

IN LOW-PRESSURE TURBINE LOW-PRESSURE 2A

Safety-Related Component or Structure	Center Disc Strike Probability Per Missile Producing Turbine Disintegration	End Disc Strike Probability Per Missile Producing Turbine Disintegration
No. 1 Reactor Containment	1.0×10^{-4}	3.7×10^{-5}
No. 2 Reactor Containment	1.2×10^{-4}	4.5×10^{-5}
Main Control Rm	7.2×10^{-5}	2.9×10^{-5}
Spent Fuel Pit	9.4×10^{-6}	4.3×10^{-6}
Diesel Generator Building	6.5×10^{-5}	2.7×10^{-5}
ERCW Intake Structure	8.5×10^{-5}	7.9×10^{-4}
All Safety-Related Components and Structures	4.5×10^{-4}	9.3×10^{-4}

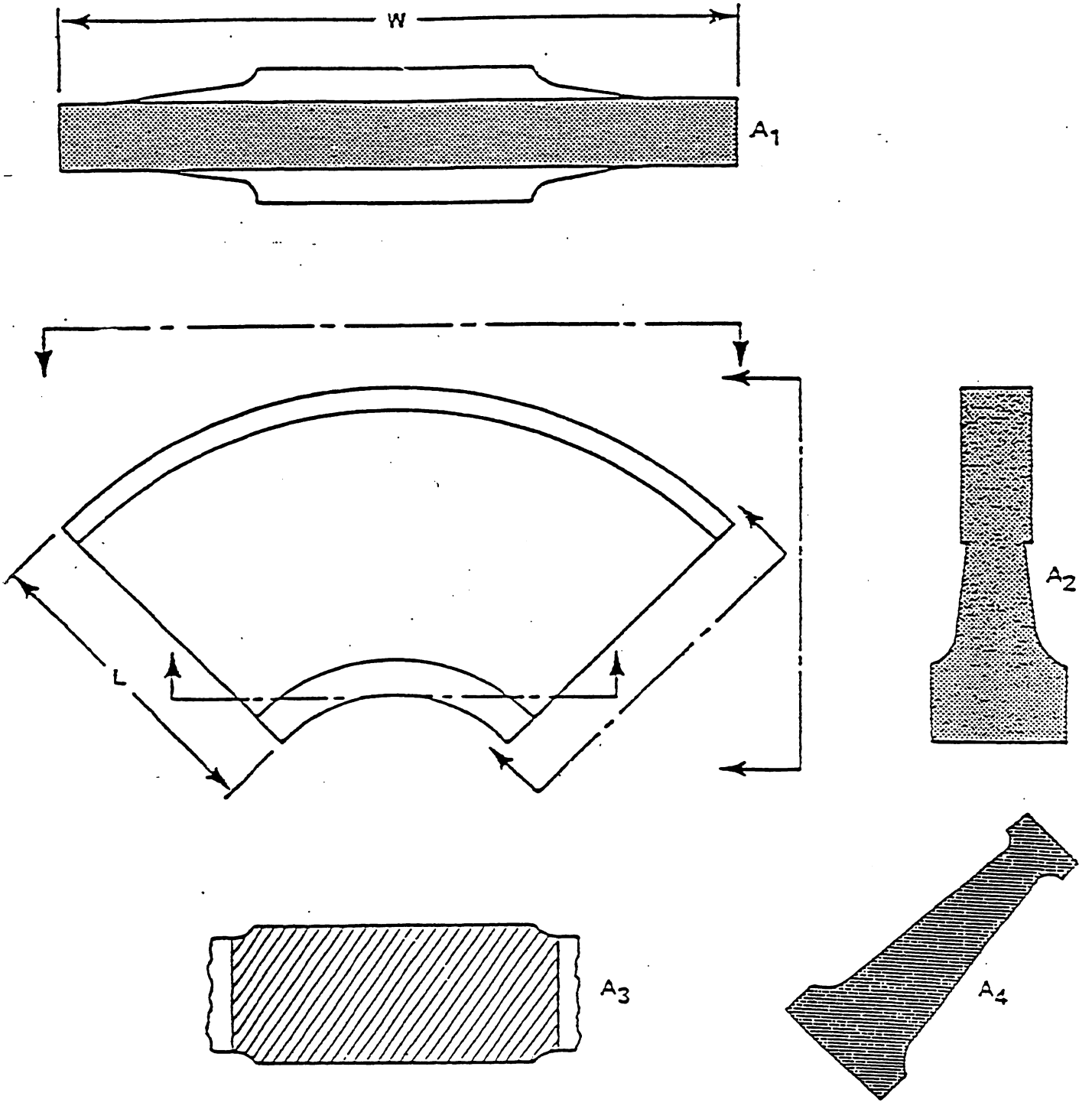

FIGURE 10.2.3-1 LP DISC MISSILES

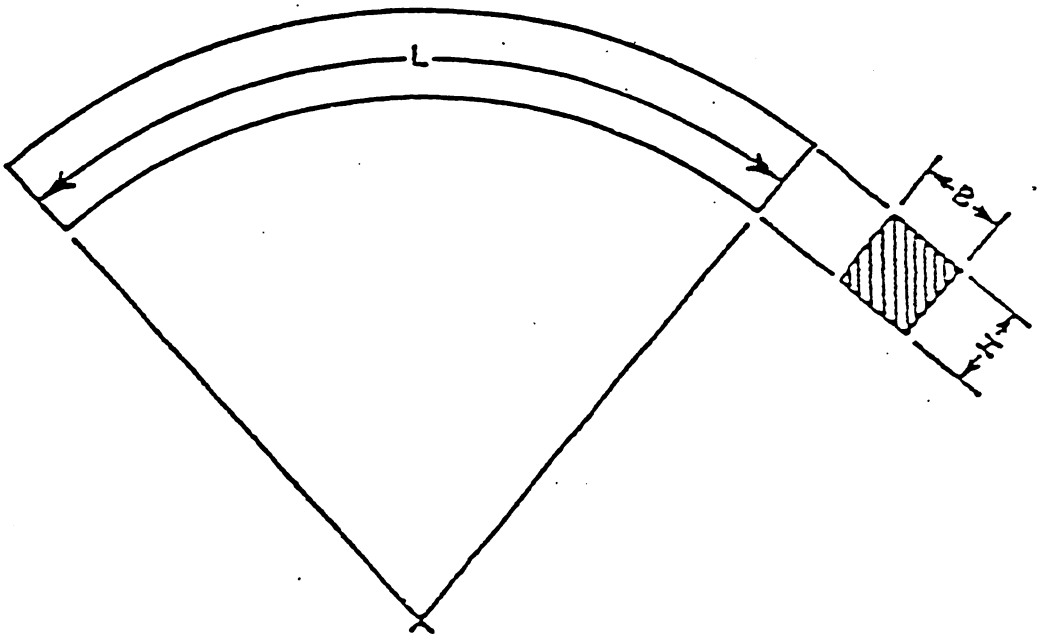

FIGURE 10.2.3-2 LP CYLINDER & BLADE RING FRAGMENTS

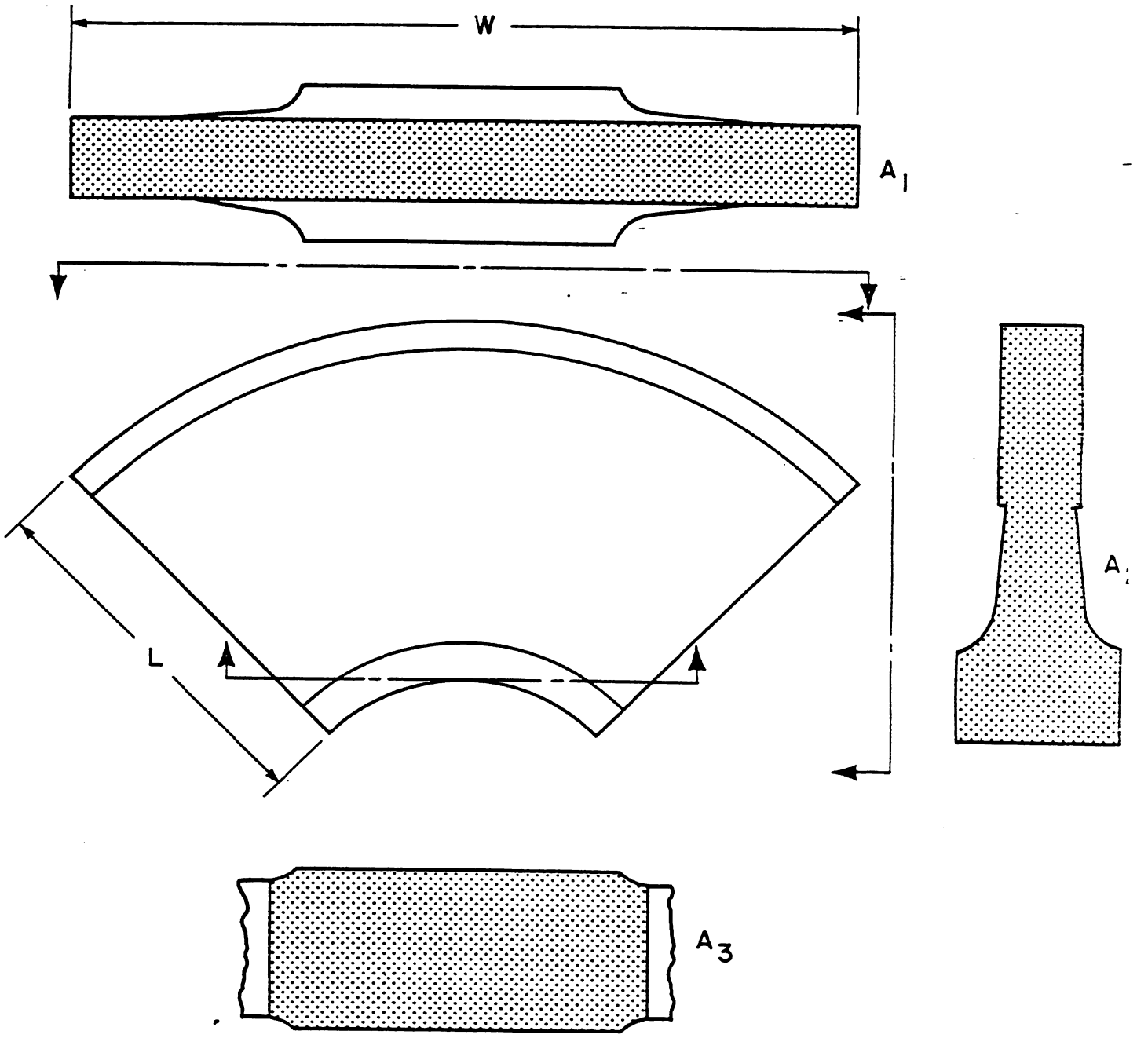

FIGURE 10.2.3-3 Physical Dimensions of Important Potential Turbine Missiles

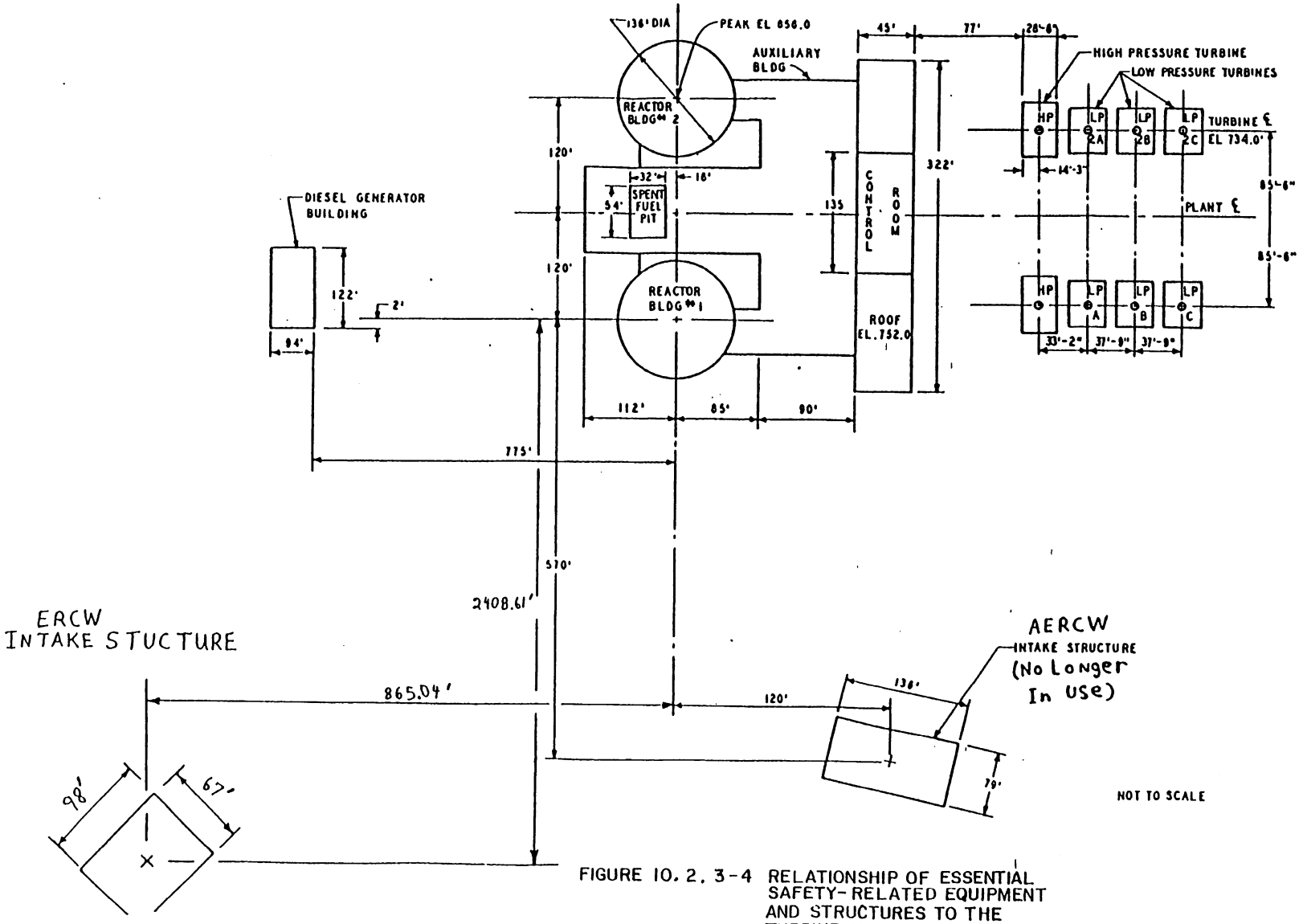

FIGURE 10.2.3-4 RELATIONSHIP OF ESSENTIAL SAFETY-RELATED EQUIPMENT AND STRUCTURES TO THE TURBINE MISSLE SOURCES.

REVISED BY AMENDMENT 6.

10.3 Main Steam Supply System

10.3.1 Design Bases

The Main Steam Supply System is designed to conduct steam from the steam generator outlets to the high-pressure turbine and to the condenser steam dump system. This system also supplies steam to the feedwater pump turbines, auxiliary feedwater pump turbines, main turbine second stage reheaters, and turbine seals.

The Main Steam Supply System includes self-actuating safety valves to provide emergency pressure relief for steam generators, and atmospheric relief valves to provide the means for plant cooldown by steam discharge to atmosphere if the turbine bypass system is not available.

The Main Steam Supply System is designed to TVA Class B requirements from the steam generator outlet out to and including the main steam line isolation valves and flued-anchors. A failure or malfunction of any of the TVA Class B portion of the system must not:

a. Reduce flow capability of the Auxiliary Feedwater System.
b. Render inoperative any engineered safeguard system.
c. Initiate a loss-of-coolant accident.
d. Cause failure of any other steam (or feedwater) line.
e. Result in the containment pressure exceeding design value.
f. Impair the containment integrity.
g. Allow uncontrolled blowdown of more than one steam generator.

The remainder of the Main Steam Supply System, all piping downstream of the main steam line isolation valves, is designed to the requirements of TVA Class H (ANSI B31.1) or TVA Class L.

The main steam flow restrictor limits steam flow, in event of a steam line break downstream of the flow restrictor, to safety analysis limits which is required to reduce the probability of fuel clad damage as discussed in Section 15.4.2.

10.3.2 System Design Description

10.3.2.1 System Design

The Main Steam Supply System is shown schematically on Figure 10.3.2-1. The steam flows from each of four steam generators through containment and the main steam line isolation valves in a 32-inch outside diameter pipe. Each steam supply includes a flow restrictor, which will act to limit the maximum flow and the resulting thrust force created by a steam line break. In Unit 2, the flow restrictor is located immediately downstream of the steam generator. The Unit 1 replacement steam generators incorporated an integral flow limiter into the main steam nozzle, eliminating the need for the flow restrictor in the main steam line piping.

The steam generator safety valves and atmospheric relief valves are located upstream of the main steam line isolation valves. There are five safety valves per steam generator with a minimum required rated capacity of 3,917,000 lb/h combined. The steam generator safety valves provide emergency pressure relief for the steam generators in the event that steam generation exceeds steam consumption. For safety valve settings refer to Section 3/4.7.1.1 of the Technical Specification.

There is one atmospheric relief valve per steam generator. These valves have a capacity as tabulated in Table 10.1-1.

These atmospheric relief valves provide the means for plant cooldown by steam discharge to the atmosphere if the condenser steam dump is not available. These valves will also provide a means of steam generator pressure control if condenser steam dump is not available and by so doing avoid unnecessary lifting of steam generator safety valves. Pressure setting of these valves is slightly less than the relief pressure of the safety valves.

The maximum actual capacity at a steam pressure of 1085 lb/in^{2}g of any single safety or atmospheric relief valve does not exceed a flow of 890,000 lb/h to limit steam release if any one valve is inadvertently stuck open.

Steam supply for the auxiliary feedwater pump turbines is provided by one connection each on two of the main steam lines upstream of the main steam line isolation valves. Connecting into two steam generator steam lines upstream of the main steam line isolation valve provides both redundancy and dependability of supply.

The main steam line isolation and main steam isolation bypass valves are provided to protect the plant during the following accident situations:

1. Break in the steam line from one steam generator inside containment or upstream of MSIV.
2. Break in the steam header downstream of the MSIVs.
3. Steam generator tube rupture.

The main steam line isolation valves are 32-inch globe Y type, straight through flow, air to open, spring to close These valves were modified to prevent reverse flow which has allowed elimination of the downstream check valve. These valves are capable of closing within the required ESF actuation time. In series with and downstream of the isolation valve is a check valve body (internals removed) which is part of the TVA Class B pressure boundary.

In parallel with the main steam isolation valve is a 2-inch globe type main steam isolation bypass valve which is used to provide steam for downstream pipe warming and to equalize the pressure across the main steam isolation valve (MSIV) prior to opening it during plant startup. The main steam isolation bypass valves are air to open, fail-close valves which are capable of closing within 10 seconds of receipt of the same isolation signals provided to the MSIVs.

For accident situation No. 1, the steam generator associated with the damaged line discharges completely into the containment or main steam valve room. The other steam generators would act to feed steam through the interconnecting header to reverse flow into the damaged line and then release into the containment or steam valve room. The closure times specified above for the isolation valves will limit containment pressure rise below design pressure. (See Section 6.2.)

For accident situation No. 2, the time requirements established in situation No. 1 are the limiting case and are satisfactory for requirements resulting from this situation.

For accident situation No. 3, this requirement is not limiting. A fast acting valve is not required. The isolation valves serve to limit the total amount of primary coolant leakage during the shutdown period by isolating the damaged steam generator after pressure is reduced below steam generator shell side design pressure.

The main steam lines downstream of the main steam line isolation valves are 36-inch outside diameter pipes. Four main steam turbine stop valves and turbine control valves are provided at the high pressure turbine inlet. The steam lines are cross-connected ahead of the turbine stop valves. The cross connections provide both an entrance to the Condenser Steam Dump System and a distribution manifold for the turbine stop valves. The turbine is described in Section 10.2, Turbine-Generator. The Turbine Bypass System is described in Section 10.4, Other Features of Steam and Power Conversion System. The Main Steam Supply System interface with the Auxiliary Feedwater and Blowdown Systems are described in the appropriate subsections in Section 10.4, Other Features of Steam and Power Conversion System.

Each Unit 1steam line flow restrictor is installed in the steam outlet nozzle integral to each Unit 1 replacement steam generator. Steam reaches the 32-inch outside diameter stream outlet nozzle after passing through seven, 6-inch inside diameter flow limiter inserts. The nickel alloy 690 inserts are installed in parallel at the nozzle inlet.

Each Unit 2 steam line flow restrictor assembly includes a 16-inch inconel-throat venturi-nozzle section and a carbon steel discharge cone welded to the throat. The complete restrictor assembly is fitted inside a length of main steam pipe and attached to the pipe by a circumferential weld at the discharge. Materials, welding, and inspection requirements applied in fabrication of the restrictors conform to ANSI B31.1 requirements.

10.3.2.2 Material Compatibility, Codes, and Standards

All (pressure containing) components in the Main Steam Supply System are carbon steel, except for the Unit 1 Main Steam Trap Drain Piping from the condensate pots to the condenser, which is stainless steel. Carbon steel components, damaged by erosion corrosion, may be replaced with Cr Mo Steel or other erosion resistant steel.

Applicable codes, standards, and design conditions (pressure and temperature) are shown in Table 10.3.2-1.

10.3.2.3 NRC Bulletin 88-02 Analysis

To address the issue of rapidly propagating fatigue cracks in steam generator (S/G) tubes as identified in NRC Bulletin 88-02, a thermal-hydraulic analysis of the S/G secondary side was performed by Westinghouse as detailed in WCAP-12289/12290. This analysis was performed at rated steam flow and at a pressure of 800 psia for conservatism. The result of the analysis was that one tube in Unit 1 and two tubes in Unit 2 were required to be removed from service. No other tubes were identified as susceptible. The Sequoyah units have therefore met the requirements of the bulletin, provided modifications are not made to increase the steam flow rate, to decrease the operating steam pressure below 800 psia, or to significantly affect the S/G secondary side recirculating flow (see Section 5.5.2.3.4).

A subsequent evaluation of the Model 51 S/G tubes was performed in support of the 1.3% power uprate program for Units 1 and 2 (Reference Westinghouse WCAP-15725, September, 2001). This evaluation concluded that a few additional tubes would become susceptible to high-cycle fatigue at the higher power if the operating steam pressure falls below approximately 800 psia. These tubes would need to be repaired if this occurs.

The materials for piping and valves in the TVA Class B portion of the system are impact tested to plus (+) 10°F as per Appendix I, ANSI B31.7, for pipe and fittings and as per Appendix E, Draft ASME Pump and Valve Code for Nuclear Power for valves. The test temperature of plus (+) 10°F is related to a minimum service temperature of plus (+) 70° (hydro test water temperature).

10.3.3 Design Evaluation

The portion of the Main Steam Supply System designed to TVA Class B requirements is Category I seismically qualified. The TVA Class B portion of the system is protected from missiles and pipe whip by restraints, physical separation, or barriers. Redundant electrical power and air supplies assure reliable system operation, and safe shutdown capability. Redundant steam supply connections are provided for the auxiliary feedwater steam turbine.

A tabulation of all seismic Category I valves in the Main Steam Supply System relied upon either to assure safe plant shutdown or to mitigate the consequences of a transient or accident is provided in Table 10.3.3-1. This tabulation also includes the type and size of valve, the actuation type, and the environmental design criteria to which the valves are qualified, as stated in the design specifications.

The safety valves provide over 100 percent relieving capacity to protect the system from overpressure. The relief valves, since they have a set pressure slightly lower than the safety valves, prevent excessive lifting of safety valves. Four atmospheric relief valves have been provided per unit (one per steam generator). Only two valves are required for plant cooldown following any credible accident.

The atmospheric relief valves may also be used, in the event of a flood (see FSAR Section 2.4A.2.2), to maintain the pressure in the secondary side of the steam generators. The atmospheric relief valves can be adjusted by controls in the main or auxiliary control room. Also, a manual loading station and the relief valve handwheel provide additional backup control for each relief valve.

The Main Steam Supply System is designed to comply with the 1974 Edition of ASME Section XI, Inservice Inspection of Nuclear Power Plant Components, to the extent practical under the original design. Class 2 piping and valves which are not accessible for examination by volumetric and surface methods as outlined in the Code will be listed in the detailed inservice inspection program and will be inspected for signs of leakage while under pressure. Inservice testing of Code Class 2 valves will be tested as outlined in the ASME Inservice Valve Testing Program basis document which is referenced in Section 6.8 of the FSAR.

See Section 3.11 and subsection 10.3.6 for Environmental Design of the Main Steam Supply System. Accident considerations, situations, and/or analysis are discussed in subsections 10.3.1 and 10.3.2, and Chapter 15.

In response to a licensing question concerning the NRC staff position (BTP RSB 5-1) for the Residual Heat Removal System (RHR) and the steam generator relief valves, operators, air and power supplies; the following information on the atmospheric relief valves was provided.

The Sequoyah (SQN) steam generator powered atmospheric relief valves are seismically qualified. The air supplies to these valves are from the plant safety grade auxiliary control air system. The power and air supplies to these vales are trainized (two valves per train), receiving necessary electrical power from the 125-volt vital battery system.

The most limiting single failure would be the loss of one train of the safety grade air system, or one channel of vital power. This would prevent control room initiated steam relief via two of the four power-operated relief valves. Only two valves are required. Operating personnel could manually release steam from any affected valves (via handwheels outside of containment).

The second most limiting single failure would be a mechanical breakdown within one of these atmospheric relief valves so that the valve would be "frozen" shut. In this case, the remaining three relief valves are more than sufficient to maintain safe shutdown.

The ability to manually operate the atmospheric relief valves and to communicate with the main control room (MCR) at the same time was verified during preoperational tests W-8.3, "Engineered Safety Features Actuation System Operational Test," and W-10.3, "Steam Dump Control."

A steam flow restriction is supplied in each main steam line inside the containment building to limit flow in the event of a steam line break downstream of the restrictor. The restriction is located as close as feasible to the steam generator outlet nozzle in order to minimize piping preceding the restriction, thereby reducing the probability of a steam line break upstream of the restrictor. Being fitted inside a length of main steam pipe, a steam flow restrictor is not a pressure boundary component. However, component integrity is assured by satisfaction of ANSI B31.1 requirements. Westinghouse and CENP-Westinghouse approved the weld procedures, welders test qualifications, inspection procedures, materials, and the quality assurance program used in design and fabrication of the venturi nozzle for the original and replacement steam generators, respectively.

10.3.4 Tests and Inspections

Performance tests of individual components in manufacturer's shop, integrated preoperational tests of the whole system, and periodic performance tests of the actuation circuitry and mechanical components in accordance with approved plant procedures will assure reliable performance.

Vibration tests on system piping are also performed during the preoperational tests. Details of the vibration operational test program are provided in subsection 3.9.1.1.

Preoperational test requirements are given in Chapter 14.

10.3.5 Water Chemistry

10.3.5.1 Purpose

Water purity in the secondary system, and in the steam generators in particular, is maintained within specified limits in order to minimize fouling of steam generator heat transfer surfaces and maintain steam generator tube integrity.

10.3.5.2 Chemistry Specifications

Specifications for chemistry control in secondary systems such as steam generator steam side, feedwater, and condensate chemistry for various operating modes and conditions have been established with consideration given to various sources. The sources include, but are not limited to PWR experience, Westinghouse specifications, and Steam Generator Owner's Group EPRI guidelines.

10.3.5.3 Chemistry Control

The selection of secondary water chemistry is governed by the secondary system operating mode or condition. A discussion of the water chemistry for these modes and conditions is presented below.

1. Power Operation. During power operation, the condensate, feedwater, and secondary side steam generator chemistries are maintained within the specified limits by providing makeup water of adequate purity and by chemical treatment of the condensate and feedwater systems. Chemical addition systems inject the selected chemical solution into the condensate system. Chemical treatment is accomplished as described in Section 5.5.2.

   Steam generator steam side chemistry during power operations is controlled by steam generator blowdown (subsection 10.4.8), condensate polishing and chemical treatment of the feedwater.

   a. Blowdown - To minimize corrosion and sludge accumulation, control of contaminants dissolved or suspended is required. The quantity of contaminants is effectively controlled by blowing down each steam generator. In the event of primary to secondary leakage or condenser inleakage, blowdown is employed to keep the contaminants within limits. Blowdown contributes to the control of radioactive iodine which may occur in the event of primary to secondary leakage.

   b. Condensate Polishing - The Condensate Cleanup System is described in subsection 10.4.6.

   c. Chemical Treatment - Any combination of chemical additives is supplied by the Feedwater Treatment System and is transported through the condensate and main feedwater lines to the steam generator and is carried along with steam through piping, feedwater heaters, and turbines. See Section 5.5.2.

2. Auxiliary Feedwater. During extended periods of Auxiliary Feedwater use, oxygen scavenging and corrosion control chemicals can be manually added to the Steam Generators. During unit heatup and auxiliary feedwater operation, boric acid can be added to the steam generators.

3. Wet Layup. Hydrazine or carbohydrazide, Dimethylamine, and ammonia are normally added during wet layup of the steam generators.

4. Auxiliary System Support. The hydrazine and ammonia addition systems are both capable of feeding various chemicals to the auxiliary boiler feedwater pump suction. Thus, corrosion inhibitors and oxygen scavenging chemicals are available to the Auxiliary Boiler System.

10.3.5.4 Effect of Water Chemistry on the Radioactive Iodine Partition Coefficient

As a result of the basicity of the secondary side , the radioiodine partition coefficents for both the steam generator and the air ejector system are increased (i.e., a greater portion of radioiodine remains in the liquid phase). Partitioning factors to estimated dose are utilized only for inadvertent steam releases through the atmospheric reliefs. These releases can be estimated based on liquid samples.

10.3.6 Instrument Application

Automatic operation of the main steam line isolation valve is initiated by a main steam isolation signal (see Chapter 7). Provisions are made for remote manual operation from the control room. These valves fail closed on loss of electric power or control air.

Control of the atmospheric relief valves is: (1) a non-safety grade automatic modulating controller using steam line pressure with remote manual control of pressure setpoint from the control room, and (2) safety grade remote manual controls for positive open/close action from the MRC.

In response to licensing question concerning IE Information Notice 79-22 on environmental qualification of control systems, TVA performed a systematic (matrix) evaluation of the environmental effects resulting from high-energy pipe breaks inside and outside containment upon nonsafety-related systems. Specifically, safety features required to mitigate the consequences of high-energy pipe break and those required to obtain and maintain a safe shutdown following such an event were evaluated to determine if a single inappropriate actuation of an interfacing nonsafety-related system could unacceptably affect the required safety feature. TVA's conclusion is that although there is a possibility for disruptive signals to be generated, these are in every case acceptable because the operator will always have sufficient indication and time to take corrective action. Consequently, a safe shutdown can be achieved even if a postulated accident is compounded by environmentally induced inappropriate actuation. Operating instructions have been modified as an additional precaution to preclude the event or to alert the operator to the possibility of the event.

The evaluation concerning the environmental effects on the atmospheric relief and main steam isolation bypass valve controls is as follows. The control system for the atmospheric relief valves could be affected by high-energy pipe breaks in the main steam valve room. This inappropriate opening is considered to be acceptable because (1) adequate annunciations provided to alert the operator to the event, (2) adequate time is available for operator action (3) the control system design assures that the operator can override the inappropriate open signal.

An inappropriate opening of a main steam isolation bypass valve would defeat steam generator isolation. Administrative controls require the valves be closed and their control switches to be placed in the "close" position after the main steam isolation valves are open. This guards against the valve actuation due to environmental effects in the steam valve vaults following a steam line break or flood.

10.3.7 References

1.0 SQN Design Criteria DC-V-4.1.1, Main Steam System and DC-V-21.0, Environmental Design.

2.0 Westinghouse Report NSD-MWR-0215, The Morpholine/Boric Acid Application Document For Tennessee Valley Authority, Sequoyah Units 1 and 2 Nuclear Power Plants.

3.0 EPRI Report, PWR Secondary Water Chemistry Guidelines.

4.0 EPRI Report NP-5558-SL, Boric Acid Application Guidelines for Intergranular Corrosion, December 1990.

5.0 EPRI Report TR-103117, Effect of Boric Acid on Intergranular Corrosion in Tube Support Plate Crevices, October 1993.

TABLE 10.3.2-1

MAIN STEAM SUPPLY SYSTEM
APPLICABLE CODES, STANDARDS, AND DESIGN CONDITIONS

Steam Generator Shell

a. Design pressure, 1085 lb/in^{2}g
b. Design temperature, 600°F
c. Code, ASME Boiler and Pressure Vessel Code, Section III

Main Steam Piping

a. Design pressure, 1085 lb/in^{2}g
b. Design temperature, 600°F
c. TVA Class B - Code, ANSI B31.1, Code for Pressure Piping with inspection, test, and fabrication to ANSI B31.7 in lieu of applicable Code cases
TVA Class H - Code, ANSI B31.1, Code for Pressure Piping

Main Steam Isolation Valves

a. Design pressure, 1085 lb/in^{2}g
b. Design temperature, 600°F
c. Code, Draft ASME Code for Pumps and Valves for Nuclear Power, 1968/1970 March Addenda, Class II

Main Steam Check Valves (Internals Removed)*

a. Design pressure, 1085 lb/in^{2}g
b. Design temperature, 600°F
c. Code, ASME Boiler and Pressure Vessel Code, Section III, Class 2, 1971 with Winter 71 Addenda; Code Case 1519

Main Steam Safety Valves

a. Design pressure, 1085 lb/in^{2}g
b. Design temperature, 600°F
c. Code, Draft ASME Code for Pumps and Valves for Nuclear Power, Class II

Main Steam Atmospheric Relief Valves

a. Design pressure, 1085 lb/in^{2}g
b. Design temperature, 600°F
c. Code, Draft ASME Code for Pumps and Valves for Nuclear Power, Class II

Main Steam Isolation Bypass Valves

a. Design pressure, 1085 lb/in^{2}g
b. Design temperature, 600°F
c. Code, ASME Section III, Class 2

*Non-functional - Valve body provides pressure boundary

TABLE 10.3.3-1

MAIN STEAM SUPPLY SYSTEM
SEISMIC CATEGORY I VALVES

FSAR Figure No.	Type	Size	Activation	Identification No.
10.3.2-1	"Y" Globe	32 inch	Cylinder	FCV-1-4
10.3.2-1	"Y" Globe	32 inch	Cylinder	FCV-1-11
10.3.2-1	"Y" Globe	32 inch	Cylinder	FCV-1-22
10.3.2-1	"Y" Globe	32 inch	Cylinder	FCV-1-29
10.3.2-1	Check	32 inch	1-623	
10.3.2-1	Check	32 inch	1-624	
10.3.2-1	Check	32 inch	1-625	
10.3.2-1	Check	32 inch	1-626	
10.3.2-1	Safety-Angle	6 x 10 inch	Steam Pressure/ Spring	1-512 through 1-531
10.3.2-1	Relief	8 inch	Cylinder	PCV-1-5
10.3.2-1	Relief	8 inch	Cylinder	PCV-1-12
10.3.2-1	Relief	8 inch	Cylinder	PCV-1-23
10.3.2-1	Relief	8 inch	Cylinder	PCV-1-30
10.3.2-1	Globe	2 inch	Diaphragm	FCV-1-147
10.3.2-1	Globe	2 inch	Diaphragm	FCV-1-148
10.3.2-1	Globe	2 inch	Diaphragm	FCV-1-149
10.3.2-1	Globe	2 inch	Diaphragm	FCV-1-150

Note 1: Refer to SQN DC-V-21.0, Environmental Design

Note 2: Valve internals removed; valve performs no isolation function. Check valve is non-functional. Performs pressure boundary only.

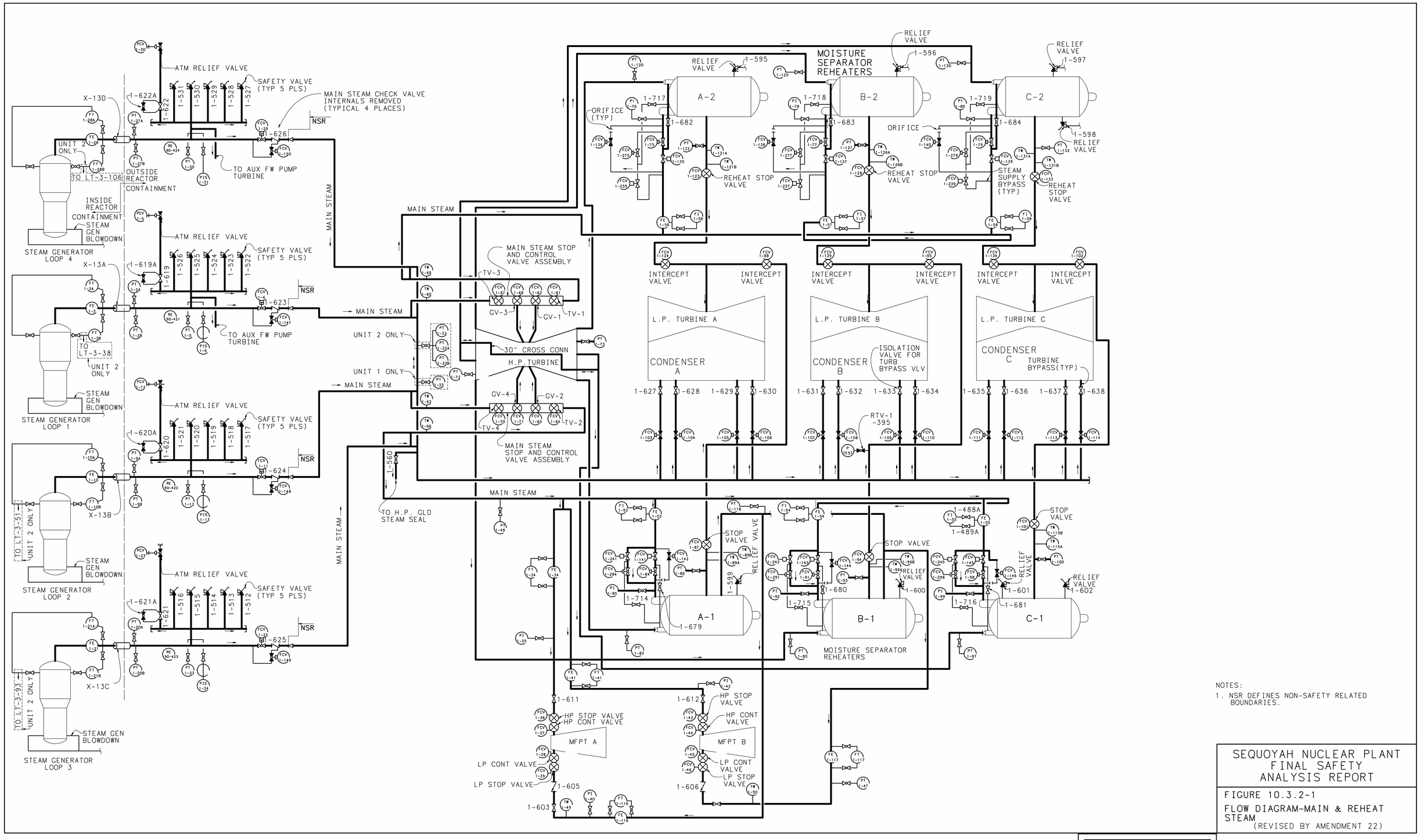

NOTES:

1. NSR DEFINES NON-SAFETY RELATED BOUNDARIES.

SEQUOYAH NUCLEAR PLANT
FINAL SAFETY ANALYSIS REPORT

FIGURE 10.3.2-1

FLOW DIAGRAM-MAIN & REHEAT STEAM
(REVISED BY AMENDMENT 22)

CAD MAINTAINED DRAWING

10.4 OTHER FEATURES OF STEAM AND POWER CONVERSION SYSTEM

10.4.1 Main Condenser

10.4.1.1 Design Bases

The design basis for the main condenser is to provide a heat removal rate of at least 7.829 x 10^9 Btu/hr per unit for the steam system by condensing the steam from the turbine exhaust at a back pressure of 1.88 inches of mercury, absolute. During a cold startup, the condenser must also deaerate the initial inventory of water contained within the condensate-feedwater system.

10.4.1.2 System Description

To provide sufficient capability to meet the functional requirements as stated in subsection 10.4.1.1, the main condenser has been designed with the following specifications:

Total surface area, ft^2	757,952
Circulating water quantity, gal/min	530,600
Circulating water pressure drop through condenser, ft	11.76
Circulating water temperature (yearly average), °F	61
Circulating water temperature rise, °F	29.51
Number of shells	3
Number of passes/shell	1
Tubes:	
Effective length, ft	49'-9"
Number Tubes, Size (inches OD), Birmingham Wire Gauge (BWG)	
Internal Condensing Zone	71,220 - 3/4- 24
Impingement (Peripheral) Condensing Zone	3,132 - 3/4-22
Air Cooling Section	3,240 - 3/4-24
Material	Titanium
Tubesheets:	
Base Material, Thickness (inches)	Carbon Steel -1 3/8
Cladding Material, Thickness (inches)	Titanium-3/16
Cleanliness, percent	95
Duty, 10^9 Btu/hr	7.829
Design pressure:	
Shell, lb/in^2g	20
Hotwell, lb/in^2g	20
Waterboxes, lb/in^2g	25
Hotwell storage/shell (normal), gallons	11,000
Oxygen content of condensate, cc/liter	0.005
Bypass system:	
Flow/shell, lb/h	1,987,400
Pressure (at nozzle), lb/in^2g	250
Enthalpy, Btu/lb	1197.5
Air inleakage/shell (SCFM)	8

The condensers are of conventional design, having an expansion joint in the neck and the required impingement baffles to protect the tubes from incoming drains and steam dumps. The hotwell of the condenser has a water storage capacity equivalent to approximately 2 minutes of full load operation. Cross connections are provided for equalization of pressure between condenser shell. Provisions have been made for mounting of three 1/3 capacity low-pressure extraction feedwater heaters in the neck of each condenser.

At the design point, the Main Condenser System will produce a back pressure 1.88 inch Hg absolute when operating at rated turbine output with 61°F cooling water and 95 percent clean tubes. For cooling water temperature variation and various modes of operation of the cooling tower, see subsection 10.4.5, Condenser Cooling Water System. A condenser tube cleaning system is provided to clean the condenser tubes.

The condenser is designed to remove dissolved gases from the condensate, limiting oxygen content to 0.005 cc per liter at any load during normal operation.

During startup the initial inventory of water contained within the Condensate Feedwater System can be deaerated using steam from the opposite unit or auxiliary boiler. A recirculation pipe is run from immediately upstream of the feedwater isolation valves to a perforated pipe running across the full width of each hotwell section. Recirculated condensate is sprayed across the condenser while being deaerated with steam being sprayed up through it from steam sparging nozzles located in a header arrangement in the hotwell.

The condenser can accept a bypass steam flow of approximately 40 percent of maximum guaranteed steam generator flow, without exceeding the turbine low vacuum trip point, or an exhaust hood temperature of 175°F, with circulating water temperature of up to 85°F. This bypass steam dump to the condenser is in addition to the normal duty expected with a throttle flow of 60 percent of maximum guaranteed steam generator flow.

The correct secondary cycle water inventory is maintained by the automatic bypass-makeup condensate system. The level controller(s), which are sensitive to the hotwell level, position the bypass valve or makeup valves (to or from the condensate storage tank) as required to maintain the hotwell water level within preset limits.

10.4.1.3 Safety Evaluation

The inventory of radioactive contaminants in the main condensers is a function of the primary coolant radioactivity, the steam generator primary-to-secondary leak rate, and the steam generator and condenser partition factors. Table 10.4.1-1 gives the calculated radioactivity concentrations for a primary-to-secondary leak rate of 20 gallons/day and 0.25 percent failed fuel during power operation. The factors and coefficients are the same as those used in subsection 11.1.

The possible mechanisms for hydrogen production in the secondary system are radiolysis of secondary side water, corrosion, and release of hydrogen from the reactor coolant in the event of primary-to-secondary leakage. Hydrogen generated via these mechanisms is transported to the condenser. Conservative estimates of the extent of hydrogen production by radiolysis shows that negligible amounts of hydrogen (less than 0.001 SCFM) are formed. The water chemistry of the secondary system is such that hydrogen evolution due to corrosion is also

negligible. Of the three possible hydrogen producing mechanisms, only primary-to-secondary leakage has the potential for supplying measurable quantities of hydrogen. However, for large primary-to-secondary leakage rates (1.0 gal/min/unit), the rate of hydrogen release would be less than 0.01 SCFM. This rate is small when compared to the condenser evacuation system capacity of 30 SCFM at 1 inch Hg absolute suction pressure with two vacuum pumps in operation. Thus, hydrogen entering the condenser is effectively exhausted via condenser evacuation system and the potential for hydrogen buildup is negligible.

The condenser could become ineffective because of the loss of some or all of its cooling water and/or excessive air leakage. Either of the above conditions would cause the condenser pressure to increase and upon reaching the setpoint specified in operating procedures, the turbine would be manually tripped. An automatic backup trip is also provided for transient and pressure spike conditions to automatically trip the turbine. Consequently, rising condenser pressure will cause a turbine trip which will produce a reactor trip for power levels greater than 50 percent.

The residual heat would then be removed as steam through the turbine bypass valves until they were tripped closed because of a condenser pressure of approximately 6 inches to 7 inches Hg absolute or the loss of the circulating water pumps. After the turbine bypass valves are tripped closed, the residual heat is removed as steam through the SG power operated relief valves and/or the ASME Code safety valves to the atmosphere.

10.4.1.4 Inspection and Testing

Prior to operation, the condenser was tested for leaks by completely filling the shell with condensate. Currently, other NDT methods (such as eddy current testing to identify leaking condenser tubes) are used to test the condenser. Manways provide access to waterboxes, tube sheets, lower steam inlet section, shell, and hotwell for purposes of inspection, repair or tube plugging.

10.4.1.5 Instrumentation

Sufficient level controllers, level switches, pressure switches, temperature switches, etc., were provided to permit personnel to conveniently and safely operate this condenser system.

10.4.2 Main Condenser Evacuation System

10.4.2.1 Design Bases

The design basis for the main condenser evacuation system is to create and maintain condenser back pressure at 1.0 inch Hg absolute by removing noncondensable gas and air inleakage. The design evacuation rate is 30 SCFM at the above suction pressure and with two pumps in operation.

10.4.2.2 System Description

The Main Condenser Evacuation System is shown on Figure 10.4.2-1. To provide sufficient capability to meet the functional requirements as stated in subsection 10.4.2.1, the Main

Condenser Evacuation System has been designed with the following specifications:

Type of evacuating equipment	Mechanical vacuum pumps
Number of vacuum pumps, per unit	3
Air capacity at suction pressure of 1 inch Hg absolute, SCFM, per pump at normal operation	15
Air capacity at suction pressure of 15 inches Hg absolute, SCFM per pump at startup	1000

The vacuum pumps are two-stage liquid ring type pumps.

Two pumps, operating in parallel, are adequate for the removal of the maximum expected air inleakage of 24 SCFM. The third vacuum pump is arranged to start automatically on decreasing condenser vacuum.

The discharge from all three vacuum pumps can be routed through a HEPA filter-charcoal adsorber train, which consists of an electric duct heater, HEPA filter unit (optional), charcoal adsorber unit (optional), and connecting piping. The discharge is monitored with a low, mid, and a high range noble gas effluent radiation detector before it is exhausted to the outdoors from the turbine roof ventilators. Refer to Figure 10.4.2-1.

The system is designed to cleanup approximately 45 cfm of condenser exhaust. During unit startup, periods of high condenser leakage or periods of zero or low secondary side activity, the flow rate will be allowed to bypass the cleanup system assembly. A pressure differential switch will automatically operate to open the bypass dampers upon an excessive filter pressure drop.

The optional charcoal adsorber must remain dry for efficient operation. Since the condenser exhaust may be expected to be approximately 100°F and 100 percent relative humidity, the 500 watt duct heater is designed to heat the exhaust approximately 30°F and to thus lower the relative humidity to approximately 50 percent before entering the filter units.

10.4.2.3 Safety Evaluation

Depending upon actual air in-leakage to the condenser one or two of the three vacuum pumps are considered to be spares. These spare pump(s) automatically start when the condenser back pressure increases. Should the back pressure continue to increase (because of inadequate air removal capability or a partial loss of cooling water), a high back pressure alarm would sound and the turbine may be manually tripped and consequently may cause a reactor trip. However, an auto trip will occur if back pressure continues to increase beyond the alarmed setpoint.

Details of the radiological evaluation of the condenser evacuation system are contained in Chapter 11.

10.4.2.4 Inspection and Testing

The operating characteristics for each vacuum pump will be established throughout the operating range by factory tests.

A flowmeter is provided in the discharge of each vacuum pump. Periodic readings of these flowmeters will indicate whether or not the air inleakage to the condenser is within acceptable limits. These readings will also indicate the effectiveness of the operating vacuum pumps.

10.4.2.5 Instrumentation

The necessary pressure and temperature switches are provided to automatically start the standby vacuum pump or shutdown a malfunctioning (vacuum) pump. Radiation monitors are provided to detect any radioactivity in the vacuum pump discharge.

10.4.3 Turbine Gland Sealing System

10.4.3.1 Design Bases

The turbine gland sealing is designed to provide means of sealing the main turbine shafts and valve stems and the main feed pump turbine shafts, using steam from upstream of the turbine stop valves. This sealing can be accomplished automatically with steam supply pressures of from 185 to 1100 lb/in^2a. Sealing of the turbine glands with the steam supply pressure below 185 psia can be accomplished by manually or remotely opening the steam seal regulating valve bypass valve.

Steam from the opposite unit or auxiliary boiler can be supplied to the seals during startup.

10.4.3.2 System Description

The purpose of the gland steam sealing system is to prevent leakage of air into the turbine casing, and, conversely, prevent the leakage of steam into the turbine room when turbine casing is pressurized.

The system utilizes labyrinth type seals. Each seal is equipped with two annular shaped chambers which are located among the packing rings. The chamber nearest the turbine casing is maintained at a pressure of approximately 16 lb/in^2a by the admission of sealing steam or the controlled leak off of higher-pressure steam.

The outer chamber is maintained at a slight vacuum (approximately 3 to 5 inches water) by the Gland Steam Exhauster System. This vacuum causes the sealing steam to leak outward and mix with the inward leaking air. This mixture flows to gland steam condenser where most of the steam component is condensed and returned to the secondary cycle. The noncondensables are forced, by the exhauster, through piping to the outside of the building.

10.4.3.3 Safety Evaluation

Since this is a PWR, radioactive steam in the Steam Seal System is of very small consequence. The exhauster discharge is piped outside of the building to prevent the possibility of accumulating radioactive particles in a stagnant building area. Information regarding the design for monitoring radioactivity is presented in FSAR Section 12.1. The presence of radioactivity in the secondary cycle (main steam) which could leak through the turbine gland seals (in the event

that the gland steam condenser exhausters fail to work properly) would be detected in the discharge of the main condenser vacuum pumps. The radiological effects of this system are negligible during normal operation.

In the event one exhauster is lost, the operator will isolate the ineffective exhauster and start the spare (exhauster). Should both exhausters fail, seal steam will leak into the turbine room.

If the steam seal supply fails, excess air leakage will probably trip the turbine because of low vacuum.

A number of safety valves and rupture diaphragms are installed on this system to protect the various components against high pressure.

10.4.3.4 Inspection and Testing

This equipment will be tested by the vendor in accordance with the various applicable code requirements. Periodic tests will be performed by the operator to verify the integrity of this system with respect to its capability of maintaining the turbine seals.

10.4.3.5 Instrumentation

Sufficient instrumentation has been provided to satisfy all system functional requirements and to permit safe, convenient operation by plant personnel.

System performance is constantly monitored by measuring gland steam exhauster vacuum and supply steam header pressure.

10.4.4 Turbine Bypass System

10.4.4.1 Design Bases

The Turbine Bypass System's design basis reduces the magnitude of nuclear system transients following large turbine load reductions by dumping throttle steam directly to the main condenser, thereby creating an artificial load on the reactor.

The Turbine Bypass System has the following functional requirements:

a. Permit a direct bypass flow to the main condenser of 40 percent of rated turbine flow, thereby allowing a turbine step load reduction of 50 percent without a resultant reactor trip.

b. Permit turbine trip (accompanied by reactor trip) from full load without lifting steam generator safety valves.

c. Provide plant flexibility during operation, by allowing turbine load changes in excess of the base NSSS design without reactor trip.

d. Provide controlled cooldown of the NSSS.

e. Assist in achieving stable startup of the plant.

10.4.4.2 System Description

The Turbine Bypass System is shown on Figure 10.3.2-1 for the main and reheat steam.

The capability for meeting the functional requirements of subsection 10.4.4.1 has been provided by designing the equipment to the following specifications:

Number of valves - 12

Flow per valve - Unit 1 (580,000 lb/hr) Unit 2 (522,000 lb/hr)

Main Steam Pressure at Valve Inlet (for above flow) - Unit 1 - 827 psia Unit 2 - 782 psig

Maximum flow per valve at l085 lb/in^{2}g inlet pressure - 890,000 lb/hr

Time to open (full stroke) - 3 seconds

Full stroke modulation - 20 seconds

Failure position - Closed

The steam lines from the four steam generators are cross-connected immediately upstream of the turbine stop valves. Piping is run from this header to the 12 turbine bypass valves and then to the triple-shell condenser. Each of the three condenser shells will receive the discharge from four turbine bypass valves.

The normal steam dump operating mode is T_{avg} which compares the average temperature of the reactor coolant (indication of reactor power level) to the turbine impulse chamber pressure (indication of turbine load). When the reactor power level exceeds the analog of the turbine load, the turbine bypass valves will open in proportion to the mismatch.

The second mode of steam dump operation is steam pressure control. This can be either automatic or manual control (direct use of valve loading signal) and would normally be used for unit startup and shutdown.

Additional details on the Turbine Bypass System controls are provided in Section 7.7, Control Systems Not Required for Safety.

The bypass valves are built in accordance with ANSI Standard B16.5. All piping in the Steam Bypass System is in accordance with ANSI Standard B31.1.

10.4.4.3 Safety Evaluation

Low-low Reactor Coolant System average temperature will block the signals which supply air to the individual turbine bypass valves. A manual bypass (momentary) of this interlock is provided only for the three turbine bypass valves which are designated as "cooldown" valves.

An alternate method of RCS cooldown, below 350°F (i.e., delay RHR cut-in), is provided via the turbine bypass valves. The alternate method provides for disabling the P-12 interlock during cooldown after entering Mode 4. The temporary disablement can be performed procedurally with no permanent hardware modifications to the unit. Permanent control board indication of the bypassed condition is not provided nor is the bypass automatically removed when the permissive conditions are no longer met.

However, cautions per operating procedures shall be placed on the unit control board alerting Operators of the bypassed condition of the P-12 interlock. The use of all twelve turbine bypass valves is optional for the Operator. The turbine bypass valves are controlled using the Steam Pressure Controller before and after the protective interlock is disabled. The interlock disablement procedure for utilization of all twelve valves is performed only after shutdown (and subsequent cooldown) has been initiated and therefore, does not present a reactor trip hazard. An analysis has been performed to assess the cooldown potential following failure of the steam dump controller after placing all twelve turbine bypass valves in service. It was determined that the three turbine bypass “cooldown” valves spuriously opening at the protective interlock setpoint of 540°F can produce a cooldown rate that far exceeds that of all twelve turbine bypass valves opening at 350°F (temperature below which additional valve use is permitted).

Loss of the control air supply to the diaphragms of the bypass valves will prevent the valves from opening; or, if the valves were open, will trip them closed. Loss of control air can result

from indication of inadequate condenser circulating water, high condenser pressure, low-low T_{avg}, or from failure of some system component(s). In the event of loss of control air, the steam generators will still be protected during all transients by the ASME Code safety valves. Steam generator cooldown capability will be available through use of the power-operated relief valves (atmospheric dump).

Inadvertent or accidental opening of any one bypass valve during power operation will not subject the Reactor Coolant System to an uncontrolled cooldown. Refer to Chapter 15.

Failure of the Turbine Bypass System can result in discharge of steam to the atmosphere through the steam generator safety valves. If tube leaks were present prior to the incident, some radioactivity accumulated in the steam generator shell side water would be discharged through the safety valves and will be well within criteria established by 10 CFR 100.

10.4.4.4 Inspection and Testing

This equipment will be tested in accordance with the various code requirements. Periodic tests will be performed to assure that the system remains capable of its functional requirements. Inservice inspection for ASME Section XI is not required.

10.4.4.5 Instrumentation

Sufficient instrumentation has been provided to permit this system to:

a. Satisfy all its functional requirements.

b. Protect the reactor (from low-low T_{avg}).

c. Protect the turbine (from high condenser pressure).

10.4.5 Condenser Circulating Water System

This section covers the intake channel, skimmer wall, intake pumping station, forebay pool, main circulating water pumps, circulating water conduits, main condenser, discharge gates, discharge pond, cooling tower lift pumps, lift pump station, natural draft cooling towers, and discharge diffusers for the safety-related impacts of this Heat Rejection System on the plant.

The primary objective of the Condenser Circulating Water (CCW) System is to provide cooling water to the condensers of the main steam turbines. This system also provides cooling water for auxiliary equipment, and provides an efficient means of rejecting waste heat from the power generation cycle into the ambient surroundings. Because of its capacity and convenience, the condenser circulating water can also be used to dilute and disperse low-level radioactive liquid wastes.

10.4.5.1 Design Basis

a. The CCW provides each unit a nominal flow of 535,000 gal/min to the main steam turbine condensers and sufficient flow to the Raw Cooling Water System for use by auxiliary

equipment. The main steam condenser mass flows are based on a maximum temperature rise of 29.5°F for the circulating water through the condensers. This water flow is a sufficient quantity to condense the steam at an optimum main condenser back pressure and dissipate all rejected heat.

b. The CCW can dissipate a portion of the waste heat directly to the atmosphere by use of the cooling towers where required to meet thermal criteria.

c. The CCW can provide for dilution and dispersion of low-level radioactive liquid wastes. Refer to Section 11.2.6.

d. The intake pumping station houses the condenser circulating water pumps, traveling screens, and screen wash pumps.

10.4.5.2 System Description

The flow diagrams for the CCW are shown in Figures 10.4.5-1 and 10.4.5-2.

For each unit three pumps are provided in the intake pumping station to pump condenser circulating water through the condensers. Each pump has a capacity of 187,000 gal/min at a design head of 30 feet. Head losses are held to a minimum by maintaining practical velocities and smoothness of flow commensurate with prudent construction and operating costs.

The intake pumping station or intake structure is located at the land end of the intake channel. To provide cooling water to the condensers at a lower heat sink temperature, water from the river flows into the intake channel under a skimmer wall.

The six circulating water pumps mounted on the pumping station deck are the vertical nonpullout, single-stage, mixed-flow, wet-pit type. Adequate suction for these pumps is provided by the reservoir water level. Each group of three pumps operating in parallel supply the full flow requirements of one generating unit. The pumps are driven by 1750 horsepower, vertical, solid shaft, 240 r/min, weather-protected type outdoor motors.

Each pump is installed in a separate suction well with entering water strained by trash racks and a traveling screen. Each of the three pump discharges is equipped with an 84-inch diameter motor-operated butterfly valve. The discharges are brought together in a concrete transition to a single tunnel to the condensers.

The main condenser, when rejecting waste heat to the system at full-load operation, will raise the temperature of the water by approximately 29.5°F. No chemical treatment is provided for the system. Amertap condenser tube cleaning system is provided for cleaning of condenser tubes during normal operation. A vacuum priming system is provided to ensure that all passages are maintained full of water. Seven cooling tower lift pumps and two natural draft cooling towers have been installed. The seven pumps deliver approximately 980,000 gal/min at a head of 82 feet to the two cooling towers. The pumps are located in the cooling tower pumping station located at the downstream end of the discharge pond. The cooling towers are designed to reject waste heat to the atmosphere, thereby cooling the condenser circulating water when river flow/temperatures will not permit direct CCW discharge to the river.

The system is designed to operate in any of three modes: open, helper, or closed. In the open mode the water bypasses the cooling tower lift pumps and is returned to the reservoir through the diffuser pond and the discharge diffusers. In the helper mode the water is pumped into the cooling towers by the lift pumps, passes through the cooling towers where part of the waste heat is liberated directly to the atmosphere, and the cooled water is then returned to the reservoir through Gate Structure 1, the diffuser pond, and the discharge diffusers. In the closed mode the water is pumped through the cooling towers where the waste heat is liberated directly to the atmosphere and then is returned to the intake channel through Gate Structure 2 located in the return channel.

Blowdown from the towers will be taken from the return channel above Gate 1, mixed with the plant effluent, and discharged directly into the diffuser pond. The system is designed to ensure that under no conditions will the radwaste back flow into the return channel. The ERCW discharges into the return channel and will provide a continuous source of blowdown for effluent dilution.

A 1500-foot diked embankment connects to a diffuser discharge system that limits the water temperature gradient in the river and the upper temperature limit of the river. Two corrugated metal diffuser pipes extend under the dike into the river channel. One diffuser is laid to diffuse the water 350 feet across the north side and the other to diffuse the water 350 feet across the south side of the channel. A sluice gate is provided which allows one diffuser to be isolated if necessary.

Filling and operating of the CCW side of the condensers is accomplished by:

a. Venting.
b. Evacuation by the Vacuum System.
c. Operation of at least two circulating water pumps.

Three circulating water pumps can operate in parallel for each unit. However, if one pump is out of service, the two remaining pumps will deliver sufficient flow for full-load operation but with a higher turbine backpressure. A Vacuum System and a Vent System will allow passages to be maintained full of water.

Differential pressure across each traveling screen is monitored by an Air Bubbler System. When a preset differential pressure of water is reached across the screen, the screen wash pump is started. When a preset pressure is established at the screen wash nozzles, the screen motors are automatically started and the screens are washed until the pump is manually stopped.

In addition to the condenser cooling water requirements, the CCW supplies water to the plant raw cooling water pumps and raw service water pumps, which in turn supplies cooling water to nonessential systems. Raw cooling water can be supplied by gravity head from the river via the condenser intake tunnels in case of complete outage of the circulating water pumps.

10.4.5.3 Safety Evaluation

The pumping station is seismic Category I and is designed for tornado winds.

The condenser circulating water pump motors are exposed above the deck. The condenser circulating water pumps are not designed to seismic Category I requirements, but the motor mounts have been analyzed and determined to be capable of withstanding tornadic wind conditions. The intake channel design is described in subsection 2.4.8.

Flooding of the pumping station due to piping or equipment failure of the Condenser Circulating Water System will not adversely affect the performance of the safety-related equipment such as the ERCW headers inside the station.

The operator will be alerted via main control room annunciation to a rising water level in the turbine condenser pit due to a rupture of the circulating water piping inside the turbine building. The power supply to the CCW pumps are provided with diverse remote manual trip capability to allow the operator to trip the pumps upon either loss of communication between the reservoir and the pumping station forebay or rising water in the condenser pit.

The cooling towers, cooling tower supply pumping station, and pumps are not designed to seismic Category I requirements, since their failure could not adversely affect the performance of any safety-related equipment.

The discharge gate structure, discharge gates, associated machinery, power supply, and control system are no longer required to operate since the new ERCW pumping station is operational. The discharge gates have been mechanically disabled in the open position.

The ERCW pumping station is designed to provide water to the ERCW pumps from the reservoir; therefore, when the natural draft cooling towers are used in the closed mode of operation, the temperature of the water to the ERCW pumps is unaffected. The ERCW pumping station meets all of the ultimate heat sink requirements for the plant.

10.4.5.4 Tests and Inspection

No special tests are required. Routine visual inspection of the system components, instrumentation, and alarms is adequate to verify system operability.

10.4.5.5 Instrumentation Application

Sufficient instrumentation has been provided to satisfy all system functional requirements and to permit safe, convenient operation of the CCW by plant personnel.

10.4.6 Condensate Polishing Demineralizer System

10.4.6.1 Design Bases - Power Conversion

The function of the Condensate Polishing Demineralizer System (CPDS) is to remove dissolved and suspended impurities from the secondary system. The CPDS removes corrosion products which are carried over from the turbine, condenser, feedwater heaters (after startup), and piping. The removal of impurities and corrosion products in the secondary system reduces corrosion damage to the secondary system equipment. The CPDS also removes impurities which might enter the system in the makeup water, and removes radioisotopes which will be carried over the secondary cycle in the event of a primary-to-secondary steam generator tube

leak. The CPDS will also be used to remove impurities which enter the secondary system due to condenser circulating water tube leaks. The continuous steam generator blowdown flow may be processed through the CPDS in normal operation, or it may be discharged when the radioactivity level is low. The blowdown will be treated by the CPDS when radioactivity levels exceeding 10^{-1} microcuries/gm are detected in this stream.

The CPDS will polish condensate before startup and restarts. During this mode the steam generator is isolated from the feedwater. This will ensure that the feedwater quality is within limits specified by the Sequoyah Secondary Water Chemistry Program before feedwater is introduced into the steam generator.

The CPDS will have the capability of polishing the full flow of condensate up to a maximum flow of 17,000 gal/min per reactor unit. The CPDS demineralizer service vessel design temperature is 120°F (140°F maximum) and the design pressure is 300 lb/in^{2}g. The pressure drop across the CPDS demineralizer service vessels will not exceed 60 lb/in^{2}d.

10.4.6.2 System Description

The CPDS for each power generating unit consists of a battery of six mixed-bed demineralizer service vessels. Normally, each service vessel will contain a bed of mixed (cation-anion) resins. The demineralizer service vessels may be operated with other resin(s), or may be used empty. The demineralizer service vessels are placed in service as needed. The system also includes an external regeneration facility, shared between the demineralizer service vessels of the two generating units. The basic regeneration system consists of a resin separation/cation regeneration tank, anion regeneration tank, and resin storage tank. The concentrated chemicals used in regeneration are supplied from the acid and caustic storage tanks. Additional equipment is provided in the regeneration system to promote efficiency in the process. A hot water tank supplies hot dilution water at the caustic mixing tee.

High conductivity chemical injection waste and rinse water are collected in the neutralization tank. The tank is provided with the capability to adjust pH to within effluent limits. The inventory of this tank is sampled and the pH adjusted as required prior to being discharged through the cooling tower blowdown. The inventory of this tank may be discharged to the radwaste system for further processing if required (see Chapter 11).

The backwash, final rinse, and resin sluicing water are collected in either of the two high crud tanks. Both tanks are provided with the capability to adjust pH to within effluent limits. The effluents of these tanks is typically routed through a filter unit to remove suspended solids and resins collected during the cleaning/separation step of the regeneration cycle. The design of the waste treatment portion of the condensate demineralizer system includes a high crud filter (HCF) unit. However, the HCF is typically bypassed in favor of a bag filter unit. The HCF is relatively complicated and costly to operate and generates liquid waste in addition to the solid waste produced by the filtering process. In contrast, the bag filters are inexpensive, easy to operate, and generate only solid waste. In addition, the filter sizes in the bag filter units can be easily varied offering an operational flexibility not available with the HCF. The bag filter unit assembly is in series with the High Crud Filter (HCF) and is installed upstream of the HCF. The bag filter assembly itself consists of three individual bag filter vessels in parallel. During normal operating

mode, two bag filters will be in service. The third filter, which is on standby and isolated, may be placed on line while changing out the clogged filters, one at a time, obviating the need to secure flow through the system. The bag filters and/or the HCF are used to meet the National Pollutant Discharge Elimination System (NPDES) permit release requirements. The inventory of these tanks is discharged to the diffuser pond. The inventory of these tanks may be discharged to the radwaste system for further processing as required (see Chapter 11).

The CPDS demineralizer service vessels and all regeneration equipment are located within the condensate demineralizer building. Each set of six demineralizer service vessels is arranged in one shielded compartment and dedicated to a plant unit. All regeneration vessels and reclaim tanks are arranged in individual compartments. The caustic storage tank and hot water tank are also in the condensate demineralizer building. The acid tank is located in a weather-protected housing near the Condensate Demineralizer Building.

The tanks in the CPDS are all rubber-lined to prevent corrosion except the hot water tank (Keysite lined) and the acid storage tank (unlined). All tanks are closed . All closed tanks in the CPDS are designed and fabricated in accordance with the ASME Code for Unfired Pressure Vessels Section VIII, 1974 edition.

The CPDS is not a safety-related system and is not required for the orderly shutdown of the reactor. The condensate demineralizer building housing the CPDS equipment is a nonseismic structure and all piping, piping hangers, and equipment in this system are nonseismic. The system piping is in accordance with American National Standard Institute B31.1.

The CPDS demineralizer service vessels for each unit are arranged in parallel and are supplied by the condenser hotwell pumps via the inlet header. An outlet header collects the effluent from the demineralizer service vessels and supplies suction flow to either the condensate booster pumps or demineralized condensate pumps (see subsection 10.4.7.1). The bypass valve is located across the influent and effluent headers in parallel with the demineralizer service vessels. Outlet piping from each service vessel is equipped with a resin trap.

The CPDS demineralizer service vessels operate in one of three modes as determined by the position of the bypass valve and the service vessel inlet and outlet valves.

- Full flow polishing (bypass valve closed), is normally used during startup and will be used if required to meet the Sequoyah Water Chemistry Program.

- Throttle bypass (bypass valve partially open), will be the operating mode when the pressure differential across the demineralizer service vessel exceeds the setpoint.

- Full bypass (bypass valve fully open), is normally used during initial system startup and will be used if required to meet the Sequoyah water chemistry program. It will also be the operating mode in the event the CPDS experiences loss of control air and/or electrical failure.

Override is provided for manually positioning the automatic bypass valve in the "open," "close," or "throttle" positions. Automatic throttle bypass protects the demineralizer service vessels from excessive pressure drop. The manual bypass valve may be placed in the throttle bypass position when the influent condensate water quality meets the limits specified by the Sequoyah Water Chemistry Program. The manual bypass valve may be placed in the full bypass position (and the demineralizer service vessel inlet valves closed) when the inlet condensate temperature exceeds 130°F in order to protect the functional characteristics of the ion exchange resins. Continued operation is dependent upon influent water condensate quality.

10.4.6.3 Safety Evaluation

Radionuclides are released to the secondary system when there is a steam generator tube leak. The radionuclides have essentially no effect on the resin ion exchange capacity. Although the radionuclide concentrations have no effect on resin capacity, potential activity levels in the demineralizer service vessels and associated regeneration equipment make it necessary to shield the CPDS equipment.

Gaseous waste is removed from the CPDS area by inducing a negative pressure on the demineralizer service vessel cells, valve galleries, and regeneration equipment cells. The unmonitored exhaust is released to the atmosphere (see Section 9.4.6). Liquid releases are continually monitored for radioactivity (See Chapter 11). Liquid radwaste is processed by the Waste Disposal System (refer to Chapter 11).

10.4.6.4 Tests and Inspections

The CPDS is designed so that all demineralizer service vessels, regeneration equipment, and most valves can be individually isolated from the system if testing or inspection is required, with no curtailment or interruption of power generation. Isolation valves on inlet and outlet or demineralizer service vessels and system bypass valves can be tested and inspected during shutdown if required.

10.4.6.5 Instrumentation

Instrumentation and controls are provided to perform the following functions:

1. Measure, indicate, and record condensate conductivity in the influent header and the effluent line of each demineralizer service vessel.

   High specific conductivity downstream of a particular demineralizer service vessel indicates resin exhaustion, and high influent cation conductivity indicates condenser tube leakage.

   High specific conductivity downstream of particular demineralized service vessels and high cation conductivity of the influent header are annunciated at the local control panel.

2. Measure pressure differential between influent and effluent headers, and throttle the valve bypassing the demineralizer service vessels on high differential signal when the bypass valve is closed.

3. Provide local annunciation when the bypass valve is throttled on a high differential pressure signal.

4. Measure and indicate condensate temperature at the influent header. High influent condensate temperature (130°F) is alarmed locally.

5. Measure, record, and indicate flow rates through individual demineralizer service vessels. Flow rates through each demineralizer service vessel indicates extent of crud loading.

6. Annunciate locally high pressure differential across each resin trap.

7. Measure, indicate, and record the sodium content in either the influent condensate header, the effluent condensate header or any 1 of 6 polisher outlet headers. High sodium content is annunciated locally.

10.4.7 Condensate - Feedwater System

10.4.7.1 Condensate - Main Feedwater System

10.4.7.1.1 Design Bases

The Condensate-Feedwater System is designed to supply a sufficient quantity of feedwater to the steam generator secondary side inlet during all normal operating conditions and to guarantee that feedwater will not be delivered to the steam generators when feedwater isolation is required. A complete discussion of feedwater isolation is included in Chapter 15.

The condensate and feedwater system pumps take suction from the main condenser hotwells and deliver water to the steam generators at an elevated temperature and pressure. These systems are capable of delivering water to the steam generators at the rated thermal power as depicted in Figures 10.1-2 and 10.1-3.

10.4.7.1.2 System Description

The flow diagrams for the Condensate-Feedwater System are presented in Figures 10.4.2-1, 10.4.7-1, and 10.4.7-2. Important design parameters are provided in Table 10.1-1.

The ability to meet the design requirements of Subsection 10.4.7.1.1 is provided by the following equipment (per unit):

(a) Hotwell Pumps

(b) Demineralized Condensate Pumps

(c) Condensate Booster Pumps

(d) Main Feedwater Pumps

(e) Main Feedwater Pump Turbine

(f) Main Feedwater Pump Turbine Condenser

Number - 2
Manufacturer - Westinghouse Electric Corporation
304 Stainless Steel
Channel Design Pressure* - 350 lb/in^{2}g
Channel Design Temperature* - 300°F

(g) Gland Steam Condenser

Number - 1
Manufacturer - Westinghouse Electric Corporation
Tube Material - 316 Stainless Steel
Channel Design Pressure* - 400 lb/in^{2}g
Channel Design Temperature* - 125°F

(h) Feedwater Heaters

Heater No.	Channel Design Pressure*	Channel Design Temperature*
1	1350 lb/in^{2}g	460°F
2	725 lb/in^{2}g	422°F
3	725 lb/in^{2}g	380°F
4	725 lb/in^{2}g	300°F
5	350 lb/in^{2}g	298°F
6	350 lb/in^{2}g	298°F
7	350 lb/in^{2}g	298°F

*Channel side design conditions only tabulated here. For shell side design conditions, see subsection 10.4.9, Heater Drains and Vents.

Feedwater heaters are designed in accordance with HEI standards for closed feedwater heaters and the ASME Boiler and Pressure Vessel Code, Section VIII. All piping and valves from the condenser hotwell to the feedwater isolation valve is designed in accordance with ANSI B31.1, 1967, while the remainder of the Feedwater System is designed in accordance with ANSI B31.1 and inspected and tested in accordance with B31.7.

The system boundaries extend from the condenser hotwell to the inlet of the steam generator.

Condensate is taken from the main condenser hotwells by three vertical, centrifugal, motor-driven hotwell pumps. By approximately 70 percent unit guaranteed load on the main feedwater pump, the three horizontal, centrifugal, motor-driven condensate booster pumps are all in service. By approximately 80 percent feedwater flow, all three demineralized condensate pumps have been placed in service. These pumps, when operating in series with the hotwell pumps, are capable of delivering required flow with sufficient NPSH to the main feedwater pumps under all normal operating conditions.

For Unit 1 only, the two turbine driven, variable speed main feedwater pumps are capable of delivering feedwater to the four steam generators under all expected operating conditions. Main feedwater pump speed is automatically adjusted to meet system demands. The main feedwater pump speed control system consists of three interrelated parts:

a. The setpoint calculators which sum the four steam flows, provide the lag on setpoint changes, and contain the basic scaling adjustments.

b. The differential pressure controller which compares the steam header pressure, feedwater header pressure, and calculated setpoint to determine the speed signal required.

c. The main feedwater pump manual/auto stations provide the operator with the flexibility of choosing various operating modes. The unit operator will have the option to operate (1) both pumps on manual speed control to base load his operation, (2) to operate one pump on manual with the other automatically swinging with plant load changes, or (3) to let both pumps swing with the load changes.

For Unit 2 only, the two turbine driven, variable speed main feedwater pumps are capable of delivering feedwater to the four steam generators under all expected operating conditions. Main feedwater pump speed is automatically adjusted to meet system demands. The main feedwater pump speed control system maintains a differential pressure determined by the average steam flow from all four steam generators. This setpoint is compared to the actual differential pressure between the main steam header and the main feed pump discharge header. Any difference between the steam flow derived setpoint and the actual setpoint changes pump speed accordingly.

The main feedwater pump manual/auto stations provide the operator with the flexibility of choosing various operating modes. The unit operator will have the option to operate (1) both pumps on manual speed control to base load his operation, (2) to operate one pump on manual with the other automatically swinging with plant load changes, or (3) to let both pumps swing with the load changes.

Feedwater flow to the individual steam generators is controlled automatically above 15 percent load by adjustment of a feedwater regulator valve in the piping to each steam generator. The valve's position is determined by a three element controller that uses steam generator water level, steam flow, and feedwater flow as the control variables. The regulator valves are pneumatically operated and are designed to fail closed on loss of air. During startup and operation below 15 percent load, additional control is available from small bypass valves around the feedwater regulator valves. For Unit 1 only, the bypass valve's position is determined by a single element controller using steam generator water level as the control variable.

Unit 2 only, the bypass valve’s position is determined using steam generator narrow range and wide range levels along with FW temperature, turbine load, and operator entered level setpoint. Prior to the generator sync, the steam generator level with operator entered level setpoint develops a single element control signal that can be modified by a variable gain unit that adjusts the control signal output based upon feedwater temperature to compensate for feedwater mass density. After the generator is placed online, the turbine impulse pressure developed setpoint replaces the operator entered setpoint. The control signal can also be modified based upon the wide range steam generator level. The bypass valve control is designed to reduce the affects of steam generator level shrink and swell as low power. The bypass valve control is placed into automatic at about 2% power and as the plant

escalates in power, the bypass valve continues to open and control level until about 16-18% power. The bypass valve can transfer to three element control at about 13-14% power. (Three element control uses steam generator level, feedwater flow, and steam flow to control the regulating valve.) At about 15-18% power, the Distributed Control System begins to open the main feedwater regulating valve and begins the process of transferring control from the bypass valve to the main regulating valve.

The feedwater system normally operates at full load with three hotwell, three demineralized condensate, three condensate booster, and two main feedwater pumps in service.

Heating of the condensate-feedwater is accomplished by passing it through a series of closed heat exchangers as described below:

a. Gland Steam Condenser - This exchanger condenses the steam leakoff from all turbine shaft seals and removes the noncondensables (the result of shaft inleakage of air) from this steam. A weighted check valve is provided in a bypass around the condenser to ensure minimum required flow through the condenser at low condensate flow conditions and to minimize pressure drop through the condenser during high condensate flow conditions.

b. Main Feedwater Pump Turbine Condensers - Each main feedwater pump turbine is equipped with an individual surface type condenser. Control valves in the inlet and outlet condensate piping to these condensers provide the ability to isolate a condenser if its associated turbine is rendered inoperative and to force 100 percent condensate flow through the operating condenser, thus allowing maximum power operation of the remaining turbine. In order to ensure the availability of a condensate flow path following a trip of both main feedwater pumps, only one of the two condensers can be automatically isolated at any given time. The hotwell pumps will automatically trip if this flow path is not available.

c. Feedwater Heaters - Three parallel strings of heaters, each consisting of three low pressure feedwater heaters, three intermediate pressure feedwater heaters, and one high pressure feedwater heater are provided.

   The heaters are numbered from 1 to 7 with the highest pressure heater designated as No. 1. Motor-operated isolation valves are provided at the inlet to each No. 7 heater and the outlet of each No. 5 heater, the inlet to each No. 4 heater and the outlet of each No. 2 heater, and at the inlet and outlet of each No. 1 heater. High-high level in an applicable heater shell will cause the isolation of the group of heaters in the string in which the high-high level occurred (either the 5, 6, 7, heaters, 2, 3, and 4 heaters, or No. 1 heater in either the A, B, or C string).

Tubes for all heaters are 304 Stainless Steel (SS) except for heaters 5, 6, and 7. The tubes for heaters 5, 6, and 7 are SA-688-304 SS. Tube-to-tube sheet joints in the No. 1 and No. 2 heaters are expanded and welded; tube-to-tube sheet joints are only expanded in the No. 3 through No. 7 heaters.

Minimum flow bypasses are provided for equipment protection. The Condensate System minimum flow bypass is located immediately upstream of the No. 7 heaters. The bypass control valve receives its operating signal from the station flow nozzle located upstream of the gland steam condenser. The valve plug's position is modulated to maintain approximately 5500 gal/min flow through the flow nozzle. This flow is sufficient to protect the hotwell and demineralized condensate pumps and to provide adequate cooling water to the gland steam condenser at all times.

The condensate booster pumps are protected by automatic recirculation control valves. The checking elements of these valves are calibrated to actuate pilot valves which, in turn, open or close the recirculation valves to maintain a minimum flow of approximately 1500 gal/min through each pump.

The Feedwater System has a minimum flow bypass line located downstream of each main feed pump to permit direct recirculation back to the condensers. The minimum flow bypass valve can be modulated automatically in a manner similar to the condensate minimum flow valve or manually to maintain a minimum flow of approximately 3500 gal/min through each operating main feed pump. Operation of the minimum flow bypass valves in automatic is no longer required for pump protection, since the main feed pumps receive redundant trip signals (Train A and B) on main feedwater isolation (i.e., the only time at which the downstream flow path is isolated while the main feed pumps are operating).

Piping is provided around the main feedwater pumps to allow filling the steam generators without operating the main feedwater pumps.

Additional components of the condensate and feedwater systems include an injection water system to provide sealing water to all system pumps, condensate storage tanks which provide capability of controlling feedwater inventory by regulating condenser hotwell level and which provide storage of the water required for operation of the Auxiliary Feedwater System, and facilities for injection of chemicals for oxygen scavenging and feedwater pH control. Complete isolation of feedwater to all steam generators results only from any one of the following Feedwater Isolation (FWI) signals from the Reactor Protection System:

1. High-high steam generator level
2. Safety injection signal
3. Reactor trip along with a low T-average

10.4.7.1.3 Safety Evaluation

The Feedwater System from the steam generator back through the motor operated isolation valve and check valve is a safety system and is designed to TVA class B. This portion of the Feedwater System can be considered an integral part of the Auxiliary Feedwater System.

Feedwater flow to the steam generators is normally interrupted within 9.0 seconds of initiation of a FWI signal. This isolation, accompanied by a reactor trip, is accomplished by closure of redundant valves in the piping to each steam generator and tripping of the main feedwater pumps. The feedwater regulator valves will close in a nominal 7.0 seconds. The FW isolation response time, which includes FW regulator valves closure time and all electronic delays will be less than nine seconds. The signal to initiate closure of these valves is available from both power train A and power train B. The ASME class 2 motor operated containment feedwater isolation valves will close within 7.5 seconds (13 seconds when including load tap changer response time). The isolation valves associated with steam generators 1 and 3 are connected to power train A while those associated with steam generators 2 and 4 are connected to power train B. (Closure of the startup valves bypassing the feedwater regulator valves is guaranteed within nine seconds. Each bypass valve can be closed by a train B signal for steam generators 1 and 3 or train A signal for steam generators 2 and 4.) Each main feedwater pump can be tripped from either a train A or train B signal. If power is not available, condensate booster, demineralized condensate, hotwell, and heater drain tank pumps will deliver no feedwater to the steam generators. Closure of the feedwater regulator and the feedwater isolation

valves and main feedwater pump trip (along with the pump trips during the blackout condition) satisfies feedwater isolation requirements.

The Unit Main Turbine Generator will receive a signal to run the unit back to 77% (Unit 2) and 76.6% (Unit 1) load if: (a) either No. 3 Heater Drain Tank bypass valve is open, (b) the main turbine generator is loaded to greater than 82% (Unit 2) and 81.6% (Unit 1), and (c) after receiving a delayed indication of less than 5500 gpm from the discharge header of the No. 3 Heater Drain Tank Pumps.

A main feed pump trip is annunciated in the Main Control Room, thereby alerting the operator of the potential need for a turbine runback.

When the unit is operating with both main feed pumps in service above approximately 77 percent (Unit 2) and 76.6 percent (Unit 1) guaranteed load and a loss of one main feed pump occurs, the following actions are automatically initiated:

1. Starting of all auxiliary feedwater pumps.

2. Isolation of the main feed pump turbine condenser associated with the tripped pump. Thus 100 percent condensate flow is passed through the active main feed pump turbine condenser allowing maximum power operation of the active feed pump turbine.

3. Acceleration of the active drive turbine to its maximum speed.

4. Turbine runback.

The above actions assist in maintaining steam generator secondary water inventory and decrease the potential for a reactor trip. Should steam generator secondary water inventory not be maintained, a reactor trip will either be manually initiated on decreasing steam generator water level or automatically initiated on low-low steam generator water level.

Insufficient NPSH at the main feed pump suction can result in a decrease in steam generator level. Low NPSH at the main feed pump suction is annunciated in the main control room, thereby alerting the unit operator of the need for a load runback to avoid a reactor coolant system transient.

10.4.7.1.4 Inspection and Testing

The operating characteristics for each system pump have been established throughout the operating range by factory tests. Each hotwell and condensate booster pump casing has been tested hydrostatically to 150 percent of its shutoff head plus maximum suction pressure. All parts of each turbine driven main feed pump subject to hydraulic pressure in service have been hydrostatically tested to not less than 150 percent of the maximum pressure to which these parts are subjected when the pump is operating at rated speed and zero flow, with maximum suction pressure from the hotwell and condensate booster pumps.

All parts and assemblies of parts of the feedwater heaters have been hydrostatically tested and tested otherwise as required by applicable sections of the Heat Exchange Institute Standards for Closed Feedwater Heaters; Standards of Feedwater Heater Manufacturers Association, Incorporated; and Section VIII, Unfired Pressure Vessels of the ASME Boiler Code. Heater tubes have been tested as required by ASTM B111, latest edition, except parts 10.1 and 10.2.1 were applicable.

Hydrostatic and other testing of the parts and assemblies of parts of the main feed pump turbine condensers channels and tubes were in accordance with applicable sections of the Heat

Exchange Institute Standards for Closed Feedwater Heaters and Section VIII, Unfired Pressure Vessels, of the ASME Boiler Code.

Manways or removable heads are provided on all heat exchangers to provide access to the tube sheet for inspection, repair, or tube plugging.

A general routine visual surveillance of the system components and piping during operation and maintenance periods for signs of leakage and distress shall be performed to verify system integrity.

The Class B portions of the Feedwater System are designed to comply with the 1974 edition of ASME Section XI, Inservice Inspection of Nuclear Power Plant Components, to the extent practical under the original design. Inservice inspection will be in accordance with the Inservice Inspection program and procedures (section 5.2.8). Inservice testing of Code Class 2 valves will be performed in accordance with ASME Section XI (see Section 6.8).

10.4.7.1.5 Instrumentation

Sufficient level controllers, flow controllers, level switches, limit switches, temperature switches, etc., will be provided to permit personnel to conveniently and safely operate the Condensate-Feedwater System.

10.4.7.2 Auxiliary Feedwater System

10.4.7.2.1 Design Bases

The Auxiliary Feedwater (AFW) System supplies, in the event of a loss of the main feedwater supply, sufficient feedwater to the steam generators to remove primary system stored and residual core energy. It may also be required in some other circumstances such as the evacuation of the main control room, cooldown after a loss-of-coolant accident for a small break, maintaining a water head in the steam generators following a loss-of-coolant accident, or a flood above plant grade.

The system is designed to start automatically in the event of a loss of offsite electrical power, a safety injection signal, low-low SG water level, a trip of one or both main feedwater pumps, any of which will result in, may be coincident with, or may be caused by a reactor trip, or an AMSAC Initiation. Specific details are listed in 10.4.7.2.2. It will supply sufficient feedwater to prevent the relief of primary coolant through the pressurizer safety valves and the uncovering of the core. It has adequate capacity to maintain the reactor at hot standby and then cool the Reactor Coolant (RC) System to the temperature at which the Residual Heat Removal (RHR) System may be placed in operation, but it cannot supply sufficient feedwater for power generation.

Engineered Safety Feature (ESF) standards are met for the AFW System except for the condensate water supply, which is backed up by the Essential Raw Cooling Water (ERCW) System. The ESF grade portion of the system is designed for seismic conditions and single failure requirements, including consideration that the rupture of a feedwater line could be the initiating event. It will provide the required flow to two or more steam generators regardless of any single active or passive failure in the long term.

The AFW System serves as a backup system for supplying feedwater to the secondary side of the steam generators at times when the feedwater system is not available, thereby maintaining the heat sink capabilities of the steam generator. As an Engineered Safeguards System, the AFW System is directly relied upon to prevent core damage and system overpressurization in the event of transients such as a loss of normal feedwater or a secondary system pipe rupture, and to provide a means for plant cooldown following any plant transient. An auxiliary feedwater pump start shall close the SGB isolation valve and SGB sampling isolation valve. The SGBD isolation valves outside containment do not go closed if the AFWP(s) are in operation and receive an auto-start signal for design basis accident mitigation. See Reference 5 for the acceptability of SGBD in service with AFW in service.

Following a reactor trip, decay heat is dissipated by evaporating water in the steam generators and venting the generated steam either to the condensers through the steam dumps or to the atmosphere through the steam generator safety valves or the power-operated relief valves. Steam generator water inventory must be maintained at a level sufficient to ensure adequate heat transfer and continuation of the decay heat removal process. The water level is maintained under these circumstances by the AFW System which delivers an emergency water supply to the steam generators. The AFW System must be capable of functioning for extended periods, allowing time either to restore normal feedwater flow or to proceed with an orderly cooldown of the plant to the reactor coolant temperature where the RHR System can assume the burden of decay heat removal. The AFW System flow and the emergency water supply capacity must be sufficient to remove core decay heat, reactor coolant pump heat, and sensible heat during the plant cooldown. The AFW System can also be used to maintain the steam generator water levels above the tubes following a LOCA. In the latter function, the water head in the steam generators serves as a barrier to prevent leakage of fission products from the Reactor Coolant (RC) System into the secondary plant.

The reactor plant conditions which impose safety-related performance requirements on the design of the AFW System are as follows for the Sequoyah plant:

a. Loss of Main Feedwater Transient
   - Loss of main feedwater with offsite power available
   - Loss of Offsite Power (i.e., loss of main feedwater without offsite power available)

b. Secondary System Pipe Ruptures
   - Feedline rupture
   - Steamline rupture

c. Loss of all Alternating Current Power (only for diverse power source consideration)

d. Loss-of-Coolant Accident (LOCA)

e. Cooldown

<u>Loss of Main Feedwater Transients</u>

The design loss of main feedwater transients are those caused by:

a. Interruptions of the Main Feedwater System flow due to a malfunction in the feedwater or condensate system

b. Loss of offsite power (LOOP) with the consequential shutdown of the system pumps, auxiliaries, and controls

Loss of main feedwater transients are characterized by a rapid reduction in steam generator water levels which results in a reactor trip, a turbine trip, and auxiliary feedwater actuation by the protection system logic. Following reactor trip from high power, the power quickly falls to decay heat levels. The water levels continue to decrease, progressively uncovering the steam generator tubes as decay heat is transferred and discharged in the form of steam either through the steam dump valves to the condenser or through the steam generator safety or power-operated relief valves to the atmosphere. The reactor coolant temperature increases as the residual heat in excess of that dissipated through the steam generators is absorbed. With increased temperature, the volume of reactor coolant expands and begins filling the pressurizer. Without the addition of sufficient auxiliary feedwater, further expansion will result in water being discharged through the pressurizer safety and relief valves. If the temperature rise and the resulting volumetric expansion of the primary coolant are permitted to continue, then (1) pressurizer safety valve capacities may be exceeded causing overpressurization of the RC System and/or (2) the continuing loss of fluid from the primary coolant system may result in bulk boiling in the RC System and eventually in core uncovering, loss of natural circulation, and core damage. If such a situation were ever to occur, the Emergency Core Cooling (ECC) System would be ineffectual because the primary coolant system pressure exceeds the shutoff head of the safety injection pumps, the nitrogen overpressure in the accumulator tanks, and the design pressure of the RHR Loop. Hence, the timely introduction of sufficient auxiliary feedwater is necessary to arrest the decrease in the steam generator water levels, to reverse the rise in reactor coolant temperature, to prevent the pressurizer from filling to a water solid condition, and eventually to establish stable hot standby conditions. Subsequently, a decision may be made to proceed with plant cooldown if the problem cannot be satisfactorily corrected.

The LOOP transient differs from a simple loss of main feedwater in that emergency power sources must be relied upon to operate vital equipment. The loss of power to the electric-driven condenser circulating water pumps results in a loss of condenser vacuum and condenser dump valves. Hence, steam formed by decay heat is relieved through the steam generator safety valves or the power-operated relief valves. The calculated transient is similar for both the loss of main feedwater and the LOOP, except that reactor coolant pump heat input is not a consideration in the LOOP transient following loss of power to the reactor coolant pumps.

Secondary System Pipe Ruptures

The feedwater line rupture accident not only results in the loss of feedwater flow to the steam generators but also results in the complete blowdown of one steam generator within a short time if the rupture should occur downstream of the last nonreturn valve in the main or auxiliary feedwater piping to an individual steam generator. Another significant result of a feedline rupture may be the spilling of auxiliary feedwater out of the break as a consequence of the fact that the auxiliary feedwater branch line may be connected to the main feedwater line in the region of the postulated break. Such situations can result in the spilling of a disproportionately large fraction of the total auxiliary feedwater flow because the system preferentially pumps water to the lowest pressure region in the faulted loop rather than to the effective steam generators which are at relatively high pressure. The system design must allow for terminating, limiting, or minimizing that fraction of auxiliary feedwater flow which is delivered to a faulted loop or spilled through a break in order to ensure that sufficient flow will be delivered to the

remaining effective steam generator(s). The concerns are similar for the main feedwater line rupture as those explained for the loss of main feedwater transients.

Main steamline rupture accident conditions are characterized initially by plant cooldown and, for breaks inside containment, by increasing containment pressure and temperature. Auxiliary feedwater is not needed during the early phase of the transient and flow to the faulted loop will contribute to an excessive release of mass and energy to containment.

Thus, steamline rupture conditions establish the upper limit on auxiliary feedwater flow delivered to a faulted loop. Eventually, however, the RC System will heat up again and auxiliary feedwater flow will be required to be delivered to the unfaulted loop, but at somewhat lower rates than for the loss of feedwater transients described previously. Provisions must be made in the design of the AFW System to limit, control, or terminate the auxiliary feedwater flow to the faulted loop as necessary in order to prevent containment overpressurization following a steamline break inside containment and to ensure the minimum flow to the remaining unfaulted loops.

Loss of All Alternating Current Power (Station Blackout [SBO])

The loss of all alternating current power is postulated as resulting from accident conditions wherein not only onsite and offsite alternating current power is lost but also alternating current emergency power is lost as an assumed common mode failure. Battery power for operation of protection circuits is assumed available. This transient is not evaluated relative to typical criteria listed in Table 10.4.7-1 since multiple failures of safety-grade components or equipment must be assumed; but is considered as a basis for establishing the requirements for providing both an auxiliary feedwater pump power and control source which are not dependent on alternating current power and which are capable of maintaining the plant at hot shutdown until alternating current power is restored.

During a SBO, main feedwater flow to the SGs is terminated as a result of the main feedwater pumps tripping and feedwater regulating valves closing (loss of AC power). The transient is identical to a "Loss of Main Feedwater Transient with LOOP" in which one motor-driven auxiliary feedwater pump (MDAFWP) is needed to provide sufficient cooling water flow to two SGs. The turbine-driven auxiliary feedwater pump (TDAFWP) has a greater flow capacity than one MDAFWP and is capable of supplying all four SGs. The AFW system is actuated on a SBO and the TDAFWP is relied upon to provide sufficient cooling/SG level during the four hours SBO. The SG level can be maintained by controlling TDAFWP speed and by closing the TDAFWP LCVs (if required) using available air from accumulator tank and high pressure air cylinder. On loss of air, the TDAFWP LCVs will fail open.

Loss-of-Coolant Accident (LOCA)

The large break loss-of-coolant accident does not impose AFW System flow requirements above those required by the other accidents addressed in this section.

Small break LOCA's are characterized by relatively slow rates of decrease in RC System pressure and liquid volume. The principal contribution from the AFW System following such small break LOCA's is basically the same as the system's function during hot shutdown or following spurious safety injection signal which trips the reactor. Maintaining a water level inventory in

the secondary side of the steam generators provides a heat sink for removing decay heat and establishes the capability for providing a buoyancy head for natural circulation. The AFW System is utilized to assist in a system cooldown and depressurization following a small break LOCA while bringing the reactor to a cold shutdown condition.

Cooldown

The cooldown function performed by the AFW System is a partial one since the RC System is reduced from normal zero load temperatures to a hot leg temperature of approximately 350°F. The latter is the maximum temperature recommended for placing the RHR System into service. The RHR System completes the cooldown to cold shutdown conditions.

Cooldown may be required following expected transients, following an accident such as a main feedwater line break, loss-of-load/turbine trip, loss of normal feedwater, loss of off-site power, small break LOCA, steam generator tube rupture, or it may be a normal cooldown prior to refueling or performing reactor plant maintenance. If the reactor is tripped following extended operation at rated power level, the AFW System is capable of delivering sufficient auxiliary feedwater to remove decay heat and Reactor Coolant (RC) Pump heat following reactor trip while maintaining the steam generator water level. Following transients or accidents, the recommended cooldown rate is consistent with expected needs and at the same time does not impose additional requirements on the capacities of the auxiliary feedwater pumps, considering a single failure. In any event, the process consists of being able to dissipate plant sensible heat in addition to the decay heat produced by the reactor core.

The primary function of the AFW System is to provide sufficient heat removal capability for heatup accidents following reactor trip to remove the decay heat generated by the core and prevent RC System overpressurization. Other plant protection systems are designed to meet short-term or pretrip fuel failure criteria. The effects of excessive coolant shrinkage are evaluated by the analysis of the rupture of a main steam pipe transient. The maximum flow requirements determined by other bases are incorporated into this analysis, resulting in no additional flow requirements.

Table 10.4.7-1 summarizes the criteria which are the general design bases for each event discussed above. Specific assumptions used in the analyses to verify that the design bases are met are discussed in subsection 10.4.7.2.3.

10.4.7.2.2 System Description

System Design

Except for the common miniflow line to and supply line from the condensate tanks and some shared support facilities such as the condensate storage tanks and parts of the Control System, the two reactor units have separate AFW Systems, as shown in Figure 10.4.7-5. As on all other engineered safeguards, the independence of the two systems will be guaranteed in accordance with General Design Criterion 5. The nonessential condensate supply is isolated from the essential portion of the AFW System by check valves as shown on Figure 10.4.7-5.

The safety-related portion of the Auxiliary Feedwater System is housed in the Auxiliary and Reactor Buildings and steam valve rooms. These structures are designed to withstand the

effects of natural phenomena such as earthquakes and tornadoes as discussed in Chapter 3. Protection of the system from internal and external missiles is addressed in Section 3.5. The description of the supply of feedwater to the steam generators during flood conditions is presented in Appendix 2.4A.

Each system has two 440 gal/min electric motor-driven pumps and one 880 gal/min turbine-driven pump. Each of the electric pumps serves two steam generators; the turbine pump serves all four. All three pumps automatically deliver the minimum safeguards flow upon loss of offsite power, loss of both main feedwater pumps, or a safety injection signal. The electric pumps also start on a two-out-of-three low-low-level signal in any steam generator; and the turbine pump starts on a two-out-of-three low-low level signal in any two steam generators. All three pumps also start automatically upon initiation of Anticipated Transient Without Scram (ATWS) Mitigation System Actuation Circuitry (AMSAC). Refer to Subsection 7.7.1.12 for system description. All three pumps also start on a main feedwater pump trip with plant load greater than 77 percent (Unit 2) and 76.6 percent (Unit 1) in order to lessen the feedwater system transient. Each electric pump supplies sufficient water for evaporative heat removal to prevent operation of the primary system relief valves, or the uncovering of the core. Pump runout protection is provided for all pumps. Each electric motor-driven pump is equipped with a cavitating venturi, which has a small throat area designed to limit flow by choking. The venturi pressure recovery cone allows the pressure loss across the venturi to be minimized. Electric motor-driven pump runout is designed to be limited to 650 gpm to the steam generators, which is less than that which would result in pump cavitation. The turbine-driven pump utilizes the turbine speed control which uses a flow signal to control the flow to the steam generators to 880 gal/min.

The preferred sources of water for all auxiliary feedwater pumps are the two non-seismic condensate storage tanks. A minimum usable level of 240,000 gallons is required per the technical specifications for an operable tank and is reserved for the AFW System by means of an administrative limit based upon indicated level. As an unlimited backup (seismic Category I) water supply, a separate trained ERCW System header feeds each electric pump. The turbine pump can receive backup (seismic Category I) water from either train A or B ERCW header. The ERCW supply can be remote-manually aligned based on CST level or automatically on a two-out-of-three low-pressure signal in the AFW suction line. Consequently, even assuming the worst single active failure, auxiliary feedwater can be supplied indefinitely from the ERCW System. However, since the ERCW System supplies poor quality water, it is not used except in emergencies when the condensate supply is unavailable. The ERCW System is described in subsection 9.2.2. In addition, the Fire Protection (FP) System may be connected downstream of each electric pump by a spool piece to supply unlimited raw water directly to the steam generators in the unlikely event of a flood above plant grade as discussed in Appendix 2.4A.

The AFW System is designed to deliver 40°F to 120°F CST water for pressures ranging from the RHR System cut-in point (equivalent to 110 lb/in^{2}g in the steam generator) to the steam generator safety valve set pressure. System piping is designed for pressures up to approximately 1650 lb/in^{2}g where necessary. Criteria for the AFW System design basis conditions are shown in Table 10.4.7-1. Significant pump design parameters are given in Table 10.4.7-2. Pump characteristics and power requirement curves are given in Figures 10.4.7.-6 and 10.4.7-7.
.

Separate 1E power subsystems and fully qualified control air subsystems serve each electric-driven AFW pump and its associated valves. The valves associated with the turbine-driven pump are served by both 1E electric and fully qualified control air subsystems, with appropriate measures precluding any interaction between the two subsystems. The turbine-driven pump receives control power from a third direct current electric channel that is distinct from the channels serving the electric pumps and is not dependent on alternating current power for a period of 4 hours during SBO. The essential components of the AFW System and subsystems necessary for safe shutdown can function as required in the event of a loss of offsite power.

Steam-water slugging (waterhammer) in the feedwater lines of the Sequoyah Nuclear Plant is not expected to occur. One of the prerequisites for waterhammer of this nature is for steam generator level to fall below the feedring and for steam to enter the feedring and feedwater line. Design modifications to the feedring on each steam generator as described below effectively minimize the extent to which steam can accumulate in the feedwater line therefore reducing the likelihood of waterhammer and its magnitude should it occur.

The Sequoyah Nuclear Plant Unit 2 currently utilizes Westinghouse Model 51 Steam Generators which contained a feedring design with bottom flow holes for distribution of feedwater to the steam generator. This particular design has been susceptible to the initiation of steamwater slugging (waterhammer) in the feedwater lines under certain operating conditions at other plants. Modifications to the feedring include the plugging of the bottom flow holes and the addition of J-tubes to the top of the feedring. This modification is identical to that made at various other plants of similar design and tested successfully at both the Trojan Nuclear Plant and Indian Point 2. In addition, there is no horizontal section in the feedwater lines adjacent to the steam generators. The feedwater lines turn down immediately outside the steam generators. This provides the optimum arrangement for resistance to steam water slugging and no modifications to the feedwater lines were necessary.

Historical - A special waterhammer test was performed on the Sequoyah Unit 1, original steam generator No. 2, to verify that the potential for waterhammer was eliminated by the present steam generator feedwater ring and associated feedwater piping design. The waterhammer phenomenon observed at other plants without the J-tube design occurred on the recovery of steam generator water level from below the feedwater ring while using the AFW System for makeup. The special test consisted of lowering the level of the water in steam generator No. 2 to below the feedring while the unit was at hot standby conditions. The level was maintained there without any water addition for approximately 2 hours to allow time for the feedwater ring to drain. After the draining and waiting period, approximately 440 gal/min of auxiliary feedwater was injected into steam generator No. 2. No water hammer was observed by plant and NRC personnel or measured by test instrumentation. The test procedure was reviewed and approved by the NRC and the test witnessed by NRC personnel.

The Unit 1 replacement steam generators also incorporate top discharge sparger nozzles and gooseneck eliminating the steam leakage into the feedring through the header joints. These design features are intended to prevent the initiation of steam-water slugging or waterhammer. In light of the design compliance with applicable USNRC Regulatory Guides and Branch Technical Positions, waterhammer is not considered as a potential hazard to normal and safety-related operations of the replacement steam generators.

Portions of the AFW System have been evaluated as a high-energy system to determine the effects of pipe whip and jet impingement. The evaluation is described in subsections 3.6.1.1 and 3.6.1.2, and TVA's EN DES report 72-22 and CEB report 76-3.

10.4.7.2.3 Safety Evaluation

For the design bases considerations given in subsection 10.4.7.2.1, sufficient feedwater flow can be provided over the required pressure ranges for the design basis accidents/transients, even when assuming the worst single failure.

Analyses were performed for the limiting transients to define the AFW System performance requirements. Specifically, the limiting transients are:

- Loss of Main Feedwater (LOOP)
- Rupture of a Main Feedwater Pipe
- Rupture of a Main Steam Pipe Inside Containment
- Small Break Loss-of-Coolant Accident

In addition to the above analyses, calculations were performed specifically for the Sequoyah Plant to determine the plant cool down flow (storage capacity) requirements. The loss of all alternating current power is evaluated via a comparison to the transient results of a blackout, assuming an available auxiliary pump having a diverse (nonalternating current) power supply. The large break LOCA analysis, as discussed in subsection 10.4.7.2.1, is not performed for the purpose of specifying AFW System flow requirements. AFW flow is conservatively not modeled in the large break LOCA analysis. Each of the analyses listed above are explained in further detail below.

Loss of Main Feedwater (LOOP)

A loss of feedwater, assuming a loss of power to the reactor coolant pumps, was performed in FSAR Section 15.2.9 for the purpose of showing that for a loss of offsite power transient, a single motor-driven auxiliary feedwater pump delivering flow to two steam generators does not result in filling the pressurizer. Furthermore, the peak RC System pressure remains below the criterion for Condition II transients and no fuel failures occur (refer to Table 10.4.7-1). FSAR Section 15.2.9 summarizes the assumptions used in this analysis. The transient analysis begins at the time of reactor trip. This can be done because the trip occurs on a steam generator level signal, hence the core power, temperatures and steam generator level at time of reactor trip do not depend on the event sequence prior to trip. Although the time from the loss of feedwater until the reactor trip occurs cannot be determined from this analysis, this delay is expected to be 20-30 seconds.

The analysis assumes that the plant is initially operating at 102 percent (calorimetric error) of the Engineered Safeguards Design (ESD) rating, a very conservative assumption in defining decay heat and stored energy in the RC System. The reactor is assumed to be tripped on low-low steam generator level, allowing for level uncertainty. The above FSAR Section (15.2.9) shows that there is a considerable margin with respect to filling the pressurizer. A loss of normal feedwater transient with the assumption that the two smallest auxiliary feedwater pumps and reactor coolant pumps are running even results in more margin.

This analysis may establish the minimum capacity of the smallest single pump and also train association of equipment so that this analysis remains valid assuming the most limiting single failure.

Rupture of Main Feedwater Pipe

The double-ended rupture of a main feedwater pipe downstream of the main feedwater line check valve is analyzed in FSAR Section 15.4.2.2. Reactor trip is assumed to occur when steam generators are at the low-level setpoint (adjusted for errors) and the faulted loop is assumed to be empty. This conservative assumption maximizes the stored heat prior to reactor trip and minimizes the ability of the steam generator to remove heat from the RC System following reactor trip due to a conservatively small total steam generator inventory. As in the loss of normal feedwater analysis, the initial power rating was assumed to be 102 percent of the ESD rating. FSAR Section 15.4.2.2 summarizes the assumptions used in this analysis.

The FSAR analysis shows that a minimum AFW system flow of 410 gal/min to at least 2 intact (non-faulted) steam generators within one minute (following the initiation of a low-low steam generator level signal in any steam generator) at the AFW system design pressure is sufficient to mitigate the event. For the case where the break location results in all of the AFW flow spilling out of the break (i.e., the motor-driven pump aligned to the intact steam generators is assumed to fail), a minimum AFW system flow of 1070 gal/min after 10 minutes to the 3 remaining intact steam generators at the AFW system design pressure is sufficient to mitigate the event. Although this is not a time critical task within the emergency instructions, in this case operator action is credited for isolating the AFW system from the break within 10 minutes following the generation of the low-low steam generator water level reactor trip signal, and the required flow is supplied from a combination of the remaining motor-driven AFW pump and the turbine-driven AFW pump. After event turnaround, less AFW is required to continue plant cooldown. The secondary side steam pressure in the unfaulted steam generators, which drives the turbine-driven pump, reaches and remains at approximately the Main Steam safety valve setpoint pressure during the critical transient time (AFW initiation until event turnaround) and after event turnaround. For both scenarios, the criteria listed in Table 10.4.7-1 are met.

The analysis of the 10 minute case in FSAR Section 15.4.2 assumes the turbine-driven pump supplies 660 gal/min to three steam generators (220 gal/min to each intact steam generator) and that the motor-driven pump supplies 410 gal/min to one steam generator, for a total of 1070 gal/min. To provide the 1070 gal/min total AFW flow, the AFW System at Sequoyah Nuclear Plant provides 440 gal/min from the motor-driven pump, and 630 gal/min from the turbine-driven pump. It has been determined that this flow split does not impact the FSAR analysis results, and therefore is acceptable.

This analysis may establish the capacity of single pumps, establishes requirements for layout to preclude indefinite loss of auxiliary feedwater to the postulated break, and establishes train association requirements for equipment so that the AFW System can deliver the minimum flow required assuming the worst single failure.

Rupture of a Main Steam Pipe Inside Containment

Because the steamline break transient is a cooldown, the AFW System is not needed to remove heat in the short term. Furthermore, addition of excessive auxiliary feedwater to the faulted

steam generator will affect the peak containment pressure following a steamline break inside containment. This transient is performed at three power levels for several break sizes. Auxiliary feedwater is assumed to be initiated at the time of the break, independent of system actuation signals. The maximum flow is used for this analysis, considering a case where runout protection for the largest pump fails and also assuming that the faulted steam generator is at atmospheric pressure. Although this is not a time critical task within the emergency instructions, it is assumed that the AFW System is manually realigned by the operator to isolate auxiliary feedwater to the faulted steam generator at 10 minutes. FSAR Sections 15.4.2.1 and 6.2.1.3.11 summarizes the assumptions used in this analysis. The criteria stated in Table 10.4.7-1 are met.

This transient establishes the maximum allowable auxiliary feedwater flow rate to a single faulted steam generator assuming all pumps operating, established the basis for runout protection, if needed, and establishes layout requirements so that the flow requirements may be met considering the worst single failure. See FSAR Sections 15.4.2.1, 6.2.1.3.11, and AFW Flow Considerations for Containment Pressure Analysis - Steamline Break," (this section) for additional discussion.

Small Break Loss-of-Coolant Accident

The loss of reactor coolant from small ruptured pipes or from cracks in large pipes which actuates Emergency Core Cooling System is evaluated in FSAR Section 15.3.1. For the small break LOCA event, the amount and duration of AFW flow required is dependent on the break size and its location, the reactor power level and power history, and the initial secondary side steam generator inventory. Sufficient AFW flow is necessary to maintain peak clad temperatures within acceptable limits. For the limiting case identified in FSAR Section 15.3.1, a minimum AFW system flow of 660 gal/min distributed equally to 4 steam generators at the AFW system design pressure must be available within one minute (maximum AFW delivery delay time). The secondary side steam pressure, which drives the turbine-driven AFW pump, remains at or near the Main Steam safety valve (MSSV) set point pressure until normal termination of the transient.

The asymmetric flow splits resulting from an AFW pump combination consisting of a motor-driven AFW pump and a turbine-driven AFW pump (coincident single failure of one motor-driven AFW pump train), are difficult to model. Due to this difficulty, the small break LOCA analysis assumes a turbine-driven AFW pump flow rate of 660 gal/min split equally to 4 steam generators and 0 gal/min from the motor-driven AFW pumps. The AFW system is not a balanced flow design, therefore, an equal split is not actually achieved. To account for this, the AFW system at Sequoyah Nuclear Plant meets the small break LOCA flow requirements by delivering a combined flow from 2 motor-driven pumps (single failure of turbine-driven pump) to 4 steam generators in excess of 660 gal/min, and by delivering 660 gal/min from the turbine-driven pump (single failure of a motor-driven pump) with an additional flow contribution from the remaining motor-driven pump. The additional motor-driven AFW pump flow provides assurance that the analysis assumptions are bounded by actual system performance, since the total AFW delivered to the four steam generators as well as the individual flows to each steam generator is increased.

This analysis may establish the capacity of single pumps, and establishes train association requirements for equipment so that the AFW System can deliver the minimum flow required assuming the worst-single failure.

Plant Cooldown

Maximum and minimum flow requirements from the previously discussed transients meet the flow requirements of plant cooldown. A cooldown (reference Table 10.4.7-1) however, defines the requirements and establishes the minimum storage volume for AFW in the CST.

The cooldown is assumed to commence at the ESD rated power, and maximum trip delays and decay heat source terms are assumed when the reactor is tripped. Subsequent to reactor trip, the plant is held in MODE 3 for 2 hours followed by a cooldown to RHR entry conditions (MODE 4) within 6 hours (for a total of 8 hours). Primary metal, primary water, secondary system metal and secondary system water are all included in the stored heat to be removed by the AFW System. See Table 10.4.7-3 for the items constituting the sensible heat stored in the NSSS. Some of the important input conditions are: CST maximum temperature of 120°F; steam generator refill to 39% narrow range level at RHR cut-in; ANS 1994 decay heat standard; B&W heavy actinide heating. Cooldown is analyzed to establish the minimum water volume of 240,000 gallons for each unit for auxiliary feedwater fluid source normal alignment (Reference 3 and 4) .

System Capabilities

Flow rates for all of the design transients described above have been met by the system for the worst single failure. The flows for those single failures considered are tabulated for the various transients in Table 10.4.7-4 including the following:

A. Alternating current train failure
B. Turbine-driven pump failure
C. Motor-driven pump failure
D. LCV failure (turbine-driven pump system)
E. LCV failure (motor-driven pump system)
F. Pressure switch failures (motor and turbine pump systems)
G. AFW System check valve failure (failure to close on reverse flow)

Although this is not a time critical task within the emergency instructions, credit is taken for operator intervention within 10 minutes to meet the minimum flow requirements on the feedline rupture and the maximum flow requirements for the main steamline break inside containment.

The auxiliary feedwater pumps design takes into consideration allowances for pump wear, seal leakage, and pump recirculation flow.

Figure 10.4.7-5 shows the major features, components and isolation capability of the AFW System for the Sequoyah Nuclear Plant.

A comparison of the Sequoyah Nuclear Plant's AFW System with NRC's Standard Review Plan 10.4.9 and with branch technical position ASB 10-1 was provided to the NRC by the April 28, 1980, TVA letter from L. M. Mills to L. S. Rubenstein. An updated version of this comparison is provided in Table 10.4.7-5.

In response to a licensing question concerning short-term and long-term recommendations resulting from a general NRC investigation of the AFW System, the information listed in Table 10.4.7-6 was provided to the NRC by L. M. Mills' January 25, 1980, letter to L. S. Rubenstein.

Following a large break LOCA, the AFW System may be used for supplying water to the steam generators to develop a waterhead within the vessels and thereby prevent potential tube sheet leakage from the primary to the secondary side of the steam generators (refer to subsection 10.4.7.2.1). The two electric motor-driven pumps will be used to supply the feedwater from the condensate water supply or, as a backup, from the seismically qualified, ERCW System. In the event of a failure of one of the electric motor-driven pumps or of one of the emergency electrical power trains, the water supply to two of the steam generators would be available from the turbine driven auxiliary feedwater pump during the short term. During the long term, the two steam generators can be filled from either train of the ERCW System by opening the isolation valves between the ERCW System and the AFW System upstream of the turbine-driven pump. A steam supply to the turbine-driven pumps is not required for this operation. All necessary transfers and controls for this use of the AFW System can be accomplished from the Main Control Room.

Material Compatibility, Codes, and Standards

Generally, components are of carbon steel. Carbon steel components, damaged by erosion corrosion, may be replaced with Cr Mo Steel or other erosion resistant steel. The condensate storage tanks are lined to prevent corrosion, other components are protected by chemical additions to the water.

The industry codes and standards and seismic classification corresponding to these TVA classifications are given in Chapter 3 and Table 3.2.2-1.

System Reliability

In addition to using high quality components and materials, the AFW System provides complete redundancy in pump capacity and water supply for all cases for which the system is required. Under all credible accident conditions, at least one AFW pump is available to supply each steam generator not affected by the accident with its required feedwater.

Redundant electrical power and air supplies assure reliable system initiation and operation. The electric motor-driven pumps are powered by offsite or onsite sources; the turbine-driven pump takes steam from either of two main steam lines upstream of isolation valves.

The Limiting Condition for operation of the AFW System is given in Section 3.7.1.2 of the Technical Specifications.

In response to NUREG 0585, TMI-II Lessons Learned Task Force Final Report, the following information concerning reliability studies on the Sequoyah AFW System was provided: TVA agrees that reliability studies can be useful tools for safety evaluations. TVA initiated a comparative risk analysis of the Sequoyah Plant AFW System.

In response to a licensing question concerning the ability of the AFW System to automatically switchover from the condensate storage tank to the ERCW supply without damage to operating

auxiliary feedwater pumps in the event that the condensate storage tanks are damaged by an OBE, the following information was provided: The automatic, backup transfer to the ERCW takes advantage of the amount of water stored in the seismically qualified suction piping to allow transfer to take place without loss of NPSH to the three auxiliary feedwater pumps. The eight transfer valves are seismic Category I, and the transfer system with associated controls meets the requirements of IEEE-279. Numerical analysis and actual plant tests have been performed, and have verified the proper operation of this transfer scheme. In order to ensure that these pumps are not suction-starved during such an emergency automatic switchover, combinations of suction pressure switches and time-delay devices are used. The pressure set point and timer coordinated valve actions are set so that the pumps will have adequate NPSH under all conditions.

AFW Flow Considerations for Containment Pressure Analysis - Steamline Break

In a response to a licensing question on the generic implications of a letter from Virginia Electric and Power Company on the possibility of overpressurizing the containment during a main steamline break inside containment, the following additional information concerning the effects of auxiliary feedwater flow on the containment pressure analysis was provided (also see Chapter 6.0 of this FSAR and Section 6.2.1 of the Watts Bar Nuclear FSAR for additional details).

The AFW System will be actuated shortly after the occurrence of a steamline break. The mass addition to the faulted steam generator from the AFW System may be conservatively determined by using the following assumptions:

a. The entire AFW System is assumed to be actuated at the time of the break and instantaneously pumping at its maximum capacity.

b. The affected steam generator is assumed to be at atmospheric pressure.

c. The intact steam generators are assumed to be at the safety valve set pressure.

d. Flow to the affected steam generator is calculated from AFW System head curves assumptions b and c above and the system line resistances. The effects of any flow limiting devices are considered.

e. The flow to the faulted steam generator from the AFW System is assumed to exist from the time of rupture to and until realignment of the system is completed.

f. The failure of auxiliary feedwater runout control was considered separately, as a single failure. For this case, the auxiliary feedwater flow was determined using all the assumptions listed above and in addition failure of runout control on an auxiliary feedwater pump.

The assumptions made in the main steamline break inside containment analysis are:

a. Breaks were assumed to be double-ended ruptures occurring at the nozzle of one steam generator.

b. Blowdown from the broken steamline is assumed to be saturated steam.

c. Steamline and feedwater line isolation are completed at 10 seconds (see References 1 and 2 for discussion of common station service transfer additional time delay for the feedwater isolation) after the break occurs. The isolation signal is generated by low steam line pressure signal from the Solid State Protection (SSPS) System.

d. Plant power levels of 100.7 percent of nominal full-load power, 30 percent of nominal full-load power, and zero power were considered.

e. Full double-ended guillotine, 0.6 square foot, and 0.4 square foot ruptures were evaluated.

f. Failures of a main steam isolation valve, a diesel generator, a feedwater isolation valve, and auxiliary feedwater runout control were considered individually.

g. The AFW System is manually realigned by the operator after 10 minutes.

h. For the full double-ended ruptures, the main feedwater flow to the steam generator with the broken steamline was calculated based on an initial flow of 100 percent of nominal full power flow and a conservatively rapid steam generator depressurization. The peak value of this flow occurring just before isolation is 377 percent of nominal for breaks at the exit of the steam generator (i.e., upstream of the flow restrictor) and 326 percent of nominal for breaks at the flow measuring nozzle (i.e., downstream of the flow resistrictor). For the smaller breaks, the same feedwater transient was conservatively assumed.

The AFW System on Sequoyah has not been changed in any way that would adversely affect the conclusions of the original analysis.

The following auxiliary feedwater flow rates are used in the analysis:

(1) With runout protection operational a constant auxiliary feedwater flow rate of 1400 gal/min to the faulted steam generator.

(2) Failure of runout protection was simulated by assuming a constant auxiliary feedwater flow rate of 2040 gal/min to the faulted steam generator.

The maximum auxiliary feedwater flow rates calculated using the assumptions outlined above are provided in Table 10.4.7-4. The analyses performed by Westinghouse for the Sequoyah BIT Removal Analysis addressed the steamline break transients and demonstrated that the limits discussed in the original report were still met for an auxiliary feedwater flowrate of 2250 gpm to a faulted steam generator. Therefore, this analysis bounds the Table 10.4.7-4 values.

The analysis of a spectrum of small steamline breaks used an auxiliary feedwater flow rate of 1380 gal/min. The small break cases have been reanalyzed using auxiliary feedwater runout flow in excess of 2000 gal/min. The blowdown rates are different from those analyzed previously. However, since the peak containment temperature in ice condenser plants is primarily sensitive to the peak enthalpy in the blowdown, no change in peak temperature was observed. The transient temperature response was very similar.

The AFW System will be actuated shortly after the occurrence of a steamline break. In the analysis, the auxiliary feedwater flow to the faulted steam generator was assumed to exist from the time of the rupture until realignment of the system is complete. The AFW System is

assumed to be manually realigned by the operator after 10 minutes. Therefore, the analysis assumes maximum auxiliary flow to a depressurized steam generator for a full 10 minutes. The actions taken by the operator to terminate auxiliary feedwater to the faulted steam generator are discussed below.

Although this is not a time critical task within the emergency instructions, operator action is assumed to terminate the auxiliary feedwater flow to the affected steam generator within 10 minutes. Diagnostic information and emergency instructions are available immediately upon initiation of accident to guide the operator to isolate the faulted SG.

Several failures can be postulated which would impair the performance of various steamline break protection systems and therefore would change the net energy releases from a ruptured line. These are:

1. Main Steam Isolation Valve Failure increases the volume of steam piping which is not isolated from the break. When all valves operate, the piping volume capable of blowing down is located between the steam generator and the first isolation valve. If this valve fails, the volume between the break and the isolation valves in the other steam lines including safety and relief valve headers and other connecting lines will feed the break.

2. Failure of a diesel generator would result in the loss of one containment safeguards train resulting in minimum heat removal capability.

3. Failure of a feedwater isolation valve could only result in additional inventory in the feedwater line which would not be isolated from the steam generator. The mass in this volume can flush into the steam generator and exit through the break. The feedwater isolation valve and the feedwater regulating valve close in no more than 7.5 and 7 seconds, respectively, (Valve closure times reflect original analysis, refer to Sections 10.4.7.1.3 and 6.2.1.3.11.) precluding any additional feedwater from being pumped into the steam generator. The additional line volume available to flush into the steam generator is that between the feedwater isolation valve and the feedwater regulating valve, including all headers and connecting lines.

4. Failure of the auxiliary feedwater runout control equipment would result in higher auxiliary feedwater flows entering the steam generator before realignment of the auxiliary feed system.

The effect of these failures is to provide additional fluid which may be released to the containment by the break or reduce the heat removal capability of the containment safeguard systems.

In the analysis presented in Watts Bar FSAR Section 6.2.1.3.10 and referenced for the Sequoyah Nuclear Plant, the single failures listed above have been combined with various combinations of power level and break size to determine the worst steamline break cases.

Failure of the auxiliary feedwater isolation valve to close has not been considered. The maximum auxiliary feedwater flow that can be delivered to a faulted steam generator has been assumed in the analysis for 10 minutes, two cases being considered: (1) with runout protection operational, and (2) with failure of runout protection. Although this is not a time critical task

with the emergency instructions, the operator takes action to isolate auxiliary feedwater to the broken steam generator within 10 minutes. At that time, if remote controlled auxiliary feedwater isolation valves fail to close, the operator can trip one or both of the auxiliary feedwater pumps feeding the broken steam generator as required to isolate auxiliary feedwater until the failed valve or other(s) in the line is (are) manually closed.

An analysis of a spectrum of steamline break at various power levels assuming several different single failures is reported in FSAR Section 6.2.1.3.12. These analyses include cases assuming failure of auxiliary feedwater runout protection. Operator action to realign auxiliary feedwater has been assumed at 10 minutes. Since the mass and energy release rates are considerably less than the RC System, the reactor plant conditions which impose safety related double-ended breaks and their total integrated energy is not sufficient to cause ice bed meltout, the containment pressure transients generated for the RC System breaks will be more severe.

The mass and energy release data for the various cases analyzed is provided in Watts Bar FSAR Section 6.2.1.3.10 and Chapter 6.0. The assumptions made regarding the time at which active containment heat removal systems become effective and justification for the same are also provided in Chapter 6.0.

NUREG-0578 Item 2.1.7.a

In response to NUREG 0578, the following information concerning auxiliary feedwater was provided:

AUTO INITIATION OF AUXILIARY FEEDWATER (AFW)

SEQUOYAH NUCLEAR PLANT RESPONSE

SUMMARY

Sequoyah complies with all of the requirements of 2.1.7 of NUREG 0578.

Response

The AFW System is automatically initiated by redundant, coincident logic to preclude loss of function due to a single failure and to provide online testability. The AFW System and initiating logic are described in TVA's response to NRC-OIE Bulletin 74-06A and also in this FSAR Section. The auxiliary feedwater control circuitry including the automatic initiating circuitry which performs a safety related function, is safety-grade, Class 1E, and is powered from a power source connected to the emergency power system. Each auxiliary feedwater pump has manual initiation capability independent of the automatic initiation. The alternating current motor-driven pumps and valves are included in the automatic alignment of the loads to the emergency power system.

CLARIFICATION ITEMS

1. Automatic and manual initiation of AFW are provided at Sequoyah.

2. Online testability is provided.

3. Initiating signals are powered from the emergency power system.

4. The alternating current motor-driven pumps and valves are included in the automatic alignment of loads to the emergency power system.

5. Manual initiation capability is provided independent of the automatic initiation.

6. Appropriate electric power is supplied via the emergency power system for all valves where control air is needed for operation.

10.4.7.2.4 Tests and Inspections

Performance tests of individual components in the manufacturer's shop, integrated preoperational tests of the whole system, and vibration tests on system pumps and piping have been performed to assure reliable performance. Periodic performance tests of the actuation circuitry and mechanical components will continue to assure reliable performance. Vibration tests on system pumps and piping are also performed during system preoperational tests. Details of the vibration operational test program are provided in subsection 3.9.1.1.

During plant startup or shutdown, the system can be tested by pumping condensate storage water to the steam generators. ERCW water will not be fed to the steam generators during this test. The functionality of the ERCW admission valves is tested without feeding ERCW to the SG. Capability of the ERCW pumps is discussed in Section 9.2.

The Class 2 and 3 components of the AFW System are designed to comply with ASME Section XI, Inservice Inspection of Nuclear Power Plant Components, to the extent practical under the original design. Class 2 and 3 components will be inspected per the Inservice Inspection Program (Section 5.2.8). Inservice tests of the AFW system pumps and valves will be performed in accordance with ASME XI (see Section 6.8).

Auxiliary feedwater pump endurance tests for both motor-driven and the turbine-driven pumps were performed prior to exceeding 5 percent power in accordance with the operating license and NRC Task Action Plan Item II.E.1.1. See Table 10.4.7-6.

Surveillance test requirements are given in Section 4.7.1.2 of the Technical Specifications, Auxiliary Feedwater System.

10.4.7.2.5 Instrumentation Application

The three pumps and support systems start automatically on a loss of offsite power (under voltage on the 6.9 kV shutdown boards), stoppage of both main feedwater pumps, a safety-injection signal, or loss of one main feedwater pump at loads greater than approximately 77 percent (Unit 2) and 76.6 percent (Unit 1). The electric motor-driven supply also starts automatically on a two-out-of-three low-low-level signal from any steam generator, and the turbine-driven supply starts automatically on a two-out-of-three low-low level signal from any two steam generators. The automatic low-low level signal is delayed at low power levels by a trip time delay (TTD) function as described in

FSAR Chapter 7.2. All three pumps also start automatically upon initiation of Anticipated Transient Without Scram (ATWS) Mitigating System Actuation Circuitry (ASMAC) when there is a common mode failure within RPS and low-low steam generator levels exist in three (3) out of four (4) steam generators coincident with plant power levels above approximately 40 percent. Refer to Subsection 7.7.1.12 for system description. All pumps can be started either remote-manually or locally and satisfy the requirements of Regulatory Guide 1.62.

Located between the motor-driven pumps and each steam generator fed by the pump is a modulating level control valve. The valves are normally closed and upon receipt of an opening, arming or enable signal the control transfers from manual to automatic modulating level control. These valves will automatically maintain steam generator water level during AFW System operation. At low steam generator pressure, the control signal is automatically transferred to a smaller level control valve for the motor-driven pumps which is designed for extended operation at low flows and high pressure drops. The system may be controlled manually. If the above systems are being tested in the manual mode and an automatic start signal is received, the controls will revert to automatic. After an accident, the operator can take manual control by blocking the accident signal with the handswitch (the block is reset when the accident signal is removed). However, if the original signal clears and another accident signal occurs after a first accident signal was reset (such as would happen if the operator allowed the steam generator water level to drop to the low-low-level) then the controls will again revert to automatic.

Located between the turbine-driven pump and each steam generator is an air operated level control valve. The valves are normally closed and automatically open upon receipt of an accident/enable signal. When one or both motor-driven auxiliary feedwater pumps are not available, the main control room operator must take manual control of the turbine-driven pump and valves to maintain level in the steam generators which would have been fed by the inoperable motor-driven pump(s). Provisions are also available for manual steam generator level control from the local auxiliary feedwater control panel should the main control room become uninhabitable. When the turbine-driven pump is required to maintain steam generator level, the operator will control the steam generator level by manually adjusting auxiliary feedwater flow via the auxiliary feedwater turbine controller. If required, the valves between the turbine-driven pump and each steam generator may be closed or opened by the operator. The number of valve operations is limited during SBO due to the limited quantity of air available in accumulators upon loss of normal control air supply.

The bypass modulating level control valves for the motor-driven AFW System are air operated and are fail-close valves. The normal level control valves for the motor-driven AFW are fail-open. The turbine-driven pump level control valves are fail-open and have air accumulators and high-pressure air cylinders. This air supply is adequate to stroke open/close (manually) the LCV as necessary in order to enhance system's ability to supply water to the steam generator during the SBO. In the event of a single failure of one level control valve (which affects flow to one steam generator from either a motor-driven pump or the turbine-driven pump), auxiliary feed flow can still be provided to all four steam generators.

The ERCW supply valves for the AFW System are automatic, multiple, qualified valves which admit ERCW water (a fully qualified system) to the suctions of the AFW pumps when required to supply adequate NPSH and suction pressure to these pumps. An alarm for low pressure in the suction lines of the three AFW pumps will annunciate in the Main Control Room.

Appropriate instrumentation such as valve position, flow, pressure, and steam generator level is provided to permit verification of proper system operation. The operation of the AFW System can be monitored using Class 1E instrumentation located in the control room. There is a single indication of the flows into each steam generator, and pump operating status lights for the motor-driven pumps. There is one indication in the main control room for the level in each condensate storage tank. There is local indication for suction and discharge pressure for the turbine- driven AFW pump.

Figures 10.4.7-3 and 10.4.7-4 give details of the pump logic. TVA's logic and control symbols are explained in Appendix 7A.

In response to a licensing question concerning the heatup of the steam generator level measurement (reference leg) instrumentation used for auxiliary feedwater control during a pipe break, the following information was provided: The Sequoyah AFW Systems use transmitters separate from the NSSS System. These transmitters share sense lines, so the heatup problem will affect both. TVA believes the AFW System is satisfactory in that the insulation on the sense line delays the heatup so operator action will not be required for 10 minutes. Sequoyah's emergency procedures specify criteria (levels, etc.) which take into account temperature effects on the reference leg for use during transients involving adverse containments. To further ensure that water is reaching the steam generator, AFW flow to each steam generator is indicated in the control room. The AFW flow transmitters are located in the Auxiliary Building (in a harsh environment and are qualified for this environment).

10.4.8 Steam Generator Blowdown System (SGB)

10.4.8.1 Design Bases

a. To achieve optimum effectiveness in the control of steam generator water chemistry, continuous blowdown is normally maintained from each steam generator during plant operation.

b. The minimum and maximum blowdown flowrate will be 20 gpm and 270 gpm as measured downstream of the second stage heat exchanger.

c. Blowdown may be discharged to the cooling tower blowdown (CTB) provided that the radioactivity concentration of the blowdown effluent can be properly diluted. If the concentration exceeds the high activity monitor setpoint while in the cooling tower mode, the blowdown will automatically be terminated. In addition, SGB Sample System drains must be realigned from the Turbine Building sump to the FDT. Monitor setpoints are based on blowdown rate, available dilution flow as specified in the ODCM and permissible discharge concentrations.

The SGB System discharge will normally be sampled and analyzed at least daily by either online monitors or grab samples during power operation. When blowdown is being treated, analyses will be performed as often as necessary for evaluation of equipment performance.

SGB System components will be designed in accordance with the following:

Blowdown Flash Tank

Type: Carbon steel designed to ASME Boiler and Pressure Vessel Code, Section VIII, Division 1
Quantity: One per unit
Pressure: Design for 150 lb/in^{2}g and 30 inch Hg vacuum

Heat Exchangers

Stacked Heat Exchangers

TEMA type:	NFU
TEMA class:	R (specifies ASME Section VIII, Division I)
No. of shells:	2
Maximum cooling water pressure drop (tube side):	4 psi
Maximum blowdown pressure drop (shell side):	20 psi
Duty:	73.557 x 10^6 Btu/hr
Tube side design pressure temperature:	410 psig and 300°F
Shell side design pressure and temperature:	1085 psig and 600°F

Second Stage Heat Exchanger

TEMA type:	NFU
TEMA class:	R (specifies ASME Section VIII, Division I)
No. of shells:	1
Maximum cooling water pressure drop (tube side):	3 psi

Maximum blowdown pressure drop (shell side):	20 psi
Duty:	4.008 x 10^6 Btu/hr
Tube side design pressure temperature:	410 psig and 200°F
Shell side design pressure and temperature:	1085 psig and 200°F

Control Valves at Individual Stations

To achieve optimum effectiveness in the control of steam generator water chemistry, continuous blowdown is normally maintained at between 20 and 270 gal/min (as measured downstream of the second stage heat exchangers). The blowdown rate will be manually increased or decreased to meet water chemistry requirements. The blowdown rate will be controlled by the manual adjustment of the Blowdown Regulating Valve which is located downstream of the heat exchangers. Any "balancing" or "proportioning" of the flow from the four individual steam generators will be accomplished with the Manual Throttling Valves.

The safety related isolation valves are air operated, spring failed closed, globe valves.

The SGB isolation valves inside containment, SGB sampling isolation valves, and SGB isolation valves outside containment shall close upon receipt of a containment "phase A" isolation signal. Auxiliary feedwater initiation signal shall close the SGB isolation valve outside containment and SGB sampling isolation valve. The SGBD isolation valves outside containment do not go closed if the AFWP(s) are in operation and receive an auto-start signal for design basis accident mitigation. See Reference 5 for the acceptability of SGBD in service with AFW in service.

The CTB valves shall be closed when radioactivity concentrations reach monitor setpoints.

10.4.8.2 System Description

A flow diagram of the SGB System is shown in Figure 10.4.8-1.

Each steam generator is provided with a blowdown connection for controlling the solids and soluble content of the secondary coolant. The blowdown flow rate from each steam generator can be individually regulated using manual throttling valves. The normal blowdown rate from each steam generator ranges from 5 to 60 gal/min.

The individual SGB lines join into a common header and from there can be routed for processing or discharge through one or two flow paths, through the SGB flash tank or through the SGBD heat exchangers. Vapors from the flash tank are routed to the main condenser. Liquid from the heat exchanger path can be routed to the CTB for discharge or to the CPDS. Choice of flow path and process is dependent upon plant operating mode and secondary chemistry.

The water discharge from the blowdown system will be monitored for radioactivity by a radiation monitor during release. The high activity alarm will alert the operator of an increasing radioactivity level. If the radioactivity concentration (except tritium) exceeds the high activity setpoint when dumping to the CTB, the water discharge from the steam generator blowdown will be terminated.

The monitor obtains a representative sample from the blowdown liquid effluent discharge system in the turbine building. The radiation level associated with each individual steam generator blowdown line can be determined by chemistry sampling through sampling points just outside containment such that the leaking steam generator can be identified.

The SGB System also provides for an additional blowdown path during the abnormal event of a flood above plant grade. The normal blowdown paths are isolated and blowdown may be released to the roof of the main steam relief valve room. This system permits both constant low-flow and intermittent high-flow blowdown. Manually operated blowdown valves are provided that are accessible during the flood condition. The design for this flood event assumes that offsite power is not available and that this mode of operation will exist for at least 100 days.

10.4.8.3 Safety Evaluation

Capacity

The SGB System provides capacity to handle a maximum of 270 gal/min of blowdown flow per unit to be sent to the CDPS or discharged. This system is sufficient to treat the highest expected blowdown flow rate from the steam generators.

Radioactivity Releases

During normal operation, the system uses heat exchangers to cool the blowdown liquid. When using the flash tank, the vapor carries with it radioactive materials, principally iodine and noble gases. This vapor is routed to the condenser and is contained in the secondary system. When operating in the heat exchanger flow path, all radioactive materials are also retained in the secondary system.

During operation of a unit with significant primary-to-secondary leakage, all of the blowdown liquid is treated by the CDPS.

Operation with primary-to-secondary leakage results in a buildup of radioactivity in the secondary system. When a leak occurs in one of the steam generators, the radioactivity level increases in that steam generator. If the radioactivity concentration exceeds the high activity setpoint at the blowdown discharge, an alarm alerts the operator of the increasing radioactivity level. If blowdown is being discharged to the CTB and the radioactivity concentration exceeds the high activity setpoint, the blowdown is automatically terminated. At that point, the plant must also realign the SGB sample drains from the Turbine Building sump and divert them to the FDCT. The high activity setpoint is based on blowdown rate, available dilution flow as specified in the ODCM and permissible discharge concentration.

Figure 10.4.8-2 shows gross radioactivity concentrations (except tritium) in the secondary system after 1 year as a function of blowdown rate. The curve is based on the following assumptions:

Primary-to-secondary leak rate, 100 lb/day
Percent of fuel leaking radioactivity, 0.12 percent

The ability to process radioactive blowdown at high rates has a significant effect on the release of airborne radioactive iodine from the plant.

Figure 10.4.8-3 shows releases of I-131 from the vacuum pumps exhaust and turbine building ventilation air as a function of blowdown rate. The following assumptions were used:

Primary-to-secondary leak rate, 110 lb/day
I-131 in primary coolant, 0.625 μCi/gram (0.25 percent of fuel releasing radioactivity)
Steam generator partition factor, 0.01
Main condenser/vacuum pumps decontamination factor, 2000
Air ejector HEPA filter/charcoal absorber decontamination factor, 10
Turbine building steam leak rate, 1700 lb/h

Radioactivity releases due to normal operation of the SGB System are discussed in subsection 11.2.

System Performance During Abnormally High Primary-to-Secondary Leakage

Abnormally high primary-to-secondary leakage has no significant effect on the blowdown system. A leak rate in excess of the technical specification limit requires shut down of the unit. The blowdown system is capable of operating with a leak rate approaching 1 gal/min. A 1 gal/min leak rate would not require that the blowdown rate be increased above 60 gal/min in order to maintain specified secondary system water chemistry unless it occurred at a time when condenser inleakage was high. With a 1 gal/min leak and about 0.12 percent failed fuel, radiation levels in the vicinity of the blowdown treatment system equipment would be higher than with normal operating levels, but would be below design levels.

In the event of a primary-to-secondary leak in excess of 1 gal/min, the blowdown system could be operated after unit shutdown in order to clean the secondary system.

Failure Analysis of System Components

Analyses of various failures in the system are given in Table 10.4.8-1.

10.4.8.4 Tests and Inspections

Prior to operation of the SGB System, instruments will be calibrated, and interlocks and controls will be tested to verify that they function properly.

The Class B portions of the SGB System are designed to comply with the 1974 edition of ASME Section XI, Inservice Inspection of Nuclear Power Plant Components, to the extent practical under the original design. Class B piping and valves will be inspected per the Inservice Inspection Program discussed in subsection 5.2.8. Inservice testing of Code Class 2 valves will be tested as outlined in the ASME Inservice Valve Testing Program basis document which is referenced in Section 6.8 of the FSAR.

Routine inspections and maintenance will be performed on system components in accordance with approved plant procedures.

10.4.8.5 Instrumentation Applications

Instrumentation is provided to perform the logic functions, described herein.

10.4.9 Heater Drains and Vents

10.4.9.1 Design Bases

The Heater Drain system is designed to remove and dispose of all drainage from the moisture separators, reheaters, feedwater heaters, main feed pump turbine condensers and gland steam condensers during all modes of unit operation by returning the condensed water back to the Condensate- Feedwater System.

The Vent System is designed to adequately vent all heat exchangers to assure complete removal of noncondensable gases during all modes of unit operation.

10.4.9.2 System Description

The flow diagrams for the Heater Drains and Vent System are shown in Figures 10.4.9-1 and 10.4.9-2.

To accomplish the design objectives of subsection 10.4.9.1, the following equipment is provided (per unit):

a. No. 3 heater Drain Pumps

b. No. 7 Heater Drain Pumps

c. Feedwater Heaters

Shell side design conditions only given here. See subsection 10.4.7, Condensate-Feedwater System, for channel side design conditions.

Number - 21 (3 strings of 7 heaters)

Heater No.	Shell Design Pressure	Shell Design Temperature
1	450 lb/in^{2}g	650°F
2	300 lb/in^{2}g	650°F
3	232 lb/in^{2}g	380°F
4	75 lb/in^{2}g	380°F
5	50 lb/in^{2}g	650°F
6	50 lb/in^{2}g	650°F
7	50 lb/in^{2}g	650°F

d. Main Feed Pump Turbine Condensers

Shell side design conditions only given here. See subsection 10.4.7, Condensate-Feedwater System, for channel side design conditions.

Number - 2
Shell Design Pressure - 20 lb/in^2 and 30 inches Hg vacuum
Shell Design Temperature - 160°F

e. No. 7 Heater Drain Tank

Number - 1
Design Pressure - 1 inch of Hg absolute to 50 lb/in^{2}g
Design Temperature - 175°F

f. No. 3 Heater Drain Tank

Number - 1
Design Pressure - 200 lb/in^{2}g
Design Temperature - 377°F

g. Moisture Separator Drain Tanks

Number - 6
Design Pressure - 250 lb/in^{2}g
Design Temperature - 401°F

h. High Pressure Reheater Drain Tanks

Number - 6
Design Pressure - 1200 lb/in^{2}g
Design Temperature - 567°F

i. Low Pressure Reheater Drain Tanks

Number - 6
Design Pressure - 500 lb/in^{2}g
Design Temperature - 467°F

j. Main Feed Pump Turbine Condenser Drain Tanks

Number - 1
Design Pressure - 1 inch of Hg absolute to 16 lb/in^{2}g
Design Temperature - 101°F

k. Main Feed Pump Turbine Condenser Drain Pumps

Number - 2
Manufacturer - Crane Deming Pumps
Type: 3M, single stage, single suction, centrifugal
Design Point: 380 gal/min, 57 feet head
Motor Design: 10 hp, 3 ph, 60 Hz, constant speed
Motor Manufacturer - U.S. Electric Motors

The shell side of feedwater heaters are equipped with manually valved vent lines as necessary for ventilation during unit startup. The tube side of feedwater heaters are also equipped with manually valved vent lines as necessary for ventilation during unit startup. Feedwater heaters No. 3 & 7 do not have manually valved startup vent lines for ventilation to the atmosphere. Venting to the main condenser of the heater's shell side during normal operation is accomplished through continuous "free blowing" orifices, sized in accordance with recommendations of the Heat Exchange Institute Standards for Closed Feedwater Heaters, 1968. The venting scheme for the high pressure reheaters and low pressure reheaters use air operated valves routed to the condenser during startup. Venting during normal operation is accomplished through air operated valves to the #1 or #2 extraction lines for the high pressure and low pressure reheaters, respectively.

The heaters are numbered from 1 to 7 with the highest pressure designated as No. 1. During normal unit operation, the No. 1 heater drains, composed of the high pressure reheater drains and the No. 1 extraction, cascade into the shell of the No. 2 heater. The No. 2 heater drains, the No. 1 drains, plus the No. 2 extraction and the low pressure reheater drains, cascade into the No. 3 heater drain tank. The No. 3 heater drains (No. 3 extraction) and the moisture separator drains also flow into the No. 3 heater drain tank. Water from the No. 3 heater drain tank is then pumped forward into the condensate cycle (between the No. 3 and No. 2 heaters) by the No. 3 heater drain pumps.

The first extraction from the low pressure turbines is condensed in the No. 4 heaters. These drains are cascaded into the shell of the No. 5 heaters. No. 5 heater drains (No. 5 extraction plus No. 4 heater drains) cascade to the No. 6 heater, whose drains cascade in turn to the No. 7 heater drain tank. The condensed No. 7 extraction and other miscellaneous drains are routed to the No. 7 heater drain tank. This main feed pump turbine condenser drains are pumped to the piping between the No. 7 heater drain tank and the No. 7 heater drain pumps. Water from the main feed pump turbine condenser drains and the No. 7 heater drain tank is pumped forward into the condensate system (at a point between the No. 7 and No. 6 heaters) by the No. 7 heater drain pumps.

Proper level is maintained in the Nos. 1, 2, 4, 5, and 6 feedwater heaters by modulating level control valves that receive their control signal from level indicating controllers mounted on the heater shells. Should the level drop below the normal control range, a low level alarm is sounded. High level in the shells of the No. 2, 5, and 6 heaters results in annunciation of a high level alarm. The No. 1, 2, and 4 heaters are equipped with modulating bypass to condenser valves. Should the level in a No. 1, 2 or 4 heater exceed the normal control level, the bypass valve begins to open. Indication is given in the control room when the bypass valve leaves its seat. If the level exceeds the control range of the bypass valve, high level annunciation occurs. High-high level in a No. 1 heater results in isolation (of both feedwater and extraction steam) of that heater. High-high level in a No. 2 or No. 4 heater results in isolation of the appropriate bank of No. 2, 3, and 4 heaters. High-high level in a No. 5 or 6 heater results in isolation of the appropriate bank of No. 5, 6, and 7 heaters.

All No. 3 and No. 7 heaters are "dry" shelled heaters. Thus, particular care in piping design was taken to ensure that choking of drains as a result of steam entrainment will not occur.

Level in the No. 3 heater drain tank is maintained within the proper range by modulating level control valves at the discharge of the No. 3 heater drain pumps. Level in excess of normal

control range initiates opening of modulating bypass to condenser valves. Indication that the bypass to condenser valve has left the fully closed position is given in the control room. Additional increase in level to a point above the range of the bypass valves annunciates a high level alarm. Low level in the drain tank results in a trip of all operating No. 3 heater drain pumps.

A level control scheme similar to that for the No. 3 heater drain tank is provided for the No. 7 heater drain tank.

The moisture separator drains are routed to the No. 3 heater drain tank, low pressure reheater drains to the No. 2 heater shells, and the high pressure reheater drains to the No. 1 heater shells.

Since all moisture separators and reheaters are "dry" shelled vessels, particular care in design of drain piping was taken to prevent choking of drain flow due to steam entrainment between these vessels and their individual drain tanks.

MSRH drain control is provided by maintaining proper level in drain tanks connected to the individual moisture separators, HP reheaters and LP reheaters. This level is controlled in the individual drain tanks by modulating level control valves (one per tank).

Level in excess of the normal control range causes a modulating bypass to condenser valve (one per tank) to open. Indication that a bypass valve has left the fully closed position is given in the main control room. Increase in level to above the control range of the bypass to condenser valve results in a high level alarm being annunciated in the control room. Low level alarm is also annunciated if the level drops below the normal control range.

Air assisted nonreturn valves are provided in each MSRH drain line downstream of the point where the bypass to condenser piping is connected so that, in the event of a turbine pressure transient due to a load rejection, the water stored in the feedwater heaters cannot flash back to the MSRH. The bypass to condenser valves will still be available for level control during a transient of this type.

Feedwater heaters are designed in accordance with applicable sections of Heat Exchange Institute Standards for Closed Feedwater Heaters, Standards of Feedwater Heater Manufacturers Association, Incorporated, and Section VIII, Unfired Pressure Vessels, of the ASME Boiler Code. The No. 3 and No. 7 heater drain tanks are designed in accordance with Section VIII, Unfired Pressure Vessels of the ASME Boiler Code. All moisture separators, reheaters, and associated drain tanks are designed to Section VIII of the ASME Code. All piping and valves in the Heater Drains and Vents System are designed in accordance with ANSI B31.1.

A single drain tank receives the drains from both main feed pump turbine condensers. Normal water level in the tank is maintained by a level control valve at the drain pump discharge that receives its control signal from a level indicating controller mounted to the drain tank. Level below the control range of the controller results in annunciation of a low level alarm. Level above the control range results in annunciation of a high level alarm and coincides with opening of a bypass to condenser valve. Direct operator action is required to close bypass valve after it has opened. The main feed pump condenser drains are equipped with two pumps which take suction from a single drain tank. One pump is started manually while the second pump is put on

standby by placing the selector switch in the auto position. Should the pressure in the discharge of the active pump drop below 25 lb/in^{2}a, the standby pump is automatically started. All pumps conform to applicable paragraphs of the centrifugal pump section of the standards of the Hydraulic Institute in effect when the pumps were purchased.

The three No. 3 heater drain pumps are started as the unit load increases. Conditions that must be satisfied before any pump can start include:

a. Level in the No. 3 heater drain tank above a permissive level set point.

b. Sufficient lubricating oil pressure.

The pumps are manually tripped as load decreases and are no longer needed. In addition, the pumps may be tripped by low level in the No. 3 heater drain tank, low lube oil pressure, or a motor protection signal.

Minimum flow for pump protection is provided by an automatic recirculation control valve at the discharge of each pump.

The No. 7 heater drain pumps are controlled in the same manner as the No. 3 heater drain pumps. A trip of the main turbine will result in manual tripping of all No. 3 and No. 7 heater drain pumps due to low flow.

Typically, at feedwater flows less than 40 percent, all No. 3 and No. 7 heater drains are routed to the condenser. This allows the drain flow to pass through the condensate demineralizers during low load operation. This increases the cleanup rate of the feedwater and prevents corrosion products from the heater drains, which could build up during an outage, from being introduced into the steam generator.

10.4.9.3 Safety Evaluation

With few exceptions, the operating mode of the Heater Drains System has no effect on the Reactor Coolant System and the ability of the Condensate-Feedwater System to deliver feedwater to the steam generators in sufficient quantity to meet all system demands. However, some transient conditions can exist that do require proper interfacing between the heater drains system and other secondary cycle systems to prevent a reactor trip.

With all drains from the No. 3 heater drain tank being bypassed to the condenser (and being passed through the hotwell, demineralized condensate, and condensate booster pumps) the Condensate-Feedwater System can deliver approximately 82 percent (Unit 2) and 81.6 percent (Unit 1) guaranteed flow to the steam generators. Sufficient capacity does exist in the Condensate-Feedwater System pumps however, such that if the No. 3 heater drain pumps discharge exceeds 5500 gpm, full load operation for the unit can be maintained. However, due to TVA-imposed limitations, the Unit Main Turbine Generator will receive a signal to run the unit back to approximately 77% (Unit 2) and 76.6% (Unit 1) load if: (a) either No. 3 Heater Drain Tank bypass valve is open, (b) the main turbine generator is loaded to greater than approximately 82% (Unit 2) and 81.6% (Unit 1), and (c) after receiving a delayed indication of less than 5500 gpm from the discharge header of the No. 3 Heater Drain Tank Pumps.

Trip of a No. 3 heater drain pump during operation at unit load in excess of approximately 82 percent (Unit 2) and 81.6 percent (Unit 1) produces a low differential pressure across the No. 3 heater drain pump station (indicating that the remaining pumps are passing excessive flow and are in danger of damage due to insufficient NPSH). As a result, one of the two level control valves in the drain pump discharge is tripped closed for pump protection. This action may cause opening of the bypass to condenser valve and subsequent runback to the 77 percent (Unit 2) and 76.6 percent (Unit 1) load condition.

A trip of a No. 3 or No. 7 Heater Drain tank pump or a feedwater heater string isolation may require operator action to reduce load to maintain adequate Main Feedwater pump inlet pressure.

10.4.9.4 Inspection and Testing

All pumps, heaters, and pressure vessels in the Heater Drains, and Vents System will be tested by the manufacturer in accordance with the codes under which they were manufactured. Since there are no ASME, Section III components in this system, no inservice inspection is required.

10.4.9.5 Instrumentation

Sufficient instrumentation is provided to permit personnel to conveniently and safely operate this system and to provide proper interfacing with the Reactor Coolant System.

10.4.10 References

1. Letter from B. J. Garry of Westinghouse to P. G. Trudel of TVA dated June 6, 1991, TVA-91-170 (B25 910614 252).

2. Letter from B. J. Garry of Westinghouse to P. G. Trudel of TVA dated December 11, 1991, TVA-91-342 (B25 911226 001).

3. Technical Specification Change TVA-SQN-TS-02-06, Plant Systems, Condensate Storage Tank, 3/4.7.1.3; November 15, 2002.

4. TVA Letter TVFTI-071, Condensate Storage Tank Minimum Contained Volume Evaluation, dated November 4, 2002 (B38 021104 802).

5. Framatome ANP letter FANP-05-2506, SG Blowdown Isolation Logic Evaluation – Full Power AFW Test, dated July 21, 2005 (B38050721803).

TABLE 10.4.1-1

MAIN CONDENSER RADIOACTIVE MATERIAL ACTIVITY DURING POWER OPERATION AND SHUTDOWN

Isotope	Activity, µCi/gm
84_{Br}	0.12×10^{-8}
$85_{Kr}M$	0.0
85_{Kr}	0.0
87_{Kr}	0.0
88_{Kr}	0.0
88_{Rb}	0.14×10^{-7}
89_{Rb}	0.33×10^{-9}
89_{Sr}	0.60×10^{-6}
90_{Sr}	0.18×10^{-10}
91_{Sr}	$0.13 \times 10^{-9)}$
90Y	0.21×10^{-10}
91_{Y}	0.88×10^{-9}
$91_{Yi}M$	0.38×10^{-10}
99_{Mo}	0.73×10^{-6}
$99_{Tc}M$	0.43×10^{-6}
99_{TC}	0.36×10^{-14}
132_{Te}	0.37×10^{-7}
134_{Te}	0.24×10^{-9}
$133_{Xe}M$	0.0
133_{Xe}	0.0
$135_{Xe}M$	0.0
135_{Xe}	0.0
138_{Xe}	0.0
131_{I}	0.15×10^{-5}
132_{I}	0.21×10^{-6}
133_{I}	0.16×10^{-5}
134_{I}	0.25×10^{-7}
135_{I}	0.48×10^{-6}
134_{Cs}	0.33×10^{-7}
136_{Cs}	0.22×10^{-7}
137_{Cs}	0.17×10^{-6}
138_{Cs}	0.62×10^{-8}
$137_{Ba}M$	0.16×10^{-6}
140_{Ba}	0.66×10^{-9}
140_{La}	0.34×10^{-9}
144_{Ce}	0.44×10^{-10}
51_{Cr}	0.59×10^{-9}
54_{Mn}	0.50×10^{-9}
56_{Mn}	0.32×10^{-8}
59_{Fe}	0.66×10^{-9}
58_{Co}	0.16×10^{-7}
60_{Co}	0.48×10^{-9}

TABLE 10.4.7-1

CRITERIA FOR AUXILIARY FEEDWATER SYSTEM DESIGN BASIS CONDITIONS

Condition or Transient	Classification*	Criteria*	Additional Design Criteria
Loss of main feedwater	Condition II	Peak RCS pressure not to exceed design pressure. No consequential fuel failure	
Loss of Offsite Power (LOOP)	Condition II	(same as LMFW)	Pressurizer does not fill with 1 single motor-driven auxiliary feed pump feeding 2 SGs
Feedline rupture	Condition IV	10 CFR 100 dose limits. Containment design pressure not exceeded	Core does not uncover
Loss of all alternating curent power	NA	Note 1	Same as LOOP assuming turbine-driven pump. Station Blackout (SBO) Rule.
Loss of coolant	Condition III	10 CFR 100 dose limits 10 CFR 50 PCT limits	
	Condition IV	10 CFR 100 dose limits 10 CFR 50 PCT limits	
Cooldown	NA	Technical Specification Bases 3/4.7.1.3	100° F/hr 547° F to 350° F

*Ref: ANSI N18.2 (This information provided for those transients performed in the FSAR).

Note 1: Although this transient establishes the basis for AFW pump powered by a diverse power source, this is not evaluated relative to typical criteria since multiple failures must be assumed to postulate this transient.

TABLE 10.4.7-2

AUXILIARY FEEDWATER PUMP PARAMETERS

Total Number Per Unit	3
Electric Driven	2
Turbine Driven	1
Design Flow Rate, gpm	
Electric Driven, each	440
Turbine Driven	880
Design Pressure, psig	1650
Design Temperature, °F	40 to 120
Design Head, ft.	
Electric Driven, each	2900
Turbine Driven	2600

TABLE 10.4.7-3

SUMMARY OF SENSIBLE HEAT SOURCES

Primary Water Sources (initially at ESD power temperature and inventory)
- RCS fluid
- Pressurizer fluid (liquid and vapor)

Primary Metal Sources (initially at ESD power temperature)
- Reactor coolant piping, pumps, and reactor vessel
- Pressurizer
- Steam generator tube metal and tube sheet
- Steam generator metal below tube sheet
- Reactor vessel internals

Secondary Water Sources (initially at ESD power temperature and inventory)
- Steam generator fluid (liquid and vapor)
- Main feedwater purge fluid between steam generator and AFWS piping

Secondary Metal Sources (initially at ESD power temperature)
- All steam generator metal above tube sheet, excluding tubes.

TABLE 10.4.7-4 (Sheet 1)

AUXILIARY FEEDWATER FLOW [1] TO STEAM GENERATORS

FOLLOWING AN ACCIDENT/TRANSIENT WITH SELECTED SINGLE FAILURE - GAL/MIN

Single Failure

Accident/Transient	Elec. Train Failure A	TD Pump Failure B	MD Pump Failure C	LCV Failure TDAFP System D	LCV Failure MDAFP System E	Pr. Sw Failure MD F	CV[2] Failure G
1. Loss of main FW	1070	880	1070	1510	1510	1510	1540
2. Feedline rupture	(3)	440	(3)	440	440 (4)	440	440
3. Blackout	1070	880	1070	1510	1510	1510	1540
4. Cooldown	1070	880	1070	1510	1510	1510	1540
5. Main steamline rupture	(3)	440	(3)	440	440	440	440
6. Main steamline (flow through break)	<1440	<1440	<1440	<2250(5)	<1440	<1440	<1440

TABLE 10.4.7-4 (Sheet 2)

AUXILIARY FEEDWATER FLOW [1] TO STEAM GENERATORS

FOLLOWING AN ACCIDENT/TRANSIENT WITH SELECTED SINGLE FAILURE - GAL/MIN

Single Failure

Notes:

(1) Items 1 through 5 are minimum available flows to intact loops; item 6 is maximum possible flow to the faulted loop.

(2) Including only those CV's in the AFWS. "Failure" is interpreted as failure to close on reverse flow; failure of the CV to open to permit flow in the normal direction is not considered.

(3) Although this is not a time critical task within emergency instructions, ten minute operator action is assumed to isolate AFW flow to faulted loop. After switchover to the bypass, LCV (MD pump) feeding the faulted loop, flow is ~200 gal/min to unfaulted loops; after operator action, flow is >1070 gal/min to unfaulted loops.

(4) Flow is >440 gal/min to one steam generator. After 10 minutes (with operator action to isolate AFW flow to faulted loop), total available flow will be >1070 gal/min.

(5) Maximum flow through mainsteam break is <2250 gal/min. This is based on a turbine runout protection failure (turbine runs up to its high speed stop) and not an LCV failure (TDAFP). For LCV failure (TDAFP), flow through break would be <1440 gal/min.

TABLE 10.4.7-5

AUXILIARY FEEDWATER SYSTEM COMPARISON
TO SRP 10.4.9 AND BTP ASB 10-1

The following comments evaluate the Sequoyah Auxiliary Feedwater System (AFWS) with respect to the acceptance criteria of SRP 10.4.9. The numbering corresponds to part II of SRP 10.4.9. Each requirement of SRP 10.4.9 has been previously addressed in the Sequoyah FSAR or in previous responses to NRC questions. Reference will be made to this existing material as appropriate.

1. GDC2 - See FSAR sections 10.4.7.2.1, 10.4.7.2.2, and 10.4.7.2.3.
2. GDC4 - See FSAR section 10.4.7.2.2.
3. GDC5 - See FSAR section 10.4.7.2.2.
4. GDC19 - See the entire FSAR section 10.4.7.2.
5. GDC44
   (a) Same as number 4 above.
   (b) See FSAR sections 10.4.7.2.1, 10.4.7.2.2, and 10.4.7.2.3.
   (c) The only nonessential portion of the auxiliary feedwater (AFW) is the condensate supply which is isolated from the remainder of the system by check valves. All components required to maintain the essential functions of the AFW, including isolation of disabled equipment, are self-actuated, automatic, or operable from the main control room. This information is included in FSAR sections 10.4.7.2.1, 10.4.7.2.2, and 10.4.7.2.3, but not explicitly stated. These statements are made here for clarification.
6. GDC45 - See FSAR section 10.4.7.2.4.
7. GDC46 - See FSAR sections 10.4.7.2.4 and 14.1, FSAR Table 14.1-1 and STS section 3/4.7.1.
8. RG 1.26 - System components were classified in accordance with the draft version of ANS 18.2 issued August 1970. A point-by-point comparison with RG 1.26 quality groups shows no significant differences for the AFW. See FSAR Sections 10.4.7.2.3, 10.4.7.2.4, 3.2.2; Figure 10.4.7-5, Tables 3.2.1-2, 3.2.2-1 and 3.2.2-2.
9. RG 1.29 - See FSAR sections 10.4.7.2.3 and 3.9.2.5.1.
10. RG 1.62 - See FSAR sections 10.4.7.2.2, 10.4.7.2.3, and 10.4.7.2.5.
11. RG 1.102 - See FSAR section 10.4.7.2.2 and 2.4A.
12. RG 1.117 - See FSAR section 10.4.7.2.2 and 3.5.
13. BTP ASB 3-1 and MEB 3-1 - See FSAR section 10.4.7.2.2 and TVA' EN DES Report No. 72-22, and CEB Report No. 76-3.
14. BTP ASB 10-1 - The AFW meets all requirements of this BTP as described in FSAR section 10.4.7 with one exception. Each AFW train cannot supply any combination of steam generators. Diverse means are provided to supply AFW to any steam generator. The steam-driven AFW pump delivers AFW to all four steam generators. Train A of the motor-driven supply delivers AFW to steam generators 1 and 2. Train B of the motor-driven supply delivers AFW to steam generators 3 and 4.

TABLE 10.4.7-6 (Sheet 1)

AFWS

RESPONSES TO SHORT- AND LONG-TERM RECOMMENDATIONS
RESULTING FROM A GENERAL NRC INVESTIGATION OF AFWS

Short-Term

1. Tech Spec time limit on one train out of service.

   Response:

   Technical Specification 3.7.1.2 limits operation with one train out of service to 72 hours.

2. Tech Spec on any single suction valves that can defeat system. Administrative control to lock open and verify position.

   Response:

   Administrative controls exist to lock open common suction valves from the CST. The ERCW system supplies safety grade backup suction.

3. Reevaluate commitments to limit AFW flow for reduction of water hammer effects.

   Response:

   The AFW flow rate will not be limited for any reasons related to the prevention or reduction of water hammer. The Sequoyah steam generator feedwater ring headers have been modified so that water hammer will not be a problem. On automatic start, the AFWS goes to full flow until normal water level is established on the steam generators.

4. Emergency procedure to connect backup water source.

   Response:

   Each auxiliary feedwater pump has its own safety grade instrumentation that will sense low pump suction pressure prior to draining of the normal water source and will automatically align the safety grade backup water source to the pump. Isolation from the normal water source occurs automatically by closure of a check valve in each pump suction line due to back pressure on the valve open alignment of the qualified water source. The qualified water source is essential raw cooling water.

Long-Term

1. Make manual start systems automatic.

   Response:

   The AFWS is fully automatic with manual actuation capability as well.

2. Provide a redundant path where primary and alternate water supplies pass through a single valve.

TABLE 10.4.7-6 (Sheet 2)

AFWS

RESPONSES TO SHORT- AND LONG-TERM RECOMMENDATIONS
RESULTING FROM A GENERAL NRC INVESTIGATION OF AFWS

Response:

Alternate water supplies to the AFW pump suctions do not share the same flow path with any valves in the normal water supply lines.

3. Eliminate dependence of one train of AFW on ac power.

Response:

The turbine-driven AFW pump can run for 4 hours during station blackout using only battery power for control and a dc powered room fan to remove heat from the pump room.

4. Prevent multiple pump damage due to loss of suction resulting from natural phenomena.

Response:

Pump damage is prevented by the automatic transfer to the alternate water source which is essential raw cooling water.

5. Upgrade auto start signal to safety grade.

Response:

The auto start signals for AFW are safety grade.

6. Emergency procedure for operator action for the AFWS in a total ac blackout.

Response:

Operator action for the AFWS in a total ac blackout is covered in Emergency Instructions.

7. Tech Spec AFWS flow verification following maintenance outage.

Response:

Technical Specification 4.7.1.2 requires that each AFW pump be demonstrated operable. (See also the response to item 12).

8. Upgrade auto start signal for AFWS.

Response:

There are three, safety grade, automatic start modes for the AFWS. They are loss of offsite power, safety injection actuation, and low-low steam generator level.

TABLE 10.4.7-6 (Sheet 3)

AFWS

RESPONSES TO SHORT- AND LONG-TERM RECOMMENDATIONS
RESULTING FROM A GENERAL NRC INVESTIGATION OF AFWS

9. Auto actuation of AFWS.

Response:

See response for item 8.

10. Redundant low level indication and alarm in MCR of primary water source.

Response:

There is a level indicator in the main control room for each condensate storage tank. Level alarms for each tank are actuated in the main control room for both "low" and "low-low" level. The "low-low" level is to warn of imminent tank emptying and occurs when sufficient water remains in the tank to allow for operator action in accordance with emergency procedures. In the event that the operator fails to align the AFW pumps to the secondary water source, they will automatically align.

11. 72-Hour pump endurance test.

Response:

The 72-hour recommendation has been reduced to 48 hours following discussion with the NRC staff. TVA is currently reviewing its records to determine if a pump endurance test has been performed. In the event that pump test information is not available, the appropriate tests will be performed to demonstrate the adequacy of the AFWS pumps. (A 48-hour endurance test was successfully performed and the test results were submitted to the NRC by L. M. Mills' letter dated November 4, 1980, to Harold R. Denton.)

12. Flow indication to each steam generator (same as 2.1.7b of NUREG 0578).

Response:

Auxiliary feedwater flow is indicated in the main control room for each of the four steam generators. The transmitters are mounted on four separate, seismically qualified panels and powered from power sources connected to the emergency power system. The cables are in low level signal conduits and are kept separate from all power cables. In addition, the total flow from the turbine-driven auxiliary feedwater pump is indicated in the main control room. The auxiliary feedwater flow instrument channels are powered from the emergency buses consistent with the diversity requirements of the AFWS.

13. Tech Spec for two-train systems which require valve realignment during surveillance testing.

Response:

The Sequoyah Nuclear Plant AFWS has three individual trains; one steam driven and two

Table 10.4.7-6 (Sheet 4)

AFWS

RESPONSE TO SHORT-AND LONG-TERM RECOMMENDATIONS
RESULTING FROM A GENERAL NRC INVESTIGATION OF AFWS

motor driven. These trains are characterized by parallel injection lines and open suction lines. The injection lines join together downstream of any control valve. In testing a given train, the control valves for that train only will be closed during testing. At power these valves are closed. For maintenance, only the control valves on the affected train would be disabled. For pump maintenance, the suction isolation valve for that pump would be closed. There are no common suction valves that must be closed for maintenance or testing.

Table 10.4.8-1 (Sheet 1)

FAILURE ANALYSIS, STEAM GENERATOR BLOWDOWN SYSTEM

Failure	Consequences	Action
(1) Rupture of blowdown line between steam generator and isolation valve inside containment.	Hot water under pressure partially flashes to steam. Pressure in lower compartment increases and vapor passes through ice beds. Water level in affected steam generator increases (swell). Radioactivity present in steam generator remains inside containment.	When containment pressure reaches the HI setpoint, SIS is initiated, reactor is automatically tripped, and containment isolation valves close. Main feedwater lines isolate and auxiliary feedwater pumps start. Blowdown isolation valves are automatically closed. If the break happens to be in a blowdown line between the isolation valve and the containment penetration, automatic closure of the isolation valves initiated by the containment pressure signal terminates the release. If the break is ahead of the isolation valve, when the fault is identified, auxiliary feedwater to the affected steam generator is isolated, and that steam generator is allowed to boil and drain itself dry.

Table 10.4.8-1 (Sheet 2)

FAILURE ANALYSIS, STEAM GENERATOR BLOWDOWN SYSTEM

Failure	Consequences	Action
(2) Rupture of blowdown line from outside containment to flash tank or heat exchangers.	Hot water under pressure escapes into main steam valve vault outside the building or inside the turbine building and partially flashes to steam. Some of the radioactive material in the blowdown will escape directly to atmosphere or be carried out with turbine building ventilation exhaust, depending on where the rupture occurs.	When the leak is discovered, the operator closes all blowdown isolation valves and then opens them one at a time to locate the leak. The unit is shutdown if necessary to repair the leak.
(3) Rupture of blowdown line downstream of flash tank or heat exchangers.	Water under pressure escapes into the turbine building and is collected by liquid waste system.	Same as (2)
(4) Failure of blowdown regulating valve.	Flow will increase to maximum value allowed by manual throttling valves.	When the failure is discovered, the blowdown isolation valves will be closed so that the regulating valve can be repaired.

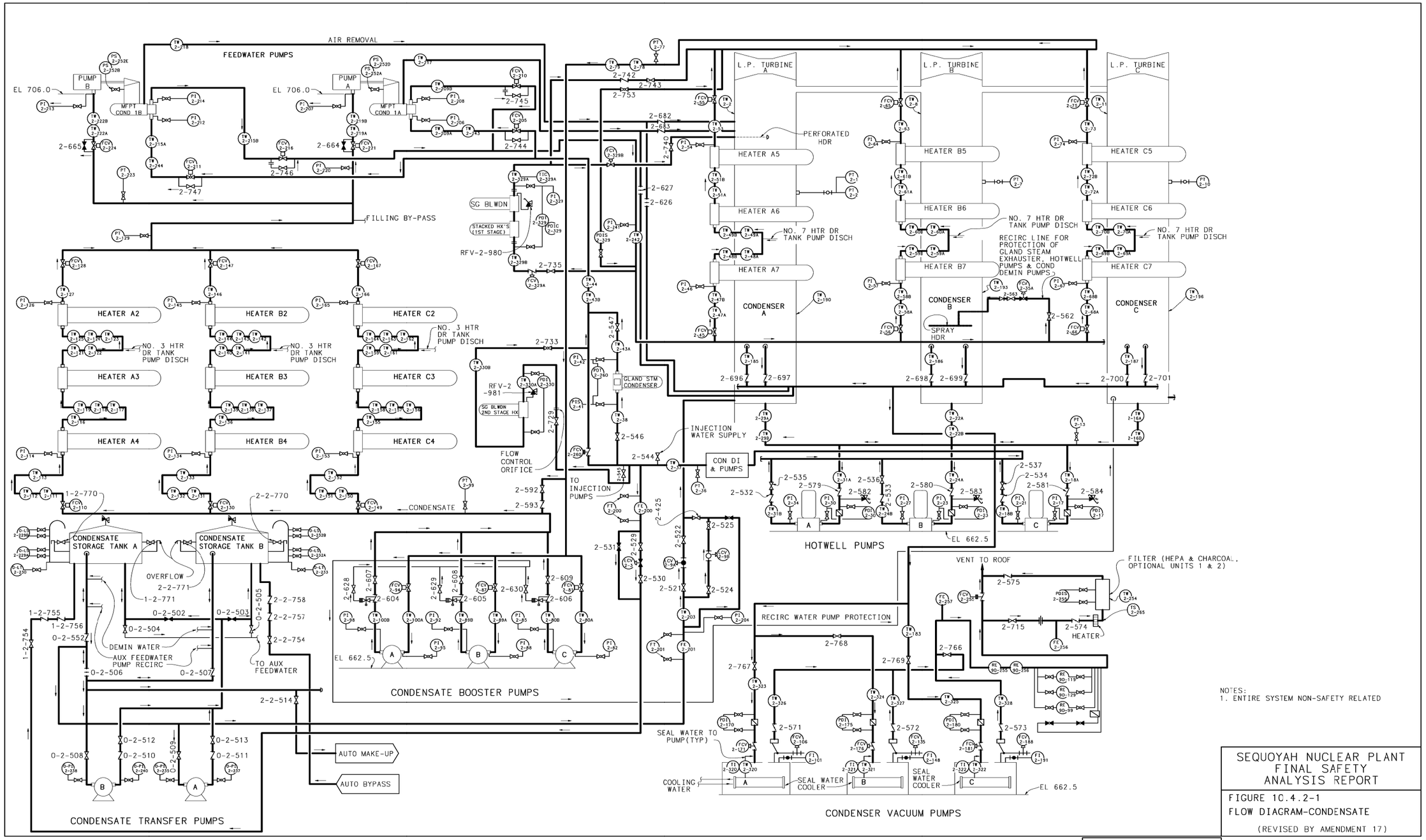
AIR REMOVAL
FEEDWATER PUMPS
PUMP B
PUMP A
EL 706.0
MFPT COND 1B
MFPT COND 1A
FILLING BY-PASS
SG BLWDN
STACKED HX'S (1ST STAGE)
RFV-2-980
RFV-2-981
SG BLWDN 2ND STAGE HX
FLOW CONTROL ORIFICE
HEATER A2
HEATER A3
HEATER A4
HEATER B2
HEATER B3
HEATER B4
HEATER C2
HEATER C3
HEATER C4
NO. 3 HTR DR TANK PUMP DISCH
CONDENSATE
CONDENSATE STORAGE TANK A
CONDENSATE STORAGE TANK B
OVERFLOW
DEMIN WATER
AUX FEEDWATER PUMP RECIRC
TO AUX FEEDWATER
CONDENSATE TRANSFER PUMPS
AUTO MAKE-UP
AUTO BYPASS
CONDENSATE BOOSTER PUMPS
EL 662.5
GLAND STM CONDENSER
TO INJECTION PUMPS
INJECTION WATER SUPPLY
CON DI & PUMPS
L.P. TURBINE A
L.P. TURBINE B
L.P. TURBINE C
PERFORATED HDR
HEATER A5
HEATER A6
HEATER A7
HEATER B5
HEATER B6
HEATER B7
HEATER C5
HEATER C6
HEATER C7
NO. 7 HTR DR TANK PUMP DISCH
RECIRC LINE FOR PROTECTION OF GLAND STEAM EXHAUSTER, HOTWELL PUMPS & COND DEMIN PUMPS
CONDENSER A
CONDENSER B
CONDENSER C
SPRAY HDR
HOTWELL PUMPS
VENT TO ROOF
FILTER (HEPA & CHARCOAL, OPTIONAL UNITS 1 & 2)
HEATER
RECIRC WATER PUMP PROTECTION
SEAL WATER TO PUMP(TYP)
COOLING WATER
SEAL WATER COOLER
CONDENSER VACUUM PUMPS
NOTES:
1. ENTIRE SYSTEM NON-SAFETY RELATED
SEQUOYAH NUCLEAR PLANT
FINAL SAFETY
ANALYSIS REPORT
FIGURE 1C.4.2-1
FLOW DIAGRAM-CONDENSATE
(REVISED BY AMENDMENT 17)
CAD MAINTAINED DRAWING

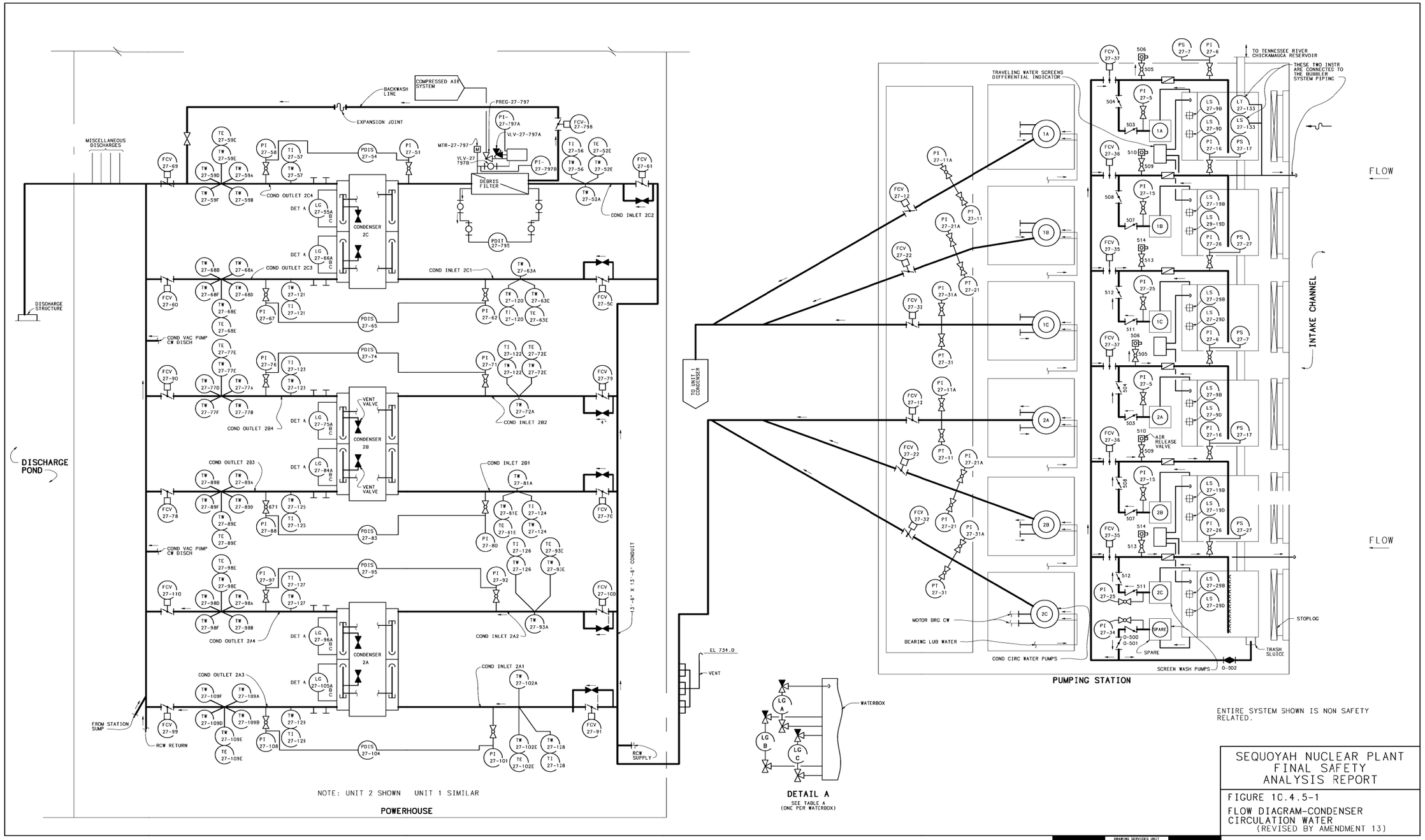

ENTIRE SYSTEM SHOWN IS NON SAFETY RELATED.

SEQUOYAH NUCLEAR PLANT
FINAL SAFETY
ANALYSIS REPORT

FIGURE 1C.4.5-1

FLOW DIAGRAM-CONDENSER CIRCULATION WATER
(REVISED BY AMENDMENT 13)

DRAWING SERVICES UNIT
PROCAD MAINTAINED DRAWING
THIS CONFIGURATION CONTROL DRAWING IS MAINTAINED BY THE SQN CAD UNIT AND IS PART OF THE TVA PROCADAM DATABASE.
COMPUTER GRAPHICS

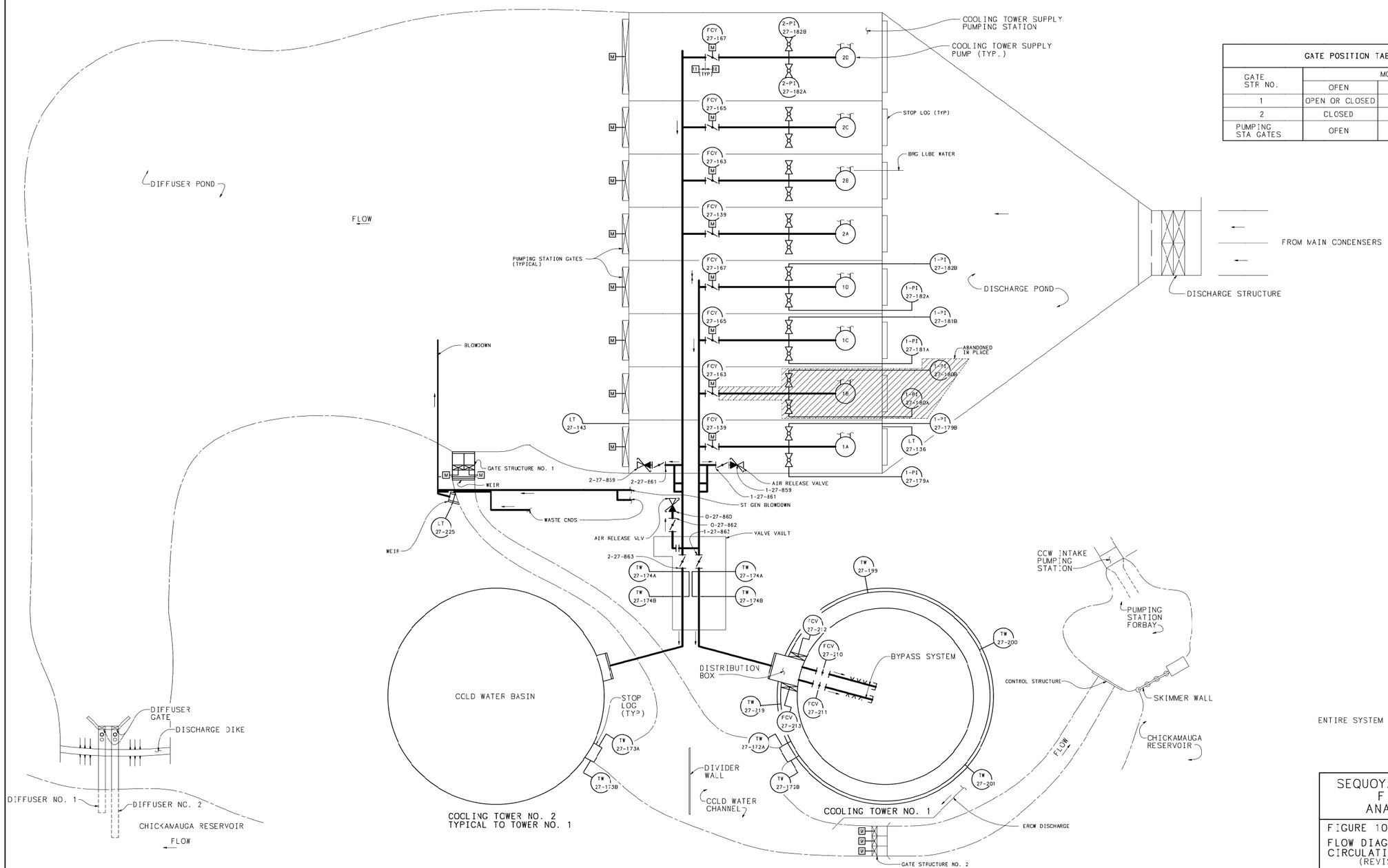

GATE POSITION TABLE			
GATE STR NO.	MODES		
	OPEN	HELPER	CLOSED
1	OPEN OR CLOSED	OPEN	CLOSED
2	CLOSED	CLOSED	OPEN
PUMPING STA GATES	OPEN	CLOSED	CLOSED

ENTIRE SYSTEM SHOWN IS NON-SAFETY RELATED

SEQUOYAH NUCLEAR PLANT
FINAL SAFETY
ANALYSIS REPORT

FIGURE 10.4.5-2

FLOW DIAGRAM-CONDENSER CIRCULATING WATER
(REVISED BY AMENDMENT 21)

CAD MAINTAINED DRAWING

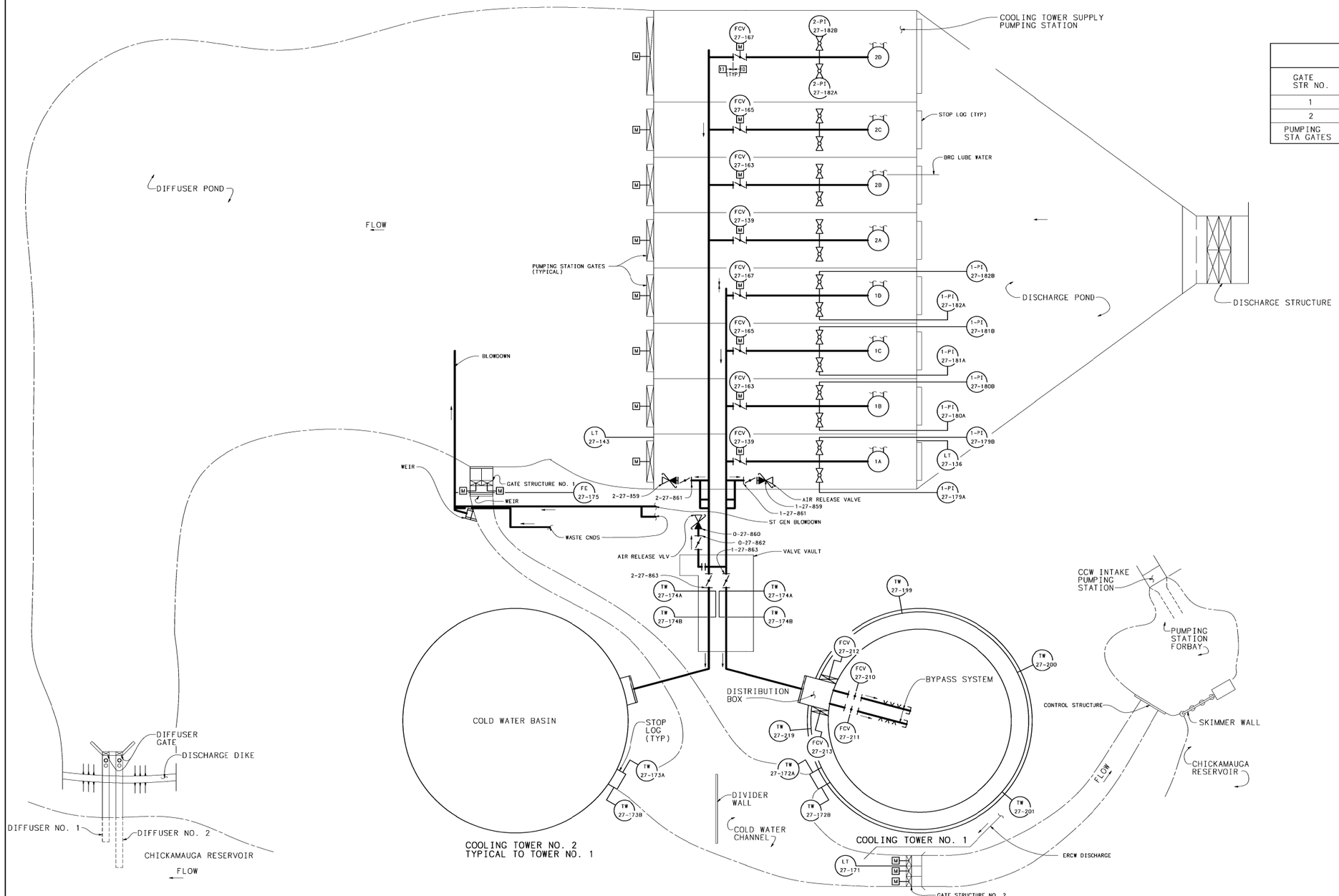

GATE POSITION TABLE			
GATE STR NO.	MODES		
	OPEN	HELPER	CLOSED
1	CLOSED	OPEN	CLOSED
2	CLOSED	CLOSED	OPEN
PUMPING STA GATES	OPEN	CLOSED	CLOSED

SEQUOYAH NUCLEAR PLANT
FINAL SAFETY
ANALYSIS REPORT

FIGURE 10.4.5-3

FLOW DIAGRAM-CONDENSER CIRCULATING WATER
(REVISED BY AMENDMENT 13)

DRAWING SERVICES UNIT
PROCAD MAINTAINED DRAWING
THIS CONFIGURATION CONTROL DRAWING IS MAINTAINED BY THE SQN CAD UNIT AND IS PART OF THE TVA PROCADAM DATABASE.
COMPUTER GRAPHICS

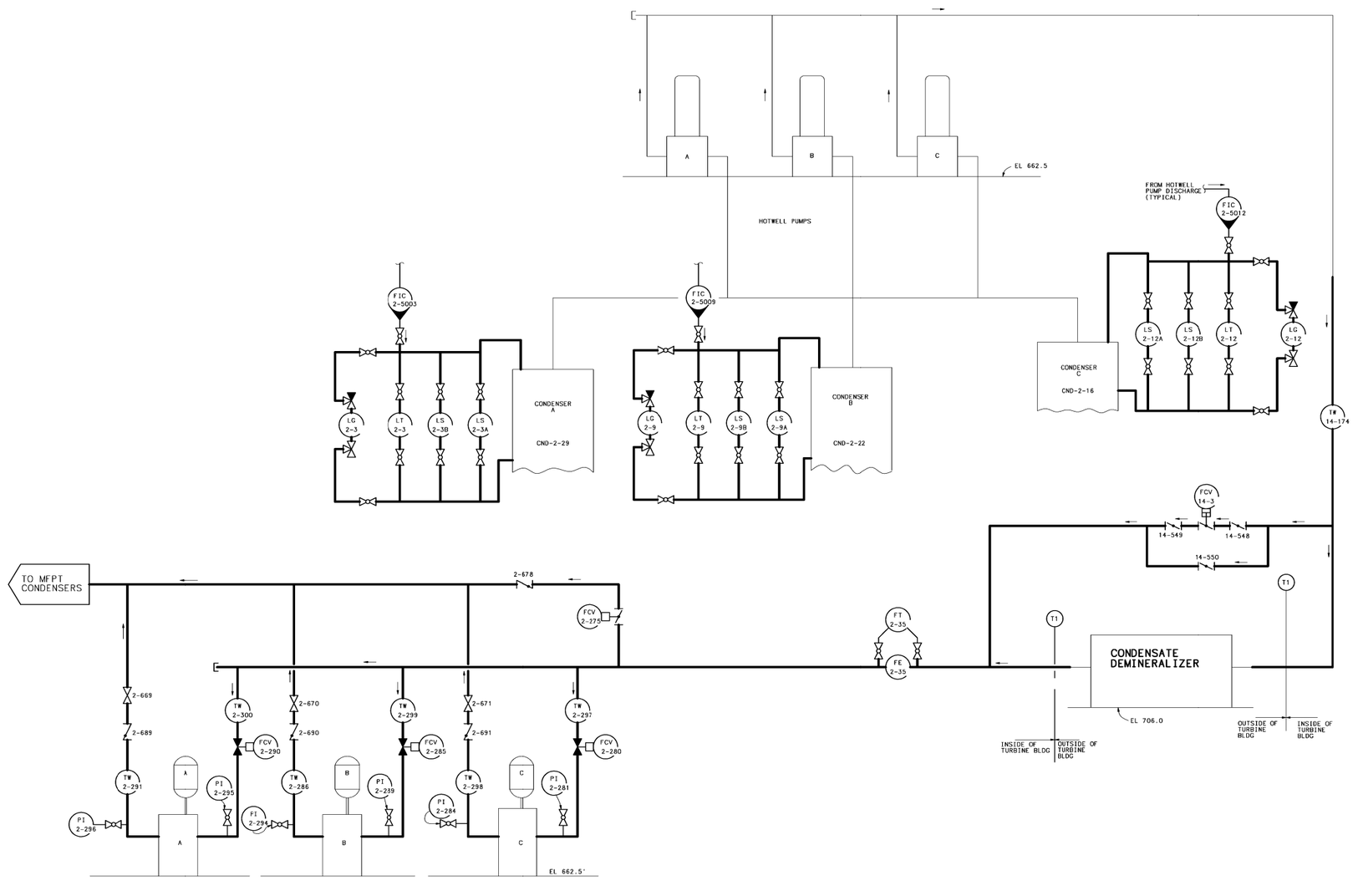

ENTIRE SYSTEM SHOWN IS NON SAFETY RELATED.

SEQUOYAH NUCLEAR PLANT
FINAL SAFETY
ANALYSIS REPORT

FIGURE 1C.4.7-1
FLOW DIAGRAM-CONDENSATE

(REVISED BY AMENDMENT 13)

DRAWING SERVICES UNIT
PROCAD MAINTAINED DRAWING
THIS CONFIGURATION CONTROL DRAWING IS MAINTAINED BY THE SQN CAD UNIT AND IS PART OF THE TVA PROCADAM DATABASE.
COMPUTER GRAPHICS

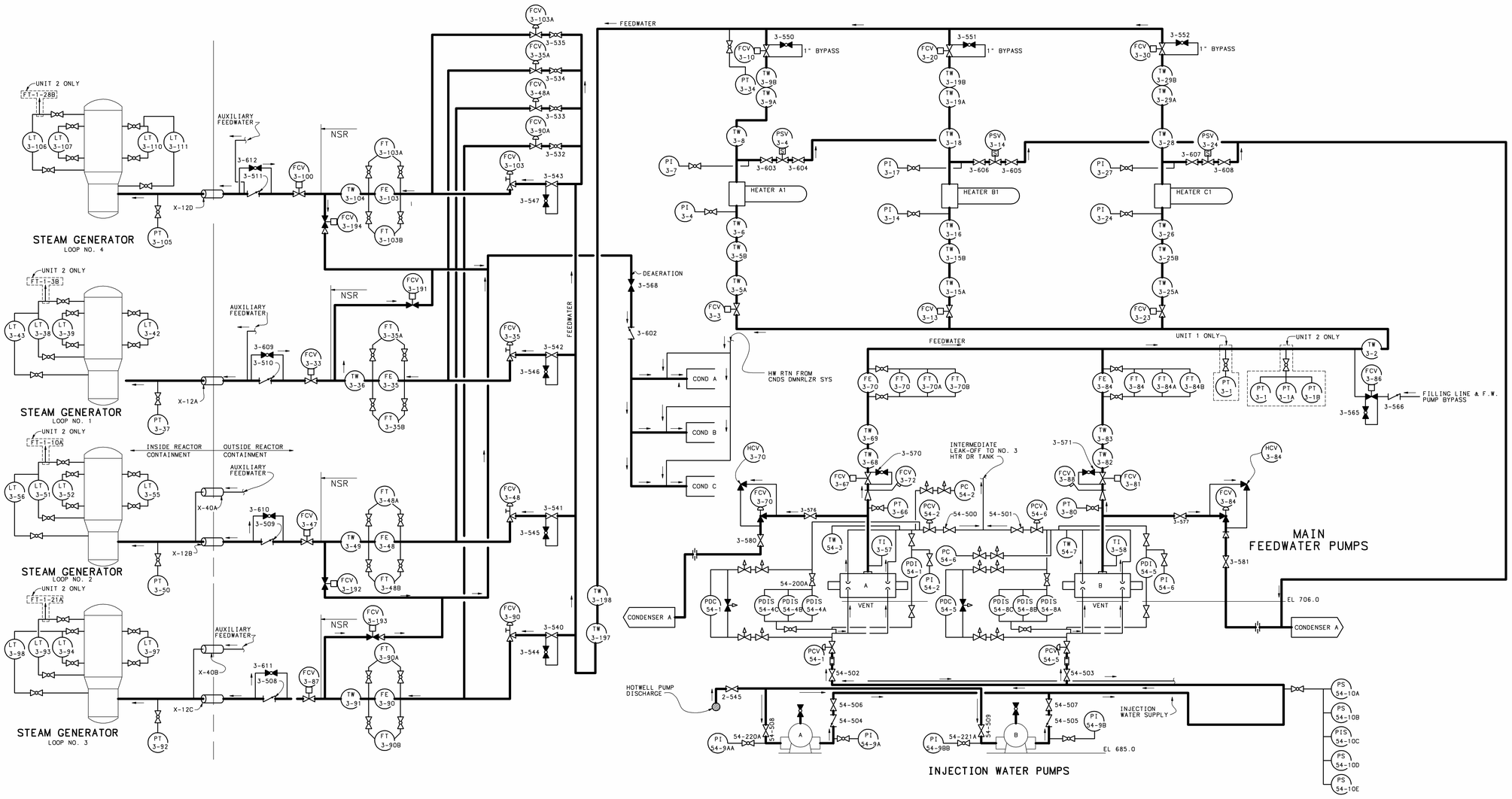

NOTES:
1. UNIT 1 SHOWN, UNIT 2 SIMILAR.
2. NSR DEFINES NON-SAFETY RELATED BOUNDARY.

SEQUOYAH NUCLEAR PLANT
FINAL SAFETY
ANALYSIS REPORT

FIGURE 10.4.7-2
FLOW DIAGRAM-FEEDWATER

(REVISED BY AMENDMENT 22)

CAD MAINTAINED DRAWING

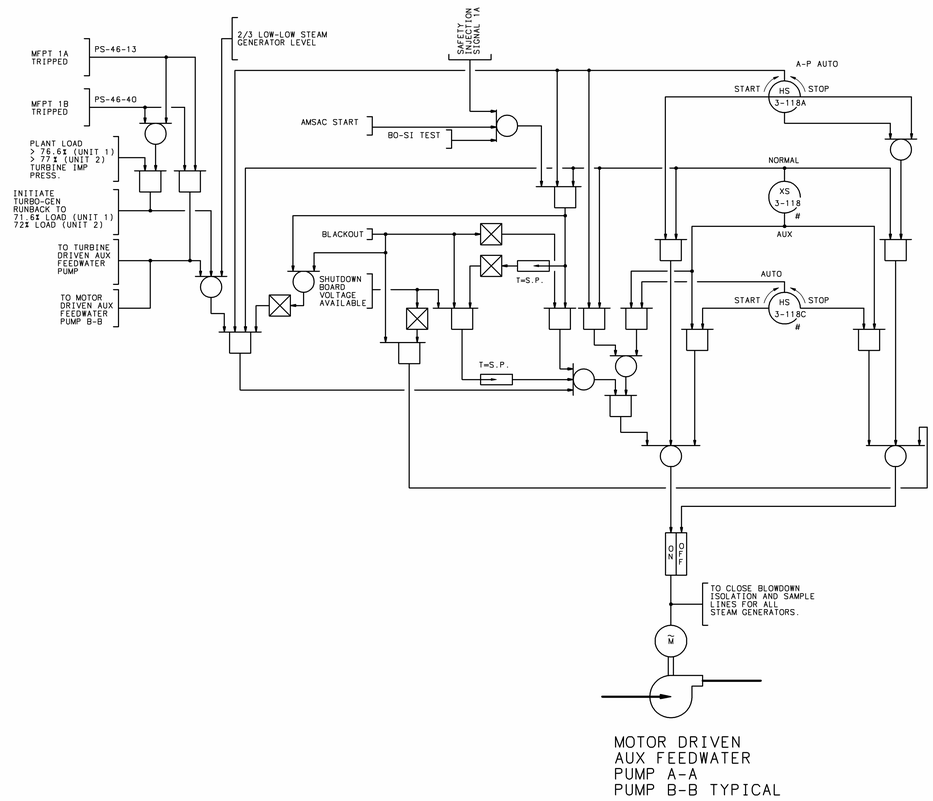

SEQUOYAH NUCLEAR PLANT
FINAL SAFETY
ANALYSIS REPORT

FIGURE 10.4.7-3
MOTOR DRIVEN AUX FEEDWATER
PUMP LOGIC
(REVISED BY AMENDMENT 22)

CAD MAINTAINED DRAWING

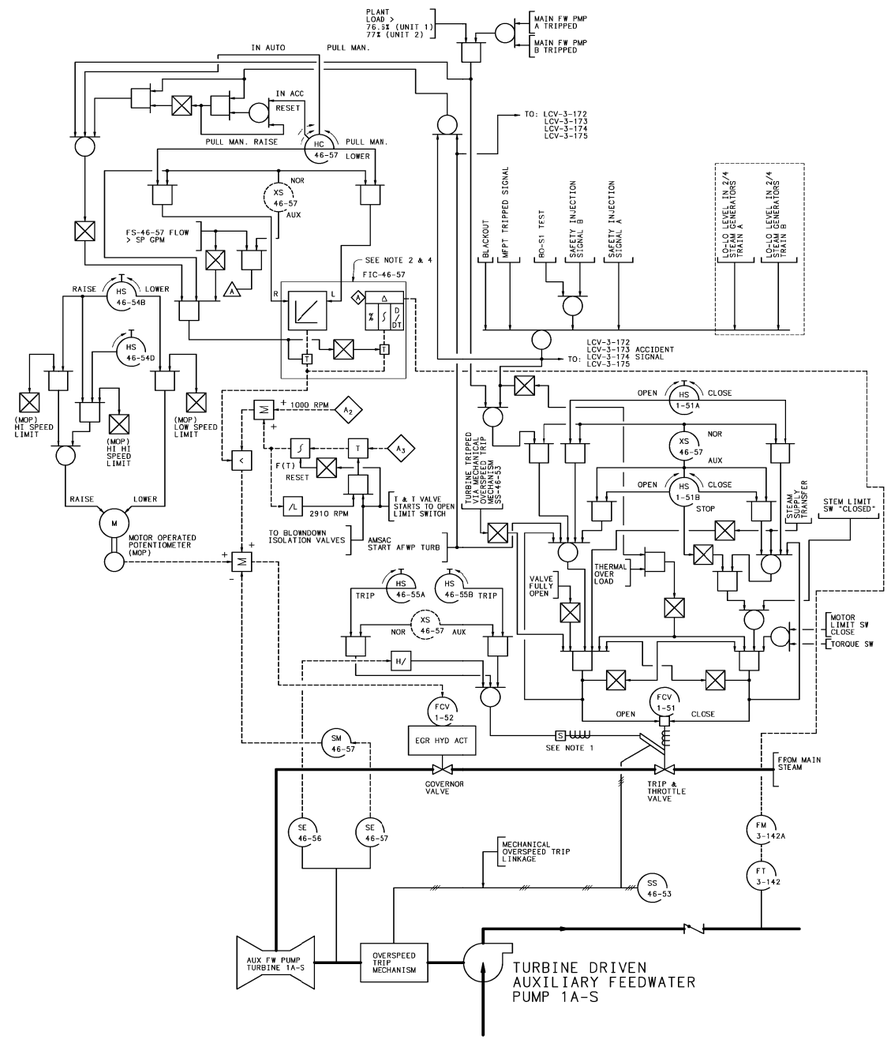

NOTES:

1. SOLENOID TRIP OPERATES AT 110% SPEED AND RESETS AUTOMATICALLY. MECHANICAL OVERSPEED OPERATES AT 125% SPEED AND MUST BE RESET MANUALLY.
2. MANUAL CONTROL WHEN IN THE AUXILIARY CONTROL MODE IS ACCOMPLISHED AT THE CONTROLLER.
3. ACCIDENT SIGNAL TO TRAIN A VALVES IS TR-A WITH TR-B BUFFERED. TR B VALVES WILL BE TR-B WITH TR-A BUFFERED.
4. MANUAL PUSHBUTTON ON FRONT FACE OF CONTROLLER TAKES PRECEDENCE OVER REMOTE AUTOMATIC SIGNAL. MCR INDICATING LIGHTS STATUS ACTUAL CONTROLLER MODE (AUTO OR MANUAL).

SEQUOYAH NUCLEAR PLANT
FINAL SAFETY
ANALYSIS REPORT

FIGURE 1C.4.7-4
TURBINE DRIVEN AUX FEEDWATER PUMP LOGIC
(REVISED BY AMENDMENT 19)

CAD MAINTAINED DRAWING

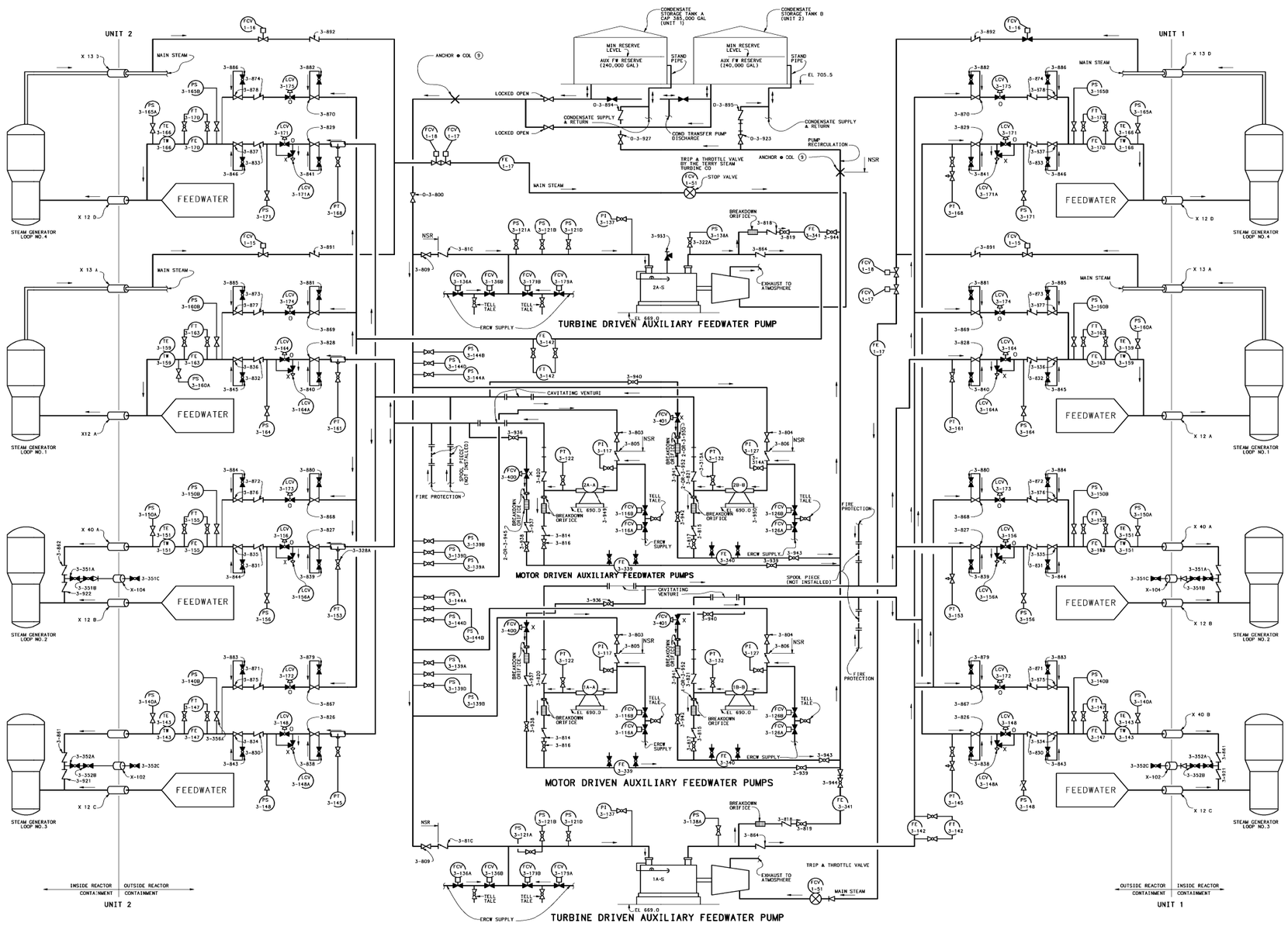

NSR DEFINES NON-SAFETY RELATED BOUNDARY
O VALVE FAILS OPEN
X VALVE FAILS CLOSED

SEQUOYAH NUCLEAR PLANT
FINAL SAFETY
ANALYSIS REPORT

FIGURE 1C.4.7-5
FLOW DIAGRAM
AUXILIARY FEEDWATER
(REVISED BY AMENDMENT 19)

CAD MAINTAINED DRAWING

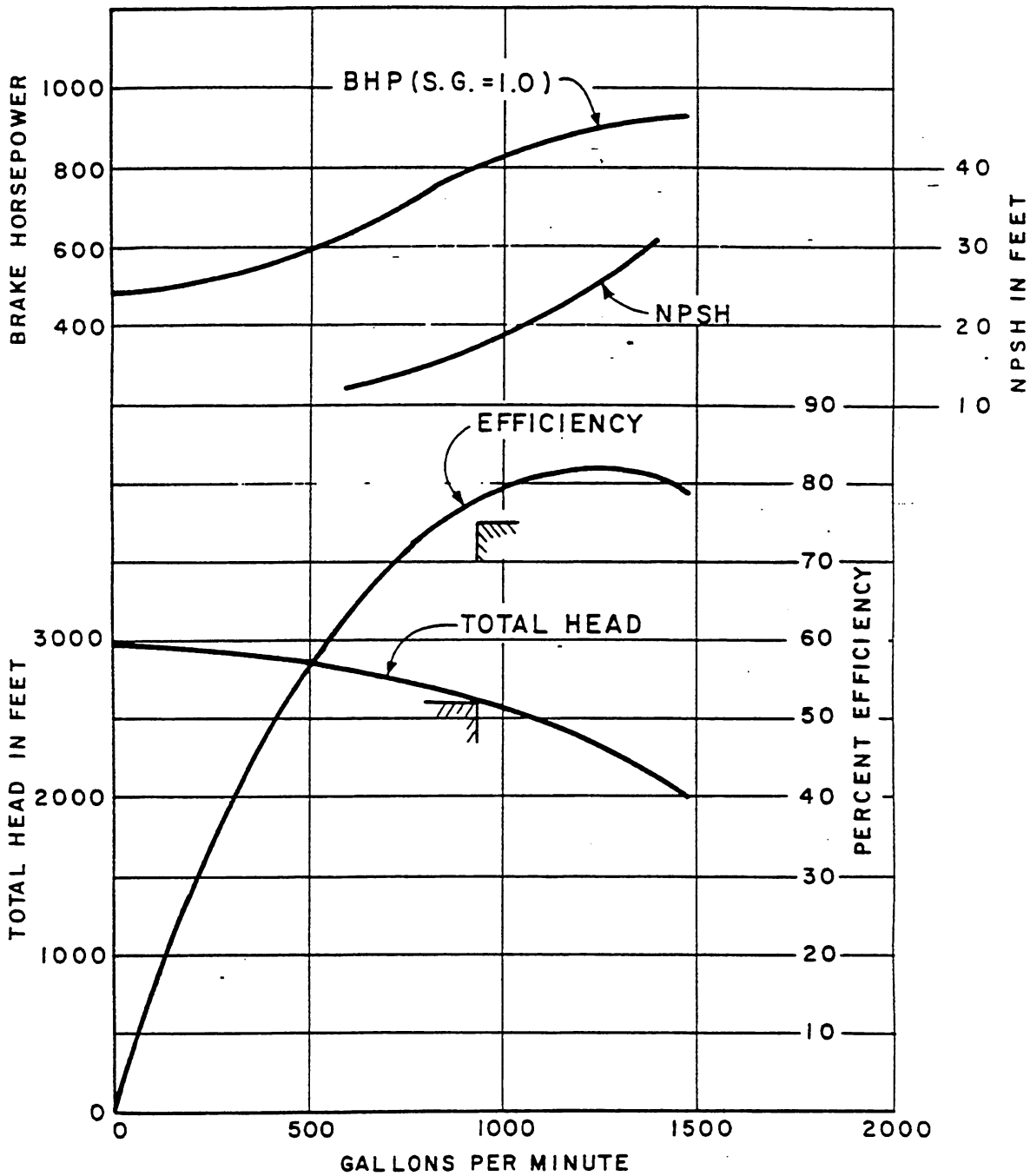

COMPOSITE OF TWO TEST CURVES

Figure 10.4.7-6 Pump Characteristics, Turbine - Driven Auxiliary Feedwater

Revised by Amendment 13

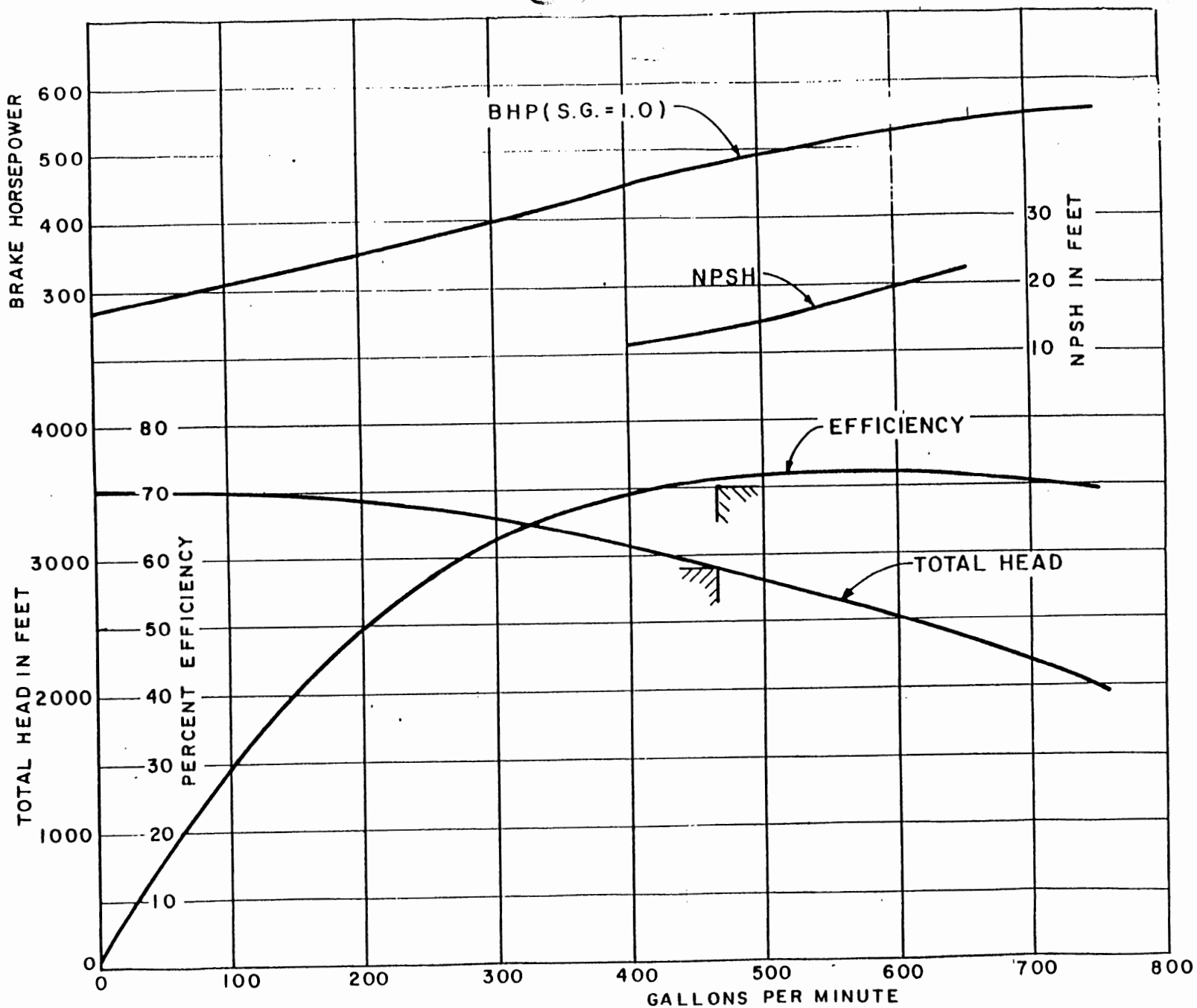

Composite of four test curves

Figure 10.4.7-7 Pump Characteristics, Motor-Driven Auxiliary Feedwater

Revised by Amendment 13

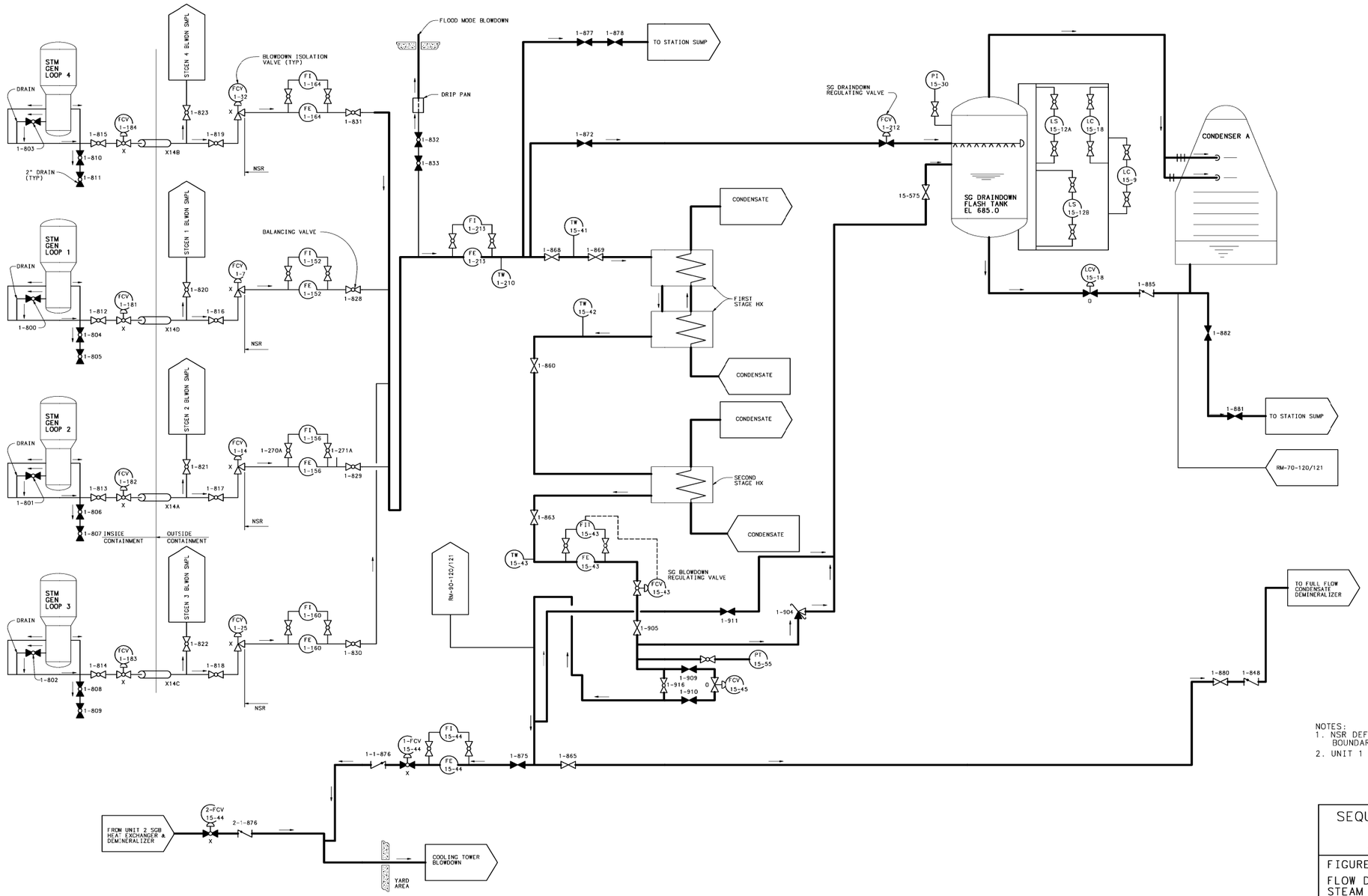

NOTES:
1. NSR DEFINES NON-SAFETY RELATED BOUNDARIES.
2. UNIT 1 SHOWN, UNIT 2 SIMILAR.

SEQUOYAH NUCLEAR PLANT
FINAL SAFETY
ANALYSIS REPORT

FIGURE 10.4.8-1

FLOW DIAGRAM
STEAM GENERATOR BLOWDOWN SYSTEM
(REVISED BY AMENDMENT 15)

DRAWING SERVICES UNIT
PROCAD MAINTAINED DRAWING
THIS CONFIGURATION CONTROL DRAWING IS MAINTAINED BY THE SQN CAD UNIT AND IS NOW PART OF THE TVA PROCADAM DATABASE.
COMPUTER GRAPHICS

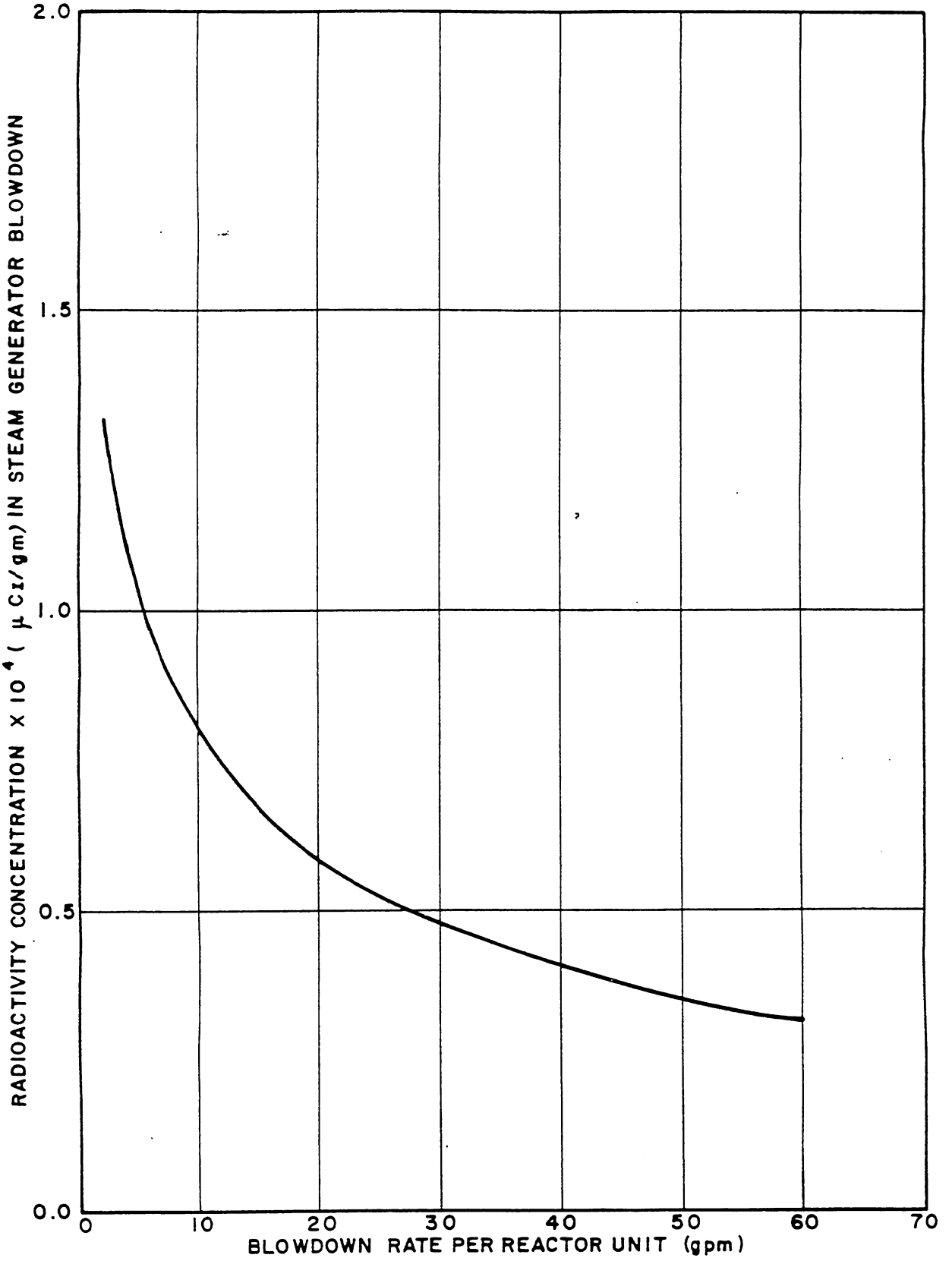

SEQUOYAH NUCLEAR PLANT
FINAL SAFETY
ANALYSIS REPORT

RADIOACTIVITY CONCENTRATIONS
IN THE SECONDARY SYSTEM
AS A FUNCTION OF STEAM
GENERATOR BLOWDOWN RATE

Figure 10.4.8-2

Revised by Amendment 13

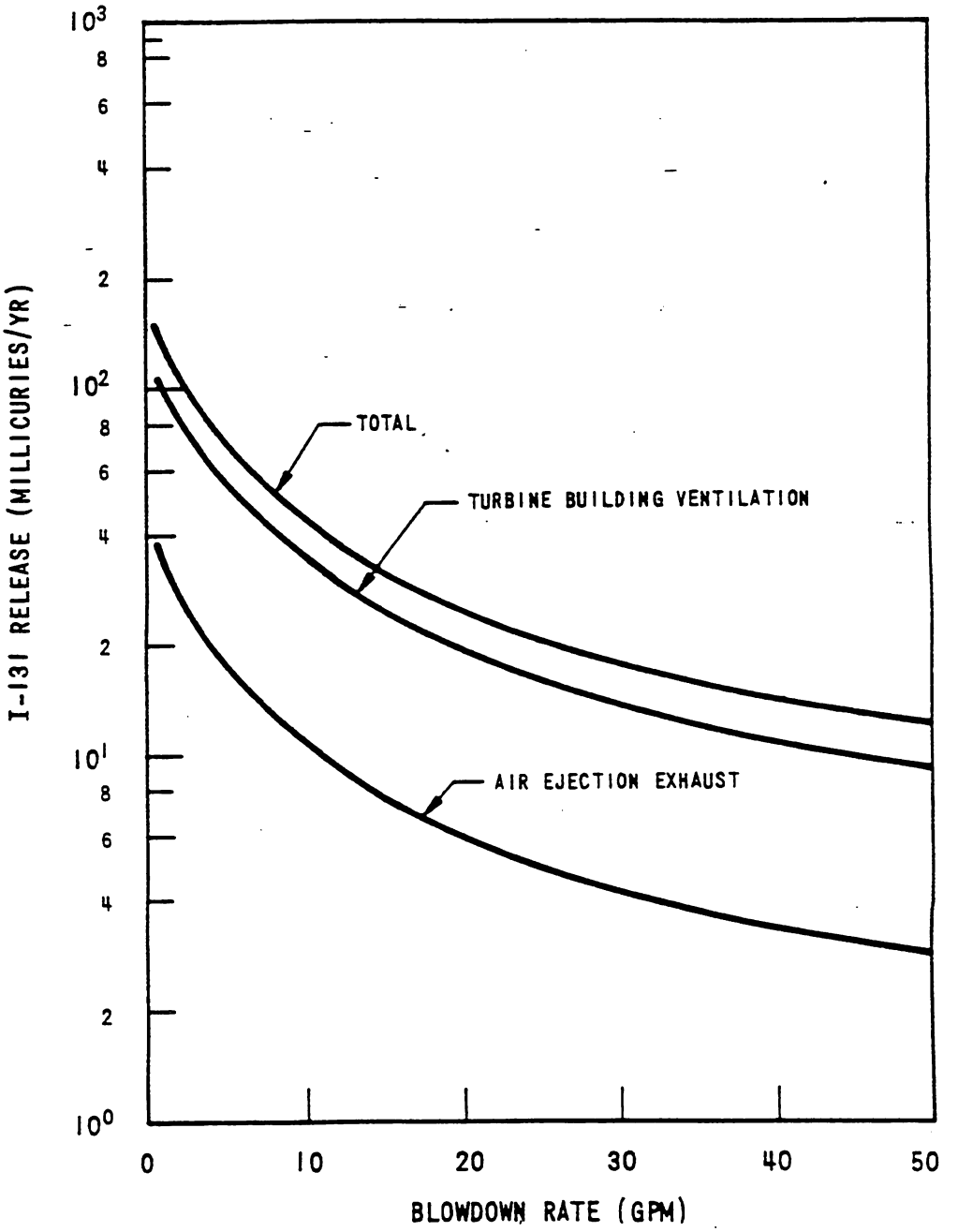

Figure 10.4.8-3 **Effect of Blowdown Rate on I-131 Release**

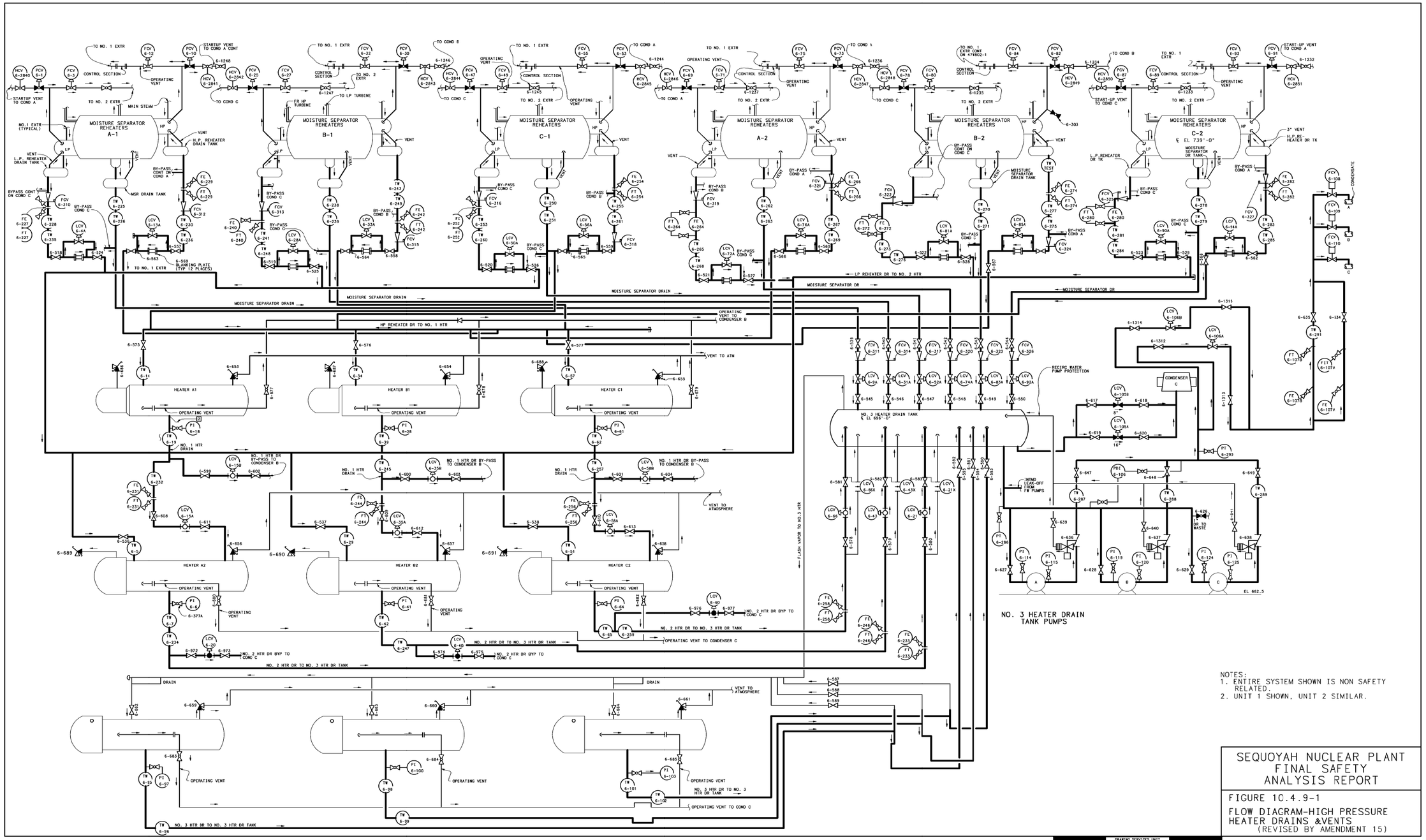

NOTES:
1. ENTIRE SYSTEM SHOWN IS NON SAFETY RELATED.
2. UNIT 1 SHOWN, UNIT 2 SIMILAR.

SEQUOYAH NUCLEAR PLANT
FINAL SAFETY
ANALYSIS REPORT

FIGURE 10.4.9-1

FLOW DIAGRAM-HIGH PRESSURE HEATER DRAINS &VENTS
(REVISED BY AMENDMENT 15)

DRAWING SERVICES UNIT
PROCAD MAINTAINED DRAWING
THIS CONFIGURATION CONTROL DRAWING IS MAINTAINED BY THE SQN CAD UNIT AND IS PART OF THE TVA PROCADAM DATABASE.
COMPUTER GRAPHICS

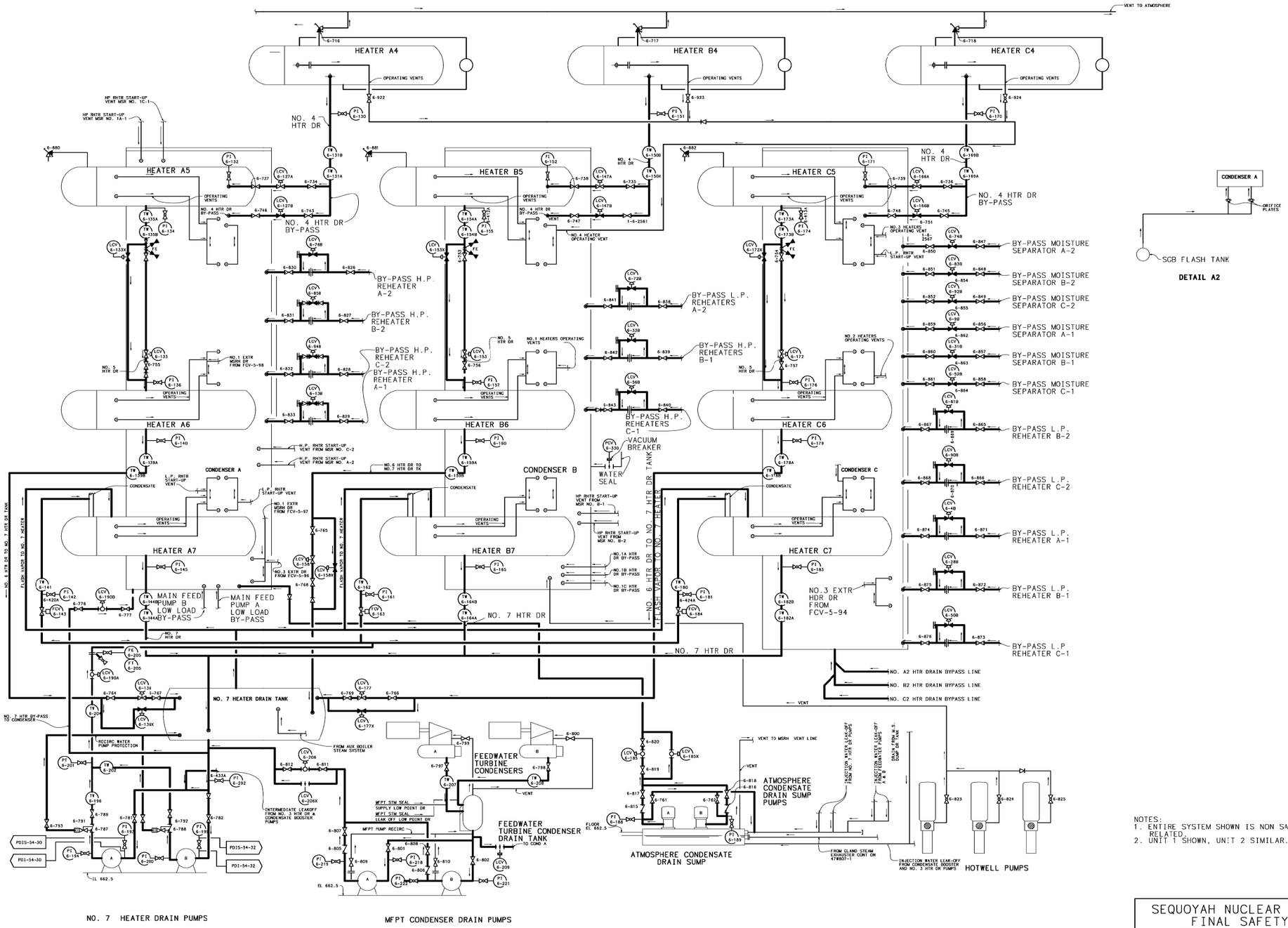

NOTES:
1. ENTIRE SYSTEM SHOWN IS NON SAFETY RELATED.
2. UNIT 1 SHOWN, UNIT 2 SIMILAR.

SEQUOYAH NUCLEAR PLANT
FINAL SAFETY
ANALYSIS REPORT

FIGURE 10.4.9-2

FLOW DIAGRAM LOW PRESSURE HEATER DRAINS & VENT
(REVISED BY AMENDMENT 17)

CAD MAINTAINED DRAWING