2.0 ENVIRONMENTAL IMPACT OF THE PROPOSED FACILITY

The Sequoyah Nuclear Plant will interact with the environment during its construction and connection with TVA's power transmission system and the subsequent operation of the plant. Construction of the plant is resulting in a physical alteration of a portion of the site area and results in some erosion, noise, dust, and smoke during the continuing phases of construction. Connection of the plant to TVA's power transmission system will result in easement restriction on new transmission line rights of way, minor construction effects, and limited impacts on aesthetics.

It is TVA's policy to keep the discharge of all wastes from its facilities at the lowest practicable level by using the best and highest degree of waste treatment available under existing technology, within reasonable economic limits. In keeping with this policy, TVA did evaluate, from both a performance and an economic standpoint, alternative methods for reducing the impact on the environment of the discharges from the Sequoyah Nuclear Plant. As a minimum, these alternatives would result in discharges which would meet the applicable environmental limits. Nevertheless, operation of the plant will result in minor releases of chemicals, radioactive liquids and radioactive gases and in the release of large quantities of heat to the environment. These impacts have been evaluated considering the environment of the area as described in Section 1.2, Environment of the Area.

The interactions and impacts discussed in sections 2.1 through 2.9 have been examined for their potential effects on land, water, and air uses, including industrial operations, transportation, farming, forestry, recreation, wildlife preserves, waterways, government

reservations, and water supplies. No adverse impacts on these uses other than those identified in the following sections are anticipated and no other commitment of use of land, water, and air is expected to occur.

2.1 Transportation of Nuclear Fuel and Radioactive Wastes

About 100 tons of nuclear fuel will be shipped annually to and from the plant, and packaged radioactive waste totaling about 400 tons will be shipped annually from the plant to AEC-licensed disposal areas. These two types of radioactive materials will be shipped in accordance with applicable Federal and state regulations. Packaging and transport of radioactive materials are regulated at the Federal level by both the Atomic Energy Commission (AEC) and the Department of Transportation (DOT). In addition, certain aspects, such as limitations on gross weight of trucks, are regulated by the states.

The protection of the public from radiation during the shipment of nuclear fuel and radioactive waste depends on the limitations on the contents, the package design, the external radiation levels as well as the method, routing, and safeguards to be followed in transport. These factors are discussed below in regard to the shipment of new fuel, spent fuel, and radioactive wastes.

1. New fuel shipment - Fuel elements for the plant require an annual commitment of about 200 tons of natural uranium in the form of U_3O_8 for each reactor. However, some of this uranium may come from reprocessed spent fuel.

New fuel for the plant is made of slightly enriched uranium dioxide pellets which have been sintered and compacted to form very dense pellets having high strength and high melting points. The pellets are 0.3225 inch in diameter by 0.6 inch long and are stacked inside zircaloy tubing with space left at the end of the tubing to provide for collection of gas generated during the fission process. These tubes are welded shut at both ends, forming a fuel rod, and are

subjected to rigorous quality control to ensure their integrity. These rods are included in a 17 rod by 17 rod array to form a fuel assembly.

TVA will apply for a special nuclear material license to provide for receipt, possession, and storage of fuel elements before the initial core of the reactor is shipped to the plant. In addition, all fuel assemblies will be delivered to the TVA plant site in accordance with shipping procedures and arrangements authorized for use by the fuel fabricator under special nuclear material license in accordance with AEC regulations.[1] Fuel will be shipped in shipping containers which will have been demonstrated to provide safety from criticality under both normal and accident conditions.

(1) Method and frequency of shipment - Westinghouse is the fabricator of the initial core fuel assemblies and is responsible for shipment of these fuel assemblies to the reactor site. Westinghouse presently has fuel fabrication plants at Cheswick, Pennsylvania, and Columbia, South Carolina. This fuel will most likely be shipped by truck trailers in quantities up to seven shipping containers per load, each containing two fuel assemblies, thereby providing a maximum of fourteen fuel assemblies per truck shipment. About ten such shipments by truck will be received at the plant annually (about 14 shipments in the initial core for each unit).

(a) Shipping routes - It is assumed that Westinghouse will ship the initial core assemblies by truck from its fabrication plant in Columbia, South Carolina, to the plant.

The major population centers encountered over an assumed 375-mile route include the following:

City	1970 Population	Density Persons/mile^2
1. Columbia, SC, by way of I-26 to	113,542	6,343
2. Spartanburg, SC, by way of I-26 to	44,546	2,837
3. Asheville, NC, by way of I-40 to	57,681	2,658
4. Knoxville, TN, by way of I-40 to	124,587	2,267
5. Harriman, TN, by way of US-27 to	8,734	4,159
6. Sequoyah Nuclear Plant		

(b) Shipment activity - Relatively low levels of radiation are emitted from unirradiated new fuel assemblies. Because the type of radiation emitted by uranium is reduced by even thin layers of metal and the self-shielding properties of the fuel reduce the cumulative effect, no additional gamma or beta shielding is required in shipping packages for new fuel. The following properties of the fabricated new fuel limit the radiological impact on the environment to negligible levels:

- No radioactive fission products.
- No radioactive gases.
- High melting point.
- Insoluble solid.
- Zircaloy clad.
- Fuel assemblies will not disruptively react or decompose under expected or postulated thermal conditions.

(2) Environmental effects - The population exposure resulting from the normal shipments of new fuel has been evaluated for the people who reside on either side of the transport route. The radiation dose as a function of distance from a shipping

container drops off quite rapidly. Because the container will be stationary for only brief intervals and because of the low activity level of new fuel, the total exposure to an individual living along the transport route will be an insignificant fraction of the exposure from natural background radiation.

(a) Normal shipments - Because of the estimated low dose rates due to new fuel at the time of shipment (< 0.1mrem/h at 6 feet from the container), the only exposure from routine shipments of new fuel is to persons along the transport route during the brief period such a shipment is in direct view and to the individual truck drivers driving the trucks. For example, a member of the general public who spends 3 minutes at an average distance of 6 feet from the container would receive a dose not exceeding 0.005 mrem. If 10 persons were so exposed per shipment, the total annual dose for the 10 shipments of new fuel would be about 0.0006 man-rem.

Based on an estimated radiation level in the cab of the truck of 0.1 mrem/h, exposure to transportation personnel is estimated to be less than 1 mrem per shipment. A total dose to all drivers for a given year, assuming two drivers per vehicle, would not exceed 0.02 man-rem.

It is concluded that there are no environmental risks from radiation associated with the normal shipment of new fuel.

(b) Accident occurrences - The problems which might result from a transportation accident equivalent to that specified in 10 CFR Part 71 would consist of the physical damage

of the impact and the interference associated with having to send the fuel back to the fabricator for inspection. A subsequent determination would then be made to determine whether there had been damage which would affect the operation of the fuel in the reactor. There would be no release of radioactive materials and no increase in radiation dose rates over those from normal shipment. Thus, it is concluded that there would be no significant environmental risks from radiation resulting from an accident involving a shipment of new fuel.

2. Spent fuel shipment - Spent fuel removed from the two reactors during the annual refuelings is expected to contain, on a weight basis, in excess of 99 percent of the fission products formed inside the fuel and is temporarily stored in the spent fuel pool at the plant. The water in the pool serves as both a radiation shield and coolant while the short-lived fission products decay. At the end of a storage period of about 3 to 4 months, the spent fuel is loaded into ruggedly built shielded containers for shipment to a fuel reprocessing plant. There the spent fuel is chemically reprocessed to recover its unused fuel content, uranium and plutonium, for future use. It is possible to ship spent fuel by rail, truck, or barge.

(1) Method and frequency of shipment - All the equipment and services for spent fuel transportation and reprocessing are to be provided to TVA by contract. This includes transport vehicles, special shielded containers, services associated with container loading, and all transport arrangements. Even though TVA contracts these services, it will specify the scope, terms, scheduling, transportation, and reporting of shipments as appropriate and in

accordance with AEC and the Department of Transportation regulations. Presently, there are fuel reprocessing plants in operation or under construction in Morris, Illinois; West Valley, New York; and Barnwell, South Carolina.

There are several possible shipping methods for irradiated fuel. These range from truck shipments with cask capacities from 0.4 to 1.2 metric tons of uranium to rail shipments with cask capacities from 3.2 to 5.0 metric tons of uranium at a time. Water transportation of spent fuel with about 5 metric tons of uranium could also be used.

Truck shipment of spent fuel from Sequoyah would require about 130 legal-weight shipments (73,280 pounds) over a period of about 4 to 6 months each year or about 65 shipments if a 90,000-pound truck load limit is permitted.

Rail shipments originating from the plant would require about 13 shipments annually. The shipments would be in a special rail cask holding about 10 fuel assemblies. If necessary, fuel assemblies which have identified clad perforations will be sealed in special containers before being loaded into the spent fuel cask.

Since it will not be necessary to ship spent fuel from Sequoyah to a reprocessing plant until approximately 1977, TVA has not entered at this time into a contract for shipment of spent fuel from this plant. Even though the exact mode of transportation and other details related to spent fuel shipments have not yet been defined, rail shipments have been assumed for purposes of routing and estimating the environmental effects.

(a) Spent Fuel Shipping Routes - It is assumed that the spent fuel from Sequoyah Nuclear Plant would be shipped about 375 miles by rail to the closest fuel reprocessing plant which is at Barnwell, South Carolina. The major population centers encountered are:

City	1970 Population	Density Persons/mile^2
1. Sequoyah Nuclear Plant - by way of Southern to		
2. Chattanooga, TN - by way of Southern to	119,083	2,117
3. Atlanta, GA - by way of Southern to	496,973	3,779
4. Seneca, SC - by way of Southern to	6,382	1,877
5. Anderson, SC - by way of Southern to	27,556	2,551
6. Greenwood, SC - by way of Southern to	21,069	2,926
7. Barnwell, SC (AGNS site)	4,439	562

(b) Shipment activity - Fuel elements which are removed from the reactor will be essentially unchanged in outward appearance. However, in addition to a portion of the original useful uranium fuel, these fuel elements will contain some reactor-generated plutonium and an accumulation of fission products. This irradiated spent fuel is subsequently shipped to a reprocessing plant for recovery of its unused fuel content (uranium and plutonium).

The estimated inventory of fission product activity and decay heat of the Sequoyah spent fuel at the time of shipment is given in Table 2.1-1. It should be noted that effectively all of this contained radioactivity is tightly bound within the insoluble, high-melting-point uranium dioxide pellets. Therefore, even if the shipping cask should be breached in an accident and the fuel cladding should

be ruptured, there is still no ready mechanism for dispersing any substantial fraction of the total contained radioactivity.

(2) Environmental effects - Prior to shipment, the fuel will be allowed to radioactively decay for about 3 to 4 months. Then all noble gases with the exception of krypton-85 will have decayed to insignificant levels and iodine-131 will have decayed to low levels. Further, the rate of decay heat generation by the spent fuel will have decreased. Of the iodine isotopes, only iodine-131 is present in significant amounts. Fission products other than a portion of the noble gases and iodine are strongly held within the uranium dioxide fuel pellets. Hence, only noble gases and iodine which have escaped from the fuel could escape through a penetration in fuel clad to the shipping cask cavity.

(a) Normal shipment - The principal normal environmental effect from spent fuel shipments would be the direct radiation dose from the fuel as it moves from the reactor to the reprocessing plant. The population exposure resulting from normal shipments of radioactive materials has been calculated based on the assumption that there would be about 100 people per square mile living in the area within 1/2 mile of the route. An actual population dose may be computed by multiplying this calculated dose by the ratio of the actual population density to 100 persons per square mile. The assumption of 100 persons per square mile was utilized since while population data for population centers is available, the actual population within one-half mile on either side of the transport route, both within and outside cities is not readily available. Also, 100 persons per square mile is somewhat conservative when compared to the statewide population

densities of the three states involved. It has also been assumed that the shipments are made at the maximum permitted level for a closed vehicle of 10 mrem/h at 6 feet from the nearest accessible surface.[2] Figures D-1 and D-2 of Appendix D show the location of the shipping container relative to people living adjacent to the transport route and the rapid decrease in radiation exposures as a function of distance from the shipping container. The calculation does not include reductions of exposures due to shielding from structures, topographic features, or other radiation-attenuating material.

Assuming a maximum of 13 shipments per year, each moving at only 20 mi/h, the maximum exposure received by any individual residing 100 feet from the center of the transport route would be about 0.004 mrem per year. The average exposure for these 13 shipments to an individual living along the transport route would be about 0.0002 mrem per year. On the basis of 100 people per square mile living within 1/2 mile on either side of the transport route, these people would receive an annual dose of about 0.008 man-rem per year. Train brakemen or a member of the general public might spend a few minutes in the vicinity of the car, at an average distance of 6 feet, for an average exposure of about 0.5 mrem per shipment. With 10 different brakemen and 10 members of the general public so involved along the route, the total dose for 13 shipments during the year is estimated to be about 0.13 man-rem.

Since the exposure to the people who reside along the route and to each person who might come within 6 feet of the railcar for a short period is only 0.00014 and 0.4 percent respectively of the exposure these same people receive from natural

background radiation, it is concluded that no adverse environmental effects will result from the normal transportation of spent fuel from Sequoyah to the fuel reprocessing plant.

(b) Accident occurrences - The principal potential environmental effects from an accident are those from direct radiation resulting from increased radiation levels, from gaseous release of noble gases and iodine, and from release of contaminated coolant.

Evaluation of exposure from direct radiation assumes that the radiation exposure rate is the maximum permitted by regulations, 1,000 mrem/h at 3 feet from the surface of the container, and that people have surrounded the container beginning at about 50 feet from the container.[3] Figure D-3 of Appendix D shows the exposure rate for accident conditions as a function of distance from the container. The exposure rate at 50 feet would be about 17 mrem/h. Assuming a tightly packed crowd, there would be 154 people in the front row, and as shown on figure D-1, these people would provide shielding such that people in subsequent rows would receive greatly reduced radiation exposure. If a person remained in the front row for 2 hours, his exposure would be about 34 mrem. Further, the increased radiation level would most likely be from only a localized area on the container, and thus only a small number of people in even the front row of a crowd would be exposed to these radiation levels.

Calculations for a probable shipping container indicate that there would be no gaseous releases unless there were a substantial quantity of decay heat in the shipping

container and some additional external heat such as from a fire. Thus, it is assumed that the heated air currents surrounding the container would carry any released fission gases to a height of 10 meters before they are dispersed in the environment. Assuming a person stands in the plume during the entire accident, the resulting whole-body exposure would be 2 mrem, the skin dose would be about 86 mrem, and the thyroid dose would be about 5 rem. For the noble gas release, assuming an average population density of 100 people per square mile, the total whole-body population dose from the accident would be 0.07 man-rem. TVA considers the average population to be a realistic number for analyzing transportation accidents because of the small fraction of the total distance travelled in high population density areas and because accidents in such areas generally occur at lower speeds and thus could be expected to be less severe.

The contaminated coolant in the shipping container is basically low specific activity material. In the event the coolant were drained from the container in an accident, emergency plans for containing the contaminated liquid and preventing a radiation hazard to the public and the environment will be initiated.

The principal environmental risk resulting from an accident would be the potential whole-body radiation exposure due to direct radiation and the noble gases released and potential thyroid dose due to the iodines released. Because of the dose reduction with distance and the mitigating effect of proposed emergency actions, it can be concluded that the whole-body radiation exposure to the public will be negligible. Because of the unlikely combination of circumstances which must be present to result in a significant

dose due to the release of iodine, the probability of significant doses due to this occurrence is considered extremely small.

3. Radioactive waste shipment - The radioactive wastes to be shipped for disposal will be concentrates from the waste evaporator, spent demineralizer resins, spent filter elements, chemical draintank effluents, miscellaneous dry solid wastes, irradiated or contaminated equipment components, and possibly tritiated water.

The radwaste packaging facility at Sequoyah for evaporator bottoms will be equipped to use standard DOT17H[4] drums. The waste evaporator bottoms and chemical draintank effluents will be solidified before shipment to a disposal site regulated by AEC and the state in which the site is located.

(1) Method and frequency of shipment - Waste evaporator concentrates and spent demineralizer resins are collected in the plant and may be stored for decay of short-lived isotopes. After about 60 to 120 days' decay, the only significant radioactive isotopes present will be long-lived corrosion products such as cobalt-60.

Based on the estimated quantities and activities, there will be about 10 total shipments of waste evaporator concentrates and chemical draintank effluents each year. Waste evaporator concentrates are drummed and placed in an approved container for shipment to an AEC-licensed disposal area. The resins may be shipped in specially constructed shielded containers similar to the LL-60-150 cask planned to be used for shipping the higher activity radioactive material from the Browns Ferry Nuclear Plant. The casks will be decontaminated if necessary at the disposal area and returned to the plant.

There will be about 20 shipments of radioactive spent filter elements per year. These elements will be shipped in appropriate containers.

Appropriately packaged compressible wastes will generally be shipped to the disposal area in van-type trucks. There will be approximately 10 shipments per year of such compressible wastes.

Radioactive equipment components will generally have low volumes. No shipments are expected during the first years of operation. Radioactive components will be stored in the spent fuel pit until sufficient quantities are available for a shipment

In the event tritiated water is disposed of offsite it will be shipped in tank trucks licensed for low specific activity liquids. Beginning between 7 to 12 years after initial operation, about 50,000 gallons of tritiated water may be shipped annually. This would require use of about 13 tank truck loads with each containing about 35 Ci of tritium.

(a) Shipping routes - It is assumed that radwaste shipments from Sequoyah would be by truck about 375 miles to the closest AEC-approved disposal area at Barnwell, South Carolina. The major population centers encountered over the assumed route are:

City	1970 Population	Density Persons/mile^2
1. Sequoyah Plant site by way of US-27 to		
2. Chattanooga, TN, by way of I-75 to	119,082	2,117
3. Atlanta, GA, by way of I-20 to	496,973	3,779
4. Augusta, GA, by way of US-278 to	59,864	3,938
5. Barnwell, SC	4,439	562

(b) Shipment activity - The estimated activity and quantities of the radioactive wastes to be shipped from Sequoyah are summarized as follows:

Type Waste	Annual Amount	Expected Activity at Shipment	Number of Drums	Curies/ Container	Number of Shipments Annually
Waste evaporator concentrates	1,200 ft^3	0.3 Ci/ft^3	350	1.35	8
Chemical Drain-tank Effluents	320 ft^3	0.004 Ci/ft^3	80	0.016	2
Spent demineralizer resins	260 ft^3	0.5 Ci/ft^3	170	0.75	10
Spent filter elements	400 ft^3	25.0 Ci/ft^3	200	50	20
Miscellaneous dry solids	5,000 ft^3	0.002 Ci/ft^3	700	0.02	10
Radioactive equipment components	**	--	--	--	--
Tritiated water	50,000 gal.***	2.5 μCi/ml	****	35	13

*All shipments made in appropriate container so that dose rate does not exceed 10 mrem/h at 6 feet for closed transport vehicle shipment.

**Low volume, no shipments during first years of operation.

***No shipments assumed for first 7-12 years operation, then quantity shown may be shipped.

****About 13-3700 gallon tank truck shipments.

(2) Environmental effects - The environmental effects for these radioactive wastes for normal shipment during accident occurrences are evaluated for the potential exposure to transport workers and the general public. It is assumed for purposes of calculating the environmental effects that radioactive wastes are shipped by truck at the regulatory radiation level limit of 10 mrem/h at 6 feet from the nearest surface.[2] It is also assumed that the exposure rate to transportation personnel is not greater than the regulatory level limit of 2 mrem/h in occupied positions of vehicles.[2]

(a) Normal shipment - The estimated 50 shipments of solid waste containers between the reactor site and a disposal location will be done periodically. Regulations pertaining to such shipments, packaging, and shipping safeguards will be adhered to in all cases.

Under normal conditions, the truck driver might receive as much as 15 mrem per shipment. A total dose to all drivers for a given year, assuming two drivers per vehicle, would not exceed 1.35 man-rem.

Because of the low dose rates permitted at the time of shipment (10 mrem/h at 6 feet from the nearest surface), the only exposure to people from routine shipments is for the brief period such a shipment is in direct view. For example, a member of the general public who spends 3 minutes at an average distance of 6 feet from the vehicle would receive a dose not exceeding 0.5 mrem. If 10 persons were so exposed per shipment, the total annual dose for the 50 shipments of solid radioactive waste would be about 0.250 man-rem.

Figure D-1 of Appendix D shows the location of the shipping container relative to people living adjacent to the transport route that was used to calculate radiation exposures. The radiation dose as a function of distance from a stationary shipping container is shown in figure D-2 of the same appendix. On the basis of 100 people per square mile living along the assumed 375-mile transport route between Sequoyah and the waste burial facility at Barnwell, South Carolina, these people would receive an annual dose of about 0.015 man-rem per year. A summary of these effects is given in Table 2.1-2.

The shipments of compressible wastes would not contribute significant radiation exposure to the public. The low energy radiation from tritium will be shielded by the shipping vessel (tank truck) and will not be a source of radiation exposure during transport.

Since the exposures to the people who reside along the route, to each truck driver per shipment, and to each person who might come within 6 feet of the vehicle for a short period are only 0.0003, 11, and 0.4 percent, respectively, of the exposure these same people receive from natural background radiation and since compressible waste and tritiated water shipments contribute no radiation exposure, it is concluded that no adverse environmental effects will result from the transportation of radioactive waste from Sequoyah to the disposal facilities.

(b) Accident occurrences - Although transportation accidents involving radioactive material from the Sequoyah plant may be expected to occur about once every 22 years

based on the national truck accident statistics for 1969,[5] it is highly unlikely that a shipment of solid radioactive waste will be involved in a severe accident during the life of the plant. Data on accidents involving TVA trucks during a recent 10-year period show a rate of 4.06 accidents per million miles travelled. Based on these data and using the estimated annual shipment miles of radioactive waste for the Sequoyah plant, truck accidents may be expected to occur about once every 17 years. However, about 90 percent of the accidents included in the TVA data are of a minor nature, and since radioactive shipments will be made in accordance with the stringent conditions imposed by AEC and DOT procedures and regulations, the probability of an accident of a severity which would result in release of significant quantities of radioactive materials to the environment would not be likely during the life of the plant.

If a shipment of compressible wastes in appropriate containers becomes involved in a severe accident, some release of waste might occur, but the specific activity of the waste will be so low that the exposure of personnel or the public would not be expected to be significant. Waste evaporator bottoms and spent demineralizer resins will be shipped in Type A or Type B packages as appropriate.[6] The allowable contents of Type A packages and the probability of release from a Type B package in a severe accident are sufficiently small that, considering the form of the waste and the very low probability of the severe accident occurrences, the likelihood of significant exposure would be extremely small.

Consideration has been given to the radiological impact of the shipment of tritiated water. The low energy radiation from tritium will be shielded by the shipping container and will not be a source of radiation exposure during normal transportation. Calculations have been performed for an accidental release of the entire contents of a 3,700-gallon container of tritiated water with a tritium concentration of 2.5 uCi/cc. A conservative upper limit for the resulting radiation dose is computed by assuming that all of the tritiated water evaporates into the atmosphere and is blown directly to an individual who remains at the maximum dose point for the entire period of release to the atmosphere. With these assumptions the maximum whole-body dose is computed to be 440 mrem. This dose decreases rapidly with distance, as shown in figure D-5, and at 600 feet is about 23 mrem. Assuming a uniform average population density, the population dose within 50 miles is less than 0.10 man-rem.

4. Shipping safeguards - The protection of the public from radiation during shipment of nuclear fuel and radioactive waste is achieved by a combination of limitations on the contents of the package according to the quantities and types of radioactivity, the package design, and the external radiation levels. In addition to these shipping safeguards, transportation accident procedures will provide for rapid and orderly use of personnel and equipment in the event an accident occurs in the shipment of radioactive materials by TVA.

The Department of Transportation (DOT) has regulatory responsibility for safety in the transport of radioactive materials by all modes of transport in interstate or foreign commerce (rail, road,

air, and water), except postal shipments.[7] Those shipments not in interstate or foreign commerce are subject to control by a state agency in most cases. The Atomic Energy Commission (AEC) also has responsibility for safety in the possession and use, including transport, of radioactive materials.[8] Both Title 10 and Title 49 of the Code of Federal Regulations set forth the limitations and classifications of the contents, design, and external radiation levels of transport packages.

(1) Governing regulations - This section identifies and summarizes the governing regulations affecting the transport of nuclear fuel and radioactive material. The major aspects of package design and the technical bases of the regulations and the control of the radiation emitted from individual packages are also discussed. In addition, the external radiation levels permitted for low specific activity (LSA) are listed.

Package classification depends on the type, form, and quantity of radioactive material being shipped in the individual container. Small quantities and certain materials of low specific activity are exempted from specification packaging, marking, and labeling when transported on a sole-use vehicle. All other types and quantities of radioactive materials are divided into two broad classes as either "special form" or "normal form." "Special form" radioactive materials means those which, if released from a package, might present some direct radiation exposure but would present little hazard due to radiotoxicity and little possibility of contamination. This may be the result of inherent properties of the material (such as metals or alloys) or acquired characteristics (such as through encapsulation). "Normal form"

materials which do not meet these criteria are classified into one of seven transport groups and listed in a table of individual radionuclides.[9]

Varying quantities of special form and normal form radioactive materials are specified for Type A packaging, larger quantities for Type B packaging, and in excess of Type B quantities for "large quantity" radioactive materials. The Type A packaging standards are for normal conditions of transport. Type B and large quantity packaging standards are for accident conditions. The large quantity standards, in addition to considering both normal and hypothetical accident test conditions, must take into account other factors such as radioactive decay heat produced by the contents. Fissile radioactive materials also require consideration of the potential for accidental criticality.

Low specific activity packages must not have any significant removable surface contamination, and the external radiation levels must not exceed the following dose rates when transported in a sole-use vehicle:

(a) 1,000 mrem/h at 3 feet from the external surface of the package (closed transport vehicle only);

(b) 200 mrem/h at any point on the external surface of the car or vehicle (closed transport vehicle only);

(c) 10 mrem/h at 6 feet from the surface of the car or vehicle; and

(d) 2 mrem/h in any normally occupied position in the car or vehicle.

The shipment of radioactive material from Sequoyah will be in full accordance with these and other regulations governing such shipments.

(2) Package design - The following discussion relates the new fuel, spent fuel, and radwaste container designs to AEC and DOT regulations for both normal and accident conditions. Radioactive material packaging is evaluated in light of these conditions to assure that packages have the requisite integrity to be safely transported.

(a) New fuel container description and licensing - Westinghouse is the new fuel fabricator for the initial core fuel assemblies. An AEC special nuclear material license[10] authorizes Westinghouse to deliver special nuclear material to a carrier for transport. Authorization to transport new fuel assemblies has also been obtained by Westinghouse from the Department of Transportation under Special Permit No. 5450.

New fuel assemblies are enclosed in polyethylene wrappers and placed in metal containers which support the fuel assemblies along the entire length during transportation. This container also provides necessary impact protection to meet the hypothetical accident test requirements of the AEC and DOT regulations.[11,12] The metal container is gasketed and bolted shut and has provisions for pressurization and humidity control. The characteristics of a typical new fuel shipping container are given below.

- All metal reinforced cylindrical outer shell divided longitudinally into two parts
- Reinforced steel beam fuel assembly supports
- Capacity of two fuel assemblies
- Weights

  Empty - about 3,000 lb

  Loaded - about 6,150 lb

- Type B packaging requirements met
- Package design meets requirements for Fissile Class II and III shipments

(b) Spent fuel container description and licensing - Spent fuel shipping casks generally have heavy gauge stainless steel inside and outside shells separated by some dense shielding material, such as lead or depleted uranium.

Normal shipping conditions require that the package be able to withstand temperatures ranging from -40°F to 130°F and to withstand the normal vibrations, shocks, and moisture that could be expected during normal transport.

In addition, casks must withstand specified accident conditions with the release of no radioactivity other than slightly contaminated cask coolant and no more than 1,000 curies of radioactive noble gases. The cask design accident conditions include a 30-foot free fall onto a completely unyielding surface, followed by a 40-inch drop onto a 6-inch diameter metal pin, followed by 30 minutes in fire at a temperature of at least 1,475°F, followed by 8 hours' immersion under at least 3 feet of water. Appendix E of this statement indicates how these 10 CFR Part 71 accident conditions compare to conditions the container might experience as a result of a transportation accident.

It should be noted that there is a wide margin of safety in container designs. For example, the General Electric IF-300 spent fuel shipping cask which will be used at Browns Ferry and may be used at Sequoyah is designed with energy-absorbing fins which absorb the total impact of a 30-foot free fall onto an

essentially unyielding surface with only outer fin deformation.[13] As a result of these energy-absorbing fins, there is a wide margin between the damage that would be experienced by the cask in absorbing the energy of the 30-foot free fall and that which would be required to breach the container. It is estimated that a significant container breach would require from five to ten times the energy which the cask absorbs in the 30-foot free fall. Thus, in the unlikely event that the cask does experience conditions as severe as those imposed by the 10 CFR Part 71 requirements, no container breach is expected.

The accident conditions are judged to be representative of conditions at least as severe as those which would be experienced by containers in transport accidents. Since the tests are applied to the containers in sequence, the cumulative severity of these tests in all probability far exceeds the severity of an accident in transportation. It is highly improbable that a container would be subjected to conditions as severe as one of these conditions, let alone all three in the sequence provided for in the test.

The permissible radiation levels and releases under normal and accident shipping conditions are shown below.

NORMAL AND ACCIDENT SHIPPING REQUIREMENTS

	Normal Conditions	Accident Conditions
External Radiation Levels		
Surface of vehicle	200 mrem/h	NA
3 feet from surface of container	NA	1,000 mrem/h
6 feet from external surface of vehicle	10 mrem/h	NA
Permitted Releases		0.1% of total package radioactivity
Noble gases	none	1,000 Ci
Contaminated coolant	none	0.01 Ci alpha, 0.5 Ci mixed fission products 10 Ci iodine
Other	none	none
Contamination Levels		
Beta and gamma	2,200 dpm/100 cm^2	NA
Alpha	220 dpm/100 cm^2	NA

In most cases the containers should have radiation levels and releases during accidents somewhat less than those permitted by the regulations because the fuels and materials which will be handled are not expected to be at the cask design activity levels.

Since spent fuel will not be shipped until about 1977, contracts have not been made for the equipment and services for spent fuel shipments. Thus, the exact details of cask design and safety analysis in support of a specific licensing effort are not available at this time. However, TVA will ensure that the AEC, DOT, and any other applicable criteria for spent fuel casks become conditions of the contract for these services.

(c) Radwaste container description and licensing - The design of the solid waste packaging station permits the use of several different types of containers or packages. The exact type of container to be used for shipments of the higher activity low level wastes from the plant has not been determined at this time. However, for purposes of evaluating the environmental risks associated with shipment of radioactive wastes from this plant, TVA has used the design and safety analyses made under contract with ATCOR, Inc., for the Browns Ferry Nuclear Plant shipping cask. The container designed under this contract (LL-60-150) has been licensed (41-08165-06) for shipping the higher activity low level wastes from Browns Ferry.

The LL-60-150 cask is designed to meet or exceed the requirements established by AEC and the Department of Transportation for the shipment of large quantities of radioactive material. The evaluation made by ATCOR, Inc., in support of licensing for this cask considers both normal and accident conditions of transport.[14] An analysis was performed to demonstrate that the cask provides adequate shielding to satisfy dose rate levels in the vicinity of the cask as required for normal conditions of transport. A shielding analysis was also performed in order to assure that the cask meets the dose rate requirements after a shielding loss has occurred due to a hypothetical accident occurrence.

Accident analysis showed that the lead may slump towards the bottom of the cask as a result of the hypothetical 30-foot drop accident. The level of the lead falls 1.6 inches which will not remove the lead shielding from the top of the solid waste source. At 3 feet from the surface of the cask, the dose rate is estimated

to be less than 500 mrem/h (assuming 4.02 mrem/h at 6 feet before the accident), which is less than half the limit of 1,000 mrem/h at 3 feet stated in 10 CFR Section 71.36(a)(1).

The analysis for puncture resistance was performed and it was found that when considering any point along the 1-1/2-inch thick outer shell, failure in this mode will not occur and no release of radioactive material to the exterior or dose rates in excess of 10 CFR Section 71.36 limits will occur. An analysis has been performed of the hypothetical fire accident. The thermal conductivity across the outer and inner steel shells plus the air gap is sufficiently low to keep the temperature of the lead about 150°F below its melting point. It was also shown that the cask is capable of holding the vapor pressure resulting from the elevated temperatures.

Immersion of the cask under 3 feet of water for more than 24 hours will not cause any detrimental effect since the cask was established in the analysis to be leaktight following the preceding accident conditions.

For lower activity level wastes (activities of 0.3 Ci/ft^3 or less), an all steel cask holding about 183 ft^3 has also been designed and is being constructed by ATCOR, Inc., for use at Browns Ferry and could be used at Sequoyah.

Low activity compressible wastes will be packaged for shipment in appropriate containers. Radioactive equipment components will be shipped by contract with a specialist who will provide the necessary containers, such as modified spent fuel casks.

(3) Transportation procedures - Elements of the procedures to be followed by TVA for handling radioactive materials for transportation and while in shipment are given below. These procedures will cover the normal and accident conditions which might be encountered.

(a) Onsite procedures - The administrative control of radioactive materials intended for offsite shipment will include the following:

a. Certify container contents.

b. Assure performance of all tests on loaded containers as required by 10 CFR Section 71.35, 49 CFR Section 173.393(j), and 49 CFR Section 173.397(a).

c. Ensure that container and vehicle meet the applicable requirements of regulatory bodies for movement offsite.

d. Qualified personnel with appropriate equipment to be available to make routine determinations as required by (b) above.

e. Provide estimated time of arrival (ETA) at destination.

f. Provide approximate routing, mode of transport, estimated entry and exit times to various states as appropriate.

(b) Offsite procedures - The driver of the vehicle will be responsible for control of shipments en route and for following the transportation procedures delivered to him before leaving the site.

The state requirements for notification and responsible party to notify when radioactive materials are scheduled to be shipped through various states are given in Table 2.1-3.

(c) Accident occurrences during transport - Each state through which these materials pass will have developed emergency plans for radioactive transportation accidents. These plans, in conjunction with TVA transportation accident procedures, will provide for rapid and orderly use of state facilities and personnel, augmented as necessary by TVA, carrier, and municipal emergency personnel and AEC radiological assistance teams in the event an accident occurs in the shipment of radioactive materials by TVA. In the event of an accident, emergency plans will be initiated to minimize a radiation hazard to the public and the environment.

Accident procedures regarding transportation of radioactive material are described in TVA's nulcear plant procedure manual[15] and the TVA Radiological Emergency Plan.[16] Elements of the procedures for handling transportation accidents for which TVA has responsibility will include, but are not limited to, the following:

1. Vehicular Accidents - General
   a. In the event of vehicular accident involving radioactive material, establish a restricted area [10 CFR Section 20.203(b) and (c)].
   b. Use radiation survey meter to establish the perimeter of the restricted area.
   c. If survey meter is inoperable, calculate from experience and training a very conservative perimeter.
   d. If survey meter is operable and no radiation hazard exists and the vehicle is in safe operating condition the driver may continue en route if not detained by other accident-related conditions.

e. In any case, immediately after establishing a restricted area or before proceeding on way, TVA shall be notified.

2. Notification and Reports of Incident

a. Appropriate TVA personnel receiving notice of a transportation accident involving leakage of radioactive material shall notify the TVA load dispatcher who notifies the Central Emergency Control Center (CECC) director.

b. The CECC director alerts the TVA decontamination team and notifies as appropriate the AEC Operations Office, the State Department of Public Health, the state police, the AEC Division of Compliance, and the DOT Office of Hazardous Materials.

c. The CECC director will provide assistance for cleanup and recovery operations as needed.

TVA has consulted and will consult further with appropriate state agencies regarding the necessary emergency planning for shipments of radioactive material through the state and to seek the state's agreement with TVA's Radiological Emergency Plan.

5. Conclusion - Due to the integrity of the containers used for shipping new fuel elements, spent fuel elements, and low-level radioactive wastes; the emergency plans for vehicular accidents; the administrative control exercised over transportation; and coordination with appropriate state agencies; it is concluded that an insignificant environmental risk will result from the transportation of fuel elements from the fuel fabrication plant to the reactor, or spent fuel elements to the fuel reprocessing plant, and of low-level waste to offsite disposal grounds.

It is also concluded that the transportation of cold fuel to the reactor and irradiated fuel from the reactor to a fuel reprocessing plant and the transportation of solid radioactive wastes from the reactor to low-level waste burial grounds is within the scope of the Commissions "Enviromental Survey of Transportation of Radioactive Materials to and from Nuclear Power Plants," and the contribution of the environmental effects of such transportation to the environmental costs of licensing the nuclear power reactor is as set forth in that document.[17]

REFERENCES FOR SECTION 2.1

1. Atomic Energy Commission Regulations. Title 10 Code of Federal Regulations Part 70 (10 CFR 70).

2. Department of Transportation Regulations. 49 CFR Section 173.393.

3. Department of Transportation Regulations. 49 CFR Section 173.398.

4. Department of Transportation Regulations. Shipping Container Specifications, Title 49 Code of Federal Regulations Part 178 (49 CFR 178).

5. Department of Transportation. "1969 Accidents of Large Motor Carriers of Property," December 1970.

6. Department of Transportation Regulations. 49 CFR Sections 173.24; 173.389 through 173.399.

7. Department of Transportation. Transportation of Hazardous Materials, Title 49 Code of Federal Regulations Part 171 through Part 179 (49 CFR 171-179).

8. Atomic Energy Commission. Packaging of Radioactive Materials for Transport, Title 10 Code of Federal Regulations Part 71 (10 CFR 71).

9. Atomic Energy Commission Regulations. 10 CFR Part 71, Appendix C.

10. Atomic Energy Commission. License for Delivery of Radioactive Material to a Carrier for Transport, Special Nuclear Material License--SMN-338 Docket No. 70-337, Amendments 71-37 and 71-38, Westinghouse Electric Corporation.

11. Atomic Energy Commission Regulations. 10 CFR Section 71.36.

12. Department of Transportation Regulations. 49 CFR Section 173.398.

13. Design and Analysis Report, submitted to AEC in support of licensing of IF-300 Shipping Cask - Docket No. 50-268, Amendment, 71-1 - General Electric Company.

14. Safety Analysis Report for the Shipment of Radioactive Solid Waste in the LL-60-150 Cask from the Tennessee Valley Authority Browns Ferry Nuclear Plant Units 1 and 2 - ATCOR, Inc.

15. Tennessee Valley Authority, Division Procedures Manual, Division of Power Production, August 11, 1972.

16. Tennessee Valley Authority, TVA Radiological Emergency Plan.

Table 2.1-1

RADIOACTIVITY OF IRRADIATED FUEL[a]

(Ci/MTU)[b]

	Cooling Period (in days)		
	90	150	365
Fission Products	6.19×10^6	4.39×10^6	2.22×10^6
Actinides (Pu, Cm, Am, etc.)	1.42×10^5	1.36×10^5	1.24×10^5
Total	6.33×10^6	4.53×10^6	2.34×10^6

PREDOMINANT FISSION PRODUCTS IN GASEOUS FORM INCLUDED IN RADIOACTIVITY OF IRRADIATED FUEL

(Ci/MTU)

	Cooling Period (in days)		
	90	150	365
Krypton-85	1.13×10^4	1.12×10^4	1.08×10^4
Xenon-131m	1.06×10^2	3.27×10^0	1.08×10^{-5}
Iodine-131	3.81×10^2	2.17×10^0	1.98×10^{-8}

THERMAL ENERGY IN IRRADIATED FUEL

(Watts per metric ton of uranium)

	Cooling Period (in days)		
	90	150	365
Thermal Energy	2.71×10^4	2.01×10^4	1.04×10^4

a. Estimated burnup 33,000 MWD/MTU - Siting of Fuel Reprocessing Plants and Waste Management Facilities - ORNL - 4451, July 1970.

b. Approximately two assemblies per MTU.

Table 2.1-2

RADIOACTIVE MATERIALS TRANSPORTATION - SUMMARY OF EFFECTS

(Normal Conditions)

Type	Transportation: Mode	Transportation: Frequency (Shipments/yr)	Stationary Cask Radiation Exposure (mrem/h): at 6 ft	Stationary Cask Radiation Exposure (mrem/h): at 100 ft	Cask Moving at 20 mi/h Individual Exposure (mrem/trip): Maximum	Cask Moving at 20 mi/h Individual Exposure (mrem/trip): Average	Population Exposure (man-rem/yr)
Spent Fuel	Rail (5 MTU/ shipment)	13	10	0.1	0.00029	0.000016	0.008
Waste							
Low Level	Truck	50[a]	10	0.1	0.00029	0.000016	0.030
						Total	0.038[b]

(10 CFR Part 71 Accident Conditions)

Type Shipment	Transportation: Mode	Transportation: (Shipments/yr)	Direct Radiation Dose Rate (mrem/h): at 3 ft	Direct Radiation Dose Rate (mrem/h): at 50 ft	Fission Gas Release External Dose (mrem): Whole body	Fission Gas Release External Dose (mrem): Skin	Fission Gas Release Whole Body Population Dose (man-rem	Thyroid Dose (rem)
Spent Fuel	Rail (5 MTU/ shipment)	13	1,000	17	2	86	0.07	5
Waste								
Low Level	Truck	50[a]	500					

a. Design conditions.
b. This population group receives about 5,250 man-rem/yr exposure from natural background radiation (140 mrem/yr).

Table 2.1-3

NOTIFICATION REQUIREMENTS OF STATES

FOR SHIPMENT OF RADIOACTIVE MATERIAL

Alabama

Requirements:

Telephone or telegraph
Route, mode of transportation, time of arrival in state

Notify:

Director
Division of Radiological Health
Room 311, State Office Building
Montgomery, AL 36104
Telephone: 205-269-7634

Georgia

Requirements:

Letter, telephone or telegraph
Approximate route and mode of transportation

Notify:

Chief
Radioactive Materials Control Section
Division of Radiological Health
535 Milam Avenue, SW
Atlanta, GA 30314
Telephone: 404-762-6111

Illinois

Requirements:

Letter, telephone or telegraph
Route, estimated arrival time in state

Notify:

Director
Department of Public Health
535 West Jefferson
Springfield, IL 62706
Telephone: 217-525-6550

Indiana

Requirements:

No notification required

Notify:

Director
Division of Radiological Health
1330 West Michigan
Indianapolis, IN 46206
Telephone: 317-633-6340

Kentucky

Requirements:

Letter, telephone or telegraph
Route, estimated entry and exit times in state

Additional:

Identify carrier and approximate activity of each shipment

Notify:

Director
Radiological Health Program
Kentucky State Department of Health
275 East Main Street
Frankfort, KY 40601
Telephone: 502-564-3700

Table 2.1-3 (continued)

Missouri

Requirements:

Letter, telephone or telegraph
Route, mode of transportation, entry and exit times in state

Notify:

Director,
Radiological Health Division
Broadway State Office Building
Jefferson, MO 65101
Telephone: 314-635-4111

Additional:

Truck shipments - license number and/or other identifying numbers, color of truck, entry and exit points in state, highway patrol will meet truck at border and provide protective following as a safety feature

Rail shipments - name of railroad, shipment car number and its location within the train, notification in transit if other cars are added or deleted from train, thus changing relative location of shipment within train, highway patrol will provide surveillance at locations where possible

North Carolina

Requirements:

Letter or telegraph
Route, mode of transportation

Notify:

Director
Division of Radiation Protection
North Carolina State Board of Health
P.O. Box 2091
220 North Dawson
Raleigh, NC 27607
Telephone: 919-829-4283

Comment:

Notification for each individual shipment may not be necessary if specific time interval when several shipments may be made can be scheduled. State is now in the process of formulating emergency planning with regard to shipments of this sort, and requirements have not been formalized.

South Carolina

Requirements

No notification required

Notify:

Director
Division of Radiological Health
South Carolina State Board of Health
2600 Bull Street
Columbia, SC 29201
Telephone: 803-758-5548

Tennessee

Requirements:

Letter or telephone
Approximate route and mode of transportation

Notify:

Director
Division of Radiological Health
727 Cordell Hull Building
Nashville, TN 37219
Telephone: 615-741-3161

2.2 Environmental Aspects of Transmission Lines - The inservice dates for units 1 and 2 at Sequoyah Nuclear Plant are tentatively scheduled for June 1976 and February 1977 respectively. However, system studies have indicated an early need for the 500-161-kV transformer bank at Sequoyah along with a major portion of the transmission line connections. These facilities are required to supply the rapid load growth in the Chattanooga-Cleveland-Charleston area. Also, since filing the draft statement on the Sequoyah project, increased load requirements in the Wartrace-Tullahoma-Arnold Engineering Development Center (AEDC) area have made it necessary to advance construction of a 500-kV transmission line from Sequoyah to this area for initial operation at 161 kV. The impacts of this additional transmission line are accessed below along with the impacts of the transmission line network associated with the Sequoyah project.

The following table summarizes the lines which are required to connect the Sequoyah Nuclear Plant switchyard into the TVA transmission system (see figures 2.2-1, 2 and 3). Construction has principally been completed on all connections except the Sequoyah-Franklin 500-kV line.

Line Name	Voltage (kV)	Length of New Construction (Miles)	Inservice Date
Widows Creek-Charleston, Loop to Sequoyah Nuclear Plant	161	0.7	August 1972
Watts Bar-Chickamauga, Loop to Sequoyah Nuclear Plant	161	7.0	September 1972

Line Name	Voltage (kV)	Length of New Construction (Miles)	Inservice Date
Chickamauga-East Cleveland, Loop to Sequoyah Nuclear Plant	161	18.5	November 1972
Sequoyah-Concord	161	18.4	November 1972
Sequoyah-Charleston No. 2	161	20.8	July 1973
Sequoyah-Franklin (Initial Operation at 161 kV)	500	58.7	November 1974
Sequoyah-Georgia State Line	500	21.4	April 1972
Widows Creek-Bull Run, Loop to Sequoyah Nuclear Plant	500	1.0	April 1972

Three 500-kV transmission lines will be required initially to provide system connections for the new plant. Two of these connections were provided by opening the existing Widows Creek-Bull Run 500-kV Transmission Line and looping each of the resulting line sections approximately 0.5 mile to the nuclear plant switchyard. This established 500-kV transmission lines to Widows Creek Steam Plant and Bull Run Steam Plant. The third 500-kV connection, which was placed in service in April 1972, is the Sequoyah-Georgia State Line 500-kV Transmission Line. This line extends 21.4 miles within the TVA service area to the Georgia-Tennessee state line and serves as an intersystem tie line with the Georgia Power Company by connecting to their 64-mile 500-kV line which extends northward from the Bowen Generating Plant.

Prior to the operation of unit 1 at the Watts Bar Nuclear Plant upstream from Sequoyah, the 500-kV transmission line from Sequoyah to Bull Run Steam Plant will be looped into the Watts Bar Nuclear Plant site to form the Watts Bar-Sequoyah No. 1 500-kV line. Prior to the operation of unit 2 at the Watts Bar Nuclear Plant, another 500-kV line, the Watts Bar-Sequoyah No. 2 500-kV line, will be constructed. The discussion of impacts associated with this line can be found in section 2.2 of the Watts Bar Nuclear Plant environmental statement, issued on November 9, 1972.

Initially there will be nine 161-kV transmission line connections for the new plant. One of these, a temporary connection to AEDC, will utilize a major portion of the future Sequoyah-Franklin 500-kV Transmission Line. Initially this line will be operated at 161 kV to supplement the power supply system into the Wartrace-Tullahoma-AEDC area.

The transmission line routes as shown on figures 2.2-1, 2.2-2, and 2.2-3 represent approximately 147 miles of new line construction, necessitating the purchase of 2,700 acres of new rights of way. An additional 20 miles of existing rights of way were utilized for the line connections to Sequoyah. New transmission lines were constructed on approximately 76 miles of common rights of way to reduce overall land requirements. Approximately 60 percent of the new right of way requirements are located in woodland and 40 percent on cleared land.

As previously indicated, most of the transmission line connections covered by this statement have been completed and the remaining line is under construction. The statements of policy, construction practices, and methods of minimizing environmental impacts which follow were utilized

on the completed lines and will be adhered to in constructing the remaining line.

1. General considerations - As a first step in the transmission line location process, topographic maps were examined in the office to determine the best apparent routes. Then a field reconnaissance was made using these maps. In the field, engineers first looked for the best places to cross major highways and secondary roads, at the same time avoiding, to the extent possible, residential, commercial, and industrial areas; recreational areas and other developments; and areas of historical, cultural, or scenic significance. Locations on crests of mountains and ridges were generally avoided to minimize visual impacts.

Route selections were coordinated with municipal, county, and state planning boards and with municipal, state, and Federal authorities where public lands were crossed. At the same time care was taken to minimize the visual and physical impact of transmission facilities on private properties. Locations were chosen primarily to avoid conflicts with homes and outbuildings, and property lines were followed where feasible.

In general, final route selections were made in keeping with the Environmental Criteria for Electric Transmission Systems.[1]

Topographic maps are frequently several years old and do not reflect recent manmade features on the land. When this is the case, aerial photographs are made along the tentatively selected route so that a final route can be determined with full knowledge of land use developments. A number of photographs in the general area of the nuclear plant and the river crossing locations were utilized for this purpose.

In selecting routes for transmission lines, TVA attempts to locate lines so that no family or business relocations are required. This policy was followed in the selection of routes for the Sequoyah Nuclear Plant lines. However, several relocations were unavoidable. For these families, assistance was provided in accordance with the "Uniform Relocation and Real Property Acquisition Policies Act of 1970" (Public Law 91-646).

To the extent possible TVA avoids routing lines through residential areas. However, such areas frequently develop adjacent to the cleared land created by the construction of transmission lines. When residential areas could not be avoided, environmental impacts were minimized by following property lines as much as practicable, preserving natural vegetation and avoiding the splitting of land use zones.

Open land that is not being cultivated is generally preferred to timbered land for line locations, and routes were chosen to minimize conflicts with existing land uses. However, alternate routes which resulted in substantial increases in length and costs were generally avoided unless overriding environmental or land use problems were identified.

It is frequently necessary in the construction of transmission lines to cross rivers or other bodies of water. Nine transmission lines that connect to the Sequoyah Nuclear Plant cross the Tennessee River (Chickamauga Reservoir). Common structures have been used to reduce the number of separate tower crossings to six. In selecting locations for these crossings, conflicts with residential, commercial, and industrial developments, game sanctuaries, and scenic and recreational areas were avoided.

In crossing streams under the jurisdiction of state agencies, onsite inspections are made with agency representatives to assure agreement on the location. All scenic river crossings were coordinated with the appropriate local, regional, and state planning agencies.

All crossings of navigable streams or reservoirs were coordinated with the United States Corps of Engineers. Additional crossings of streams and drainage areas having water conservation projects planned by the Department of Agriculture's Soil Conservation Service were coordinated with that agency.

Within TVA the line routes have been closely coordinated with the Division of Navigation Development and Regional Studies, the Division of Reservoir Properties, the Office of Tributary Area Development, the Division of Environmental Planning, and the Division of Forestry, Fisheries, and Wildlife Development.

The transmission line structures for these lines are self-supporting steel towers. Utilizing this type structure eliminates the need for guys. The small amount of land occupied by the structures is the only part of the right of way which cannot be used for other purposes. The balance of the rights of way remain clear of obstructions and are available for a variety of other uses.

2. Effects of Transmission Line Rights of Way Clearing and Control Practices -

(1) Shear Clearing - In constructing transmission lines through wooded areas, TVA "shear clears" the right of way (clearing of trees and other vegetation to the ground level) except where

outcroping of rocks or steep slopes makes it impractical. Where these exceptions are encountered, hand clearing is utilized. While the removal of vegetation from the right of way by shear clearing constitutes an impact on terrestrial plant and animal communities existing in the corridor area, it is mitigated by TVA's practice of reseeding the rights of way with pasture type grasses and also by the natural invasion by weeds and plants during the first growing season. Some typical animal species that will be displaced by this removal of forest cover are the red-eyed vireo, yellow-billed cuckoo, and numerous species of small mammals, reptiles, and amphibians. Although shear clearing may affect some type of plants by removal and animal life by displacement, an "edge effect" is created which greatly benefits other types of wildlife on the right of way.[2,3]

(2) <u>The "Edge Effect"[2,3] and Wildlife Benefits</u> - The interface or "edge" (also referred to as "ecotone zone") refers to that area of landscape where two or more vegetative types come together. When transmission line rights of way traverse forest land edge is created where low herbaceous and woody plant growth meet with forest vegetation. Where transmission lines traverse open farmland, crops and weedy or "brush" rights of way often merge. This "merge" (edge) of two diverse plant communities will often produce or attract more kinds and numbers of animals than would occur in either habitat type alone.

Approximately 1,620 acres of woodland will have been cleared when the proposed transmission line connections are

completed. The remaining 1,080 acres of new rights of way traverse farm, roads, and other man-related land-use activities which tend to keep vegetative succession in its early stages. The majority of woodland to be cleared is interspersed by these "open-land areas." The resultant habitat, described above, primarily supports wildlife species that prefer ecotone zones and open situations. Typical species prefering this environment are the cottontail rabbit, cotton rat, woodchuck, bobwhite quail, mourning dove, towhee, prairie warbler, and a number of reptiles and amphibians. To make transmission line corridors even more attractive to small game species such as quail, dove, and rabbit, TVA, at the landowners request, will seed the cleared areas with selected grasses and other food and cover plants. TVA, in cooperation with the Tennessee Game and Fish Commission, has published a booklet for distribution to landowners describing practices they can employ to benefit various wildlife species on rights of way.[4]

(3) Benefits to Wildlife from Right of Way Maintenance - Utility line rights of way can rarely go longer than 5 years without mechanical maintenance of some type. Early stages of plant succession on cleared right of way, particulately the first 6 to 8 years, are the most productive for many wildlife food and cover plants. In addition, the low herbaceous plant growth supports insects which provide the high protein content necessary in the diet of many young bird species (game and nongame).

Power line rights of way create long linear forest openings which are regularly maintained to prevent power outages. Sunlight penetrating the forest via the right of way stimulates understory growth adjacent to the power line and results in a plant community which provides diversity in food and cover in the forest environment. Periodic

power line maintenance perpetuates these beneficial wildlife habitat conditions for species prefering edge and open areas.

(4) Chemical Maintenance of Rights of Way - Transmission line right of way maintenance requires that brush and trees be controlled so they will not grow into the conductor and cause service interruptions and so they do not impede restoration of service when outages occur. The relatively long growing season in the Tennessee Valley region makes brush control a special problem. Growth of vegetation is controlled by mechanical cutting, replacement planting, and the application of herbicides. During the fiscal year ending June 30, 1971, a transition was made in TVA's right of way maintenance program from essentially complete herbicidal control to primarily mechanical maintenance. Chemical maintenance is now limited to those areas which are both remote and inaccessible and annually involves only 4 or 5 percent of all TVA transmission line right of way acreage.

When herbicides are used, their application is carefully controlled to ensure on-target application and avoid drift off the right of way and contamination of watercourses. Watercourses are identified by ground or air reconnaissance prior to spraying, and no chemicals are applied within 100 feet of these areas. The herbicides used are Tandex, Tordon 101, Tordon 10K pellets, 2,4,5-T and/or Hychlor, all of which are approved for this use by the Federal Working Group on Pest Management (FWG on PM). From transmission line right of way inspections, TVA determines each year where chemical control of brush is to be used, the chemicals to be employed, and the method and rate of application. The entire annual program is then submitted for approval to the FWG on PM, and no herbicides are applied until approval is received.

In addition to information about program objectives, chemicals used, and mode of application, the program annual report summarizes precautions taken by TVA in applying the chemicals and specifies areas of the environment that are to be avoided or treated with caution. Field investigations have revealed no significant adverse environmental effects from the use of chemicals in the right of way maintenance program.

TVA employees responsible for right of way maintenance work closely with wildlife biologists and foresters of TVA's Division of Forestry, Fisheries, and Wildlife Development. The combined expertise of these TVA employees and other TVA specialists ensures that biologically sound and economically feasible recommendations are made to improve wildlife habitat on the rights of way.

A detailed report of TVA's program for chemical treatment of transmission line rights of way as submitted to the Federal Working Group can be found in Appendix F1.

(5) Multiple use of rights of way - As a general rule, where transmission line rights of way cross wooded areas, TVA is willing to perform the necessary clearing or invest as its part of a cooperative arrangement an amount which approximates the average cost to clear or later reclear the area as dictated by maintenance requirements. TVA negotiates with county agents, state and Federal park commissions, soil conservation agencies, sportsmen groups, and other interested agencies that propose compatible uses for wooded land within easement areas that will meet the goals of the interested parties. Under such an arrangement, forest development interest can be implemented

which allow growing of small trees such as Christmas trees and nursery stock. Also, buckwheat, Korean and Kobe Lespedeza, and other low-growing grasses and seed crops which are beneficial to small game habitat can be planted.

It is recognized that many additional multiple uses of rights of way can be identified. If the landowners desire to use the rights of way for the establishment of playgrounds, athletic fields, golf courses, parks, picnic areas, or trails for hiking and horseback riding, such use would be permitted under the terms of TVA's easement.

TVA recognizes there will be an annual loss of forest products due to the construction and operation of the Sequoyah transmission line connections. Where wooded areas are traversed, timber production is lost for the life of the line.

3. Solid waste disposal - TVA contracts most right of way clearing for the construction of transmission lines. Open burning normally employed for disposal of forest slash cleared from rights of way was used for the Sequoyah transmission line connections and was performed in compliance with local, state, and Federal air pollution guidelines. This resulted in the release of some particulates and gases into the atmosphere. However, these minor effects were localized and generally short lived.

A burning method which minimizes the release of smoke into the atmosphere is occasionally utilized in areas where open burning is undesirable or not permitted. In this method forest slash is burned by using an air curtain incinerator. The slash is placed in a large pit (approximately 10 feet deep, 15 feet long, and 10 feet wide) and set on fire. Air, fed to

the fire by blowers, is supplied at the proper rate for minimum smoke emission. At least one guard and as many men as required to supervise the burning process are kept on duty night and day until all fires have been extinguished.

In cases where disposal by burning is not desirable, slash is piled in windrows along the edge of the right of way or in scattered brush piles along slopes and ravines. An alternate method of disposal is being explored involving mechanical chipping and scattering or piling of chips on the soil.

In general, other solid waste generated by transmission line construction is very small. These minor construction waste items consist of protective wood cribbing attached to conductor reels, cardboard shipping cartons and steel bands used to bind tower structural items and other line hardware. This waste will be returned to staging areas for disposal.

At staging or material assembly points, relatively large quantities of the used packing material which accumulates is transported to state-approved sanitary landfills. However, in localized areas, smaller quantities of wood and paper are disposed of by controlled burning.

4. Erosion control practices - Construction of transmission lines will involve the use of heavy equipment for tower erection and stringing of conductor. Although this equipment may cause temporary rutting along the rights of way, precautionary measures have been taken so that the effects of soil erosion on local water quality is not significant. The erosion of local areas was controlled to a significant degree by: (1) using special construction procedures which limited the

use of heavy equipment in areas of high erosion potential, diverting runoff from exposed land to settling ponds, vegetation was kept on the land as long as possible before construction; and (2) construction activities in certain areas was scheduled to coincide with favorable dry weather conditions.

When line construction activity was completed, the rights of way were contoured and seeded with pasture-type grasses or planted in wildlife food and cover to control soil erosion and provide wildlife habitat.

Where possible, access roads for transmission line construction followed existing farm roads, and after construction TVA restored these roads to at least their original or an improved condition. When a new access road was required, the property owner was consulted regarding the route most beneficial to him after construction. Required grading was engineered to balance cut and fill, which eliminated the need for separate borrow pits. The road routes were selected to minimize damage to existing growth and drainage ditches, terracing, and ground cover were provided in order to prevent soil erosion.

The Widows Creek-Charleston 161-kV Transmission Line No. 1 which was constructed in 1964 traverses the Sequoyah Nuclear Plant site and crosses the Tennessee River (Chickamauga Reservoir) adjacent to the plant site. To provide adequate reservoir clearance and terminal structures of reasonable height, the construction of this river crossing necessitated the building of a peninsula in Chickamauga Reservoir. The peninsula, as constructed in 1963, was approximately 310 feet long and 120 feet wide which provided room for three double-circuit towers with one tower constructed to carry the Widows Creek-Charleston No. 1 line. The peninsula is earth core, riprap revetment construction and was built

while the lake was at its low wintertime level. The earth core placement caused very little sedimentation or siltation in the lake because the rip-rap revetment was in place before the lake level was raised to normal pool.

Coincidental with the construction of Sequoyah Nuclear Plant was the need for additional transmission line connections crossing the river at this location. Consequently, in 1970 the peninsula was extended 200 feet eastward and 110 feet westward making the peninsula large enough for a maximum of six transmission towers. Five towers have been erected to support the existing and proposed transmission connections which cross the river at this location. The lines are discussed later in this text. The sixth tower will be installed when needed at some future date.

The same construction procedures were used to expand the peninsula as were used originally. The entire surface of the peninsula has been covered with crushed limestone rock to provide a stabilized base for use by maintenance personnel and also to prevent surface erosion.

5. Miscellaneous impacts -

(1) Ozone - Ozone can be produced from corona discharges (ionization of the air) in the operation of transmission lines and substations, particularly at the higher voltages. It can be harmful if breathed in sufficient concentrations over prolonged periods. However, it is not considered to be injurious to vegetation, animals, and humans unless concentrations exceed about 0.05 ppm.

Corona discharges can result from abrasions, foreign particles or sharp points on electric conductors and electric equipment, or incorrect design which produces excessively high potential gradients.

Extensive field tests to detect ozone in the vicinity of 765-kV lines were recently completed by the Battelle Memorial Institute under a variety of meteorological conditions. From

these tests it was concluded that no significant adverse effects on vegetation, animals, or humans are to be expected from levels of ozone that may be produced in the operation of transmission facilities at voltages up to 765 kV. Consequently, any levels of ozone that can reasonably be expected to be generated by TVA's transmission facilities (500-kV maximum nominal voltage) would be environmentally inconsequential.

TVA gives careful attention to the design and construction of its transmission facilities to minimize corona discharges. TVA specifications require that transmission line hardware and electrical equipment for operation at 500,000 volts be factory tested to assure corona-free performance up to maximum operating voltage levels.

A more detailed report of ozone characteristics, sources, and a discussion of tests and reference material can be found in Appendix F.

(2) Compatibility with communications equipment - High-voltage power lines operating in close proximity to telephone and signalling equipment can produce undesirable effects on the communication circuit through inductive coupling. However, it is TVA's normal practice to send transmission line vicinity maps to railroad and telephone companies having tracks or communication lines in the general area of proposed power lines for the purpose of making inductive coordination studies. If corrective action is indicated, the problem is jointly studied and any required changes are mutually resolved. This precedure was followed for the transmission line connections to Sequoyah Nuclear Plant.

No inductive coordination problems have been experienced on the Widows Creek-Bull Run 500-kV Transmission Line

which has been in operation for several years. No new problems have been encountered since this line was altered in the vicinity of Sequoyah Nuclear Plant to form the Sequoyah-Widows Creek and Sequoyah-Bull Run 500-kV Lines. No coordination problems have been identified for the Sequoyah Georgia State Line 500-kV Line, and no problems for the other transmission lines are anticipated.

(3) Historical and archaeological compatibility - In selecting routes for the transmission line connections to Sequoyah Nuclear Plant, the National Register of Historical Places, published by the National Park Service, was consulted and no conflicts with known historically significant areas were identified.

As previously indicated, a majority of the transmission line connections to Sequoyah Nuclear Plant were initiated several years ago, and predated TVA's present practice of surveying the rights of way for possible archaeological artifacts. For the completed lines, no archaeological survey was made; however, a comprehensive investigation is under way for the Sequoyah-Franklin 500-kV Line. If significant artifacts are identified, positive steps will be taken for their complete recovery or tower locations will be changed to avoid conflicts and to permit future exploration of the sites.

(4) Impacts on aviation - Tall towers are normally required to accommodate long spans associated with major river crossings or to provide electrical clearance over unusual topographic features or man-made objects. When these towers exceed a height of 200 feet above local terrain or invade upon air traffic patterns, a permit must be obtained from the Federal Aviation Administration prior

to construction. In this regard, all tall structures for the transmission line connections to Sequoyah Nuclear Plant have been coordinated with the FAA and appropriate markings and warning lights have been installed on the river crossing towers.

(5) Impact of support facilities - In defining the scope of this environmental statement, all identified major power system support facilities have been included. Although not specifically described, terminal structures and switching equipment will be required at the Charleston 161-kV Substation and Concord 161-kV Substation. These facilities can be classified as minor station additions which are compatible with the design and architecture of existing facilities at each of these locations.

At this time no transmission line construction other than that described in the proposed action has been specifically identified. It is assumed that in the future, as in the past, generation plant siting studies will consider existing plant expansion as well as new plant site development. On this premise, it is possible that transmission system needs may some day warrant additional line connections at Sequoyah Nuclear Plant. However, the same rigid environmental evaluations and tests will be applied to those facilities as early as possible in the planning process.

(6) Others - During normal operations no adverse environmental impact is expected to occur from either 500-kV or 161-kV transmission lines. During inclement weather and unusual atmospheric conditions a light humming may be heard directly under 500-kV

lines, but this noise is rarely heard off the rights of way. Transmission lines can, under certain conditions, cause mild static charges to develop on fence wires and other ungrounded objects under the lines.

For all transmission line rights of way, property owners retain all mineral rights to their land and may use the land for whatever purposes desired so long as such uses do not conflict with the terms of the easement. In many instances the existing land uses--particularly agricultural uses--may continue. However, buildings, signboards, stored personal property, or other obstructions which create fire hazards and/or interfere with the operation and maintenance of the line may not be located on the rights of way. Except in very unusual situations, the transmission lines will have no effect on aerial crop dusting.

Damage to fences, gates, bridges, and other structures will be paid for or repaired by TVA following construction, and landowners are reimbursed by TVA for the value of crops damaged by construction or later maintenance activity.

6. Transmission line route selections - Based on the above considerations, the proposed and alternate transmission line routes for connecting the Sequoyah Nuclear Plant to the TVA power system are shown on figures 2.2-1, 2.2-2, and 2.2-3. For identification purposes these line connections have been numbered as follows:

1. Sequoyah-Widows Creek 161-kV Transmission Line
2. Sequoyah-Charleston 161-kV Transmission Line No. 1
3. Sequoyah-Watts Bar 161-kV Transmission Line

4. Sequoyah-Chickamauga 161-kV Transmission Line No. 1
5. Sequoyah-Chickamauga 161-kV Transmission Line No. 2
6. Sequoyah-East Cleveland 161-kV Transmission Line
7. Sequoyah-Concord 161-kV Transmission Line
8. Sequoyah-Charleston 161-kV Transmission Line No. 2
9. Sequoyah-Widows Creek 500-kV Transmission Line
10. Sequoyah-Bull Run 500-kV Transmission Line
11. Sequoyah-Georgia State Line 500-kV Transmission Line
12. Sequoyah-Franklin 500-kV Transmission Line

(1) Sequoyah-Widows Creek and Sequoyah-Charleston No. 1 161-kV Transmission Lines - The existing Widows Creek-Charleston 161-kV Transmission Line, which was constructed in 1964, crosses the Sequoyah Nuclear Plant property. To connect this line into the Sequoyah Nuclear Plant, two temporary wood pole structures were retired, and the resulting line sections were extended 0.7 mile on double-circuit steel towers to the plant switchyard. This loop formed the Sequoyah-Widows Creek and the Sequoyah-Charleston No. 1 161-kV Transmission Lines. The entire loop connection was made on TVA property and no new rights of way were required. These lines are identified as Routes 1 and 2 respectively on figure 2.2-1.

(2) Sequoyah-Watts Bar and Sequoyah-Chickamauga No. 1 161-kV Transmission Lines - The existing Watts Bar-Chickamauga 161-kV Transmission Line was opened and looped into the Sequoyah Nuclear Plant switchyard to form the Sequoyah-Watts Bar and the Sequoyah-Chickamauga No. 1 161-kV Transmission Lines. These lines occupy double-circuit steel towers for a total distance of 3.5 miles

and are identified as Routes 3 and 4 respectively on figure 2.2-1. These connections were also constructed on existing TVA property, and no new rights of way were required.

Routes 3 and 4 described above make up two of the eight transmission lines which occupy a commmon 700-foot-wide right of way corridor extending southward from the Sequoyah plant switchyard and crossing Chickamauga Lake. After crossing the lake, the corridor turns southeastward to avoid a church and several homes located along Harrison Bay Road and remains in cleared undeveloped terrain. This 1.9-mile corridor is located on TVA reservoir property.

From this point, the 700-foot corridor narrows to a 450-foot width and continues eastward crossing Harrison Bay Road and Birchwood Pike at approximately right angles and traverses a wooded area before intersecting with the Watts Bar-Chickamauga 161-kV Transmission Line. The 700-foot-wide corridor accommodates a total of eight transmission lines and the 450-foot-wide corridor is occupied by five transmission lines.

(3) Sequoyah-Chickamauga No. 2 and Sequoyah-East Cleveland 161-kV Transmission Lines - The existing Chickamauga-East Cleveland 161-kV Transmission Line was looped into the Sequoyah Nuclear Plant to form the Sequoyah-Chickamauga No. 2 and the Sequoyah-East Cleveland 161-kV Transmission Lines. These lines were constructed on double-circuit steel towers for a total distance of 9.2 miles and are shown as Routes 5 and 6 respectively on figure 2.2-1.

The new double-circuit line extends from the Sequoyah Nuclear Plant in a southerly direction with the initial

2-mile section located on the 700-foot corridor as described in the preceding section. From the end of the 700-foot corridor, the remaining 7.3 miles of double-circuit line occupies new rights of way which parallel and adjoin an existing transmission line. The line route is located in a predominately rural area which is sparsely settled. The terrain is primarily wooded and hilly, and there are no identifiable area land use plans for which the selected line route will conflict or interfere.

(4) Sequoyah-Concord 161-kV Transmission Line - In 1968, when property was purchased for the Concord 161-kV Substation, it was recognized that future connections would be required to a power source at Sequoyah. Therefore, rights of way were obtained at that time for the Sequoyah-Concord 161-kV Transmission Line. The line connection which was completed in 1972 consists of 18.4 miles of double-circuit steel towers with one side conductored. The routing of this line is shown as Route 7 on figure 2.2-1. The vacant side of the double-circuit line will be utilized at a later date when a second 161-kV connection is required from Sequoyah to Concord 161-kV Substation. Sufficient rights of way were also obtained for a future double-circuit line to parallel the existing Concord 161-kV Transmission Line.

After leaving the Sequoyah plant switchyard, the Concord 161-kV Transmission Line crosses the river and follows the same routing as the 9.2-mile Chickamauga-East Cleveland 161-kV loop into Sequoyah described in the preceding section. After leaving the common right of way, the line continues in a slightly southeastwardly direction

and crosses Interstate 75 and U.S. 11 at approximately right angles at an alignment to avoid the heavily populated community of Summit. Once south of Summit, the line route turns toward the southwest, remaining relatively obscured from scattered area homes. Several secondary roads are crossed at right angles. From a point approximately 2 miles north of Ryall Springs, the route follows the low drainage area along Ryall Springs Branch. It then turns westward and crosses East Brainerd Road at right angles before intersecting with the Chickamauga-Concord 161-kV Transmission Line. Good screening is retained on the east side of East Brainerd Road and tower visibility is reduced by surrounding trees. From this point, the new line remains on common right of way with the Chickamauga-Concord 161-kV Line for the remaining distance into Concord 161-kV Substation through open fields.

(5) Sequoyah-Charleston No. 2 161-kV Transmission Line - In conjunction with the rapidly growing industrial loads in the Charleston area, a second 161-kV connection is required from Sequoyah to the Charleston 161-kV Substation. This connection was provided by installing conductors on the vacant side of the existing double-circuit steel towers of the Sequoyah-Charleston No. 1 161-kV Transmission Line for the total distance of 20.8 miles. No new rights of way will be required. This second line to Charleston is identified as Route 8 on figure 2.2-1.

(6) Sequoyah-Widows Creek and Sequoyah-Bull Run 500-kV Transmission Lines - The existing Widows Creek-Bull Run 500-kV Transmission Line traversed the Sequoyah Nuclear Plant property and was recently looped into the Sequoyah switchyard to form the Sequoyah-Widows Creek and the Sequoyah-Bull Run 500-kV Transmission Lines. The

existing line was opened by retiring one structure and the new construction consisted of installing four dead-end structures to form a 0.5-mile loop into the Sequoyah switchyard. All work was performed on existing plant property and no new rights of way were required. The new connections are shown as Routes 9 and 10 respectively on figure 2.1-1.

(7) Sequoyah-Georgia State Line 500-kV Transmission Line - Studies made in 1969 indicated that a high-capacity interconnection would be required between the TVA system and the Southern Company system and that this connection could best be accomplished by constructing a 500-kV transmission line from TVA's Sequoyah Nuclear Plant to Georgia Power Company's Bowen (Etowah) Steam Plant. Initially, consideration was given to a straight line route between the two stations as shown by Route 11a on figure 2.1-1. However, this route would have traversed the Chattahoochee National Forest, the Catoosa Rifle Range, located on U.S. Military Reservation property, and some densely populated areas immediately east of the city of Chattanooga. These factors and numerous other land use conflicts led to the selection of a modified route indicated as Route 11 on figure 2.2-1. Of the total 85-mile line length, TVA was responsible for constructing the 21.4-mile section from Sequoyah Nuclear Plant to the Tennessee-Georgia state line. The transmission line was completed and placed in service in April 1972. The selected line route leaves the Sequoyah switchyard in a southeasterly direction and crosses Chickamauga Lake. From this point, the line turns eastward to avoid a conflict with existing residential developments. The line crosses State Highway 58 at approximately right angles and extends eastward crossing White Oak Mountain via Mahan Gap. By

utilizing the Mahan Gap route, it was possible to place the line structures to effectively avoid silhouetting them against the skyline. The line is located sufficiently far from the Mahan Gap Road to avoid conflicts with the area best suited for future residential development. Much of the route in this area follows a drainage ditch, which presents the least potential for future development.

On the east side of White Oak Mountain the line turns southward and remains on the lower slopes of Lauderback Ridge to minimize public visibility where it crosses Interstate 75. The transmission line towers on either side of the interstate are hidden from view by Lauderback Ridge and a small hill respectively. This line placement was also selected to eliminate any intrusion on the panoramic view of the surrounding valley area when viewed from the White Oak Mountain visitors' overlook adjacent to Interstate Highway 75.

The line continues southward along the side of Lauderback Ridge parallel to U.S. Highway 11. A wide strip of wooded area was retained between the line and highway to provide effective screening. The line then turns eastward crossing U.S. Highway 11 at a right angle before continuing in a generally southeastwardly direction. The change in direction prior to crossing U.S. Highway 11 was made to prevent crossing an area to the south which was being considered for a major campground-motel-resort development.

As the line continues southeastward toward the state line, large holdings of the Bowaters Southern Paper Corporation were traversed. The angles in this section of line were introduced to recognize Bowaters' plans for future development in this area. Lebanon

Ridge was crossed through a small saddle, Maroon Gap, thus avoiding conflicts with homes located on the ridges on each side of Maroon Gap.

During the time that plans were being made for the Sequoyah-Bowen 500-kV connection, studies indicated that a new 69-kV line was needed between TVA's Harrison Bay and McDonald 69-kV Substations. Initial plans were to construct a single circuit wood pole 69-kV line on right of way adjacent to the 500-kV transmission line. However, by utilizing specially designed 500-kV towers, approximately eight miles of the nine mile 69-kV line was underbuilt on the same towers with the Sequoyah-Bowen 500-kV Transmission Line, thus saving approximately 70 acres of new rights of way which would have otherwise been required for the 69-kV transmission line.

(8) Sequoyah-Franklin 500-kV Transmission Line - By the late 1970's, loads in the Wartrace-AEDC-Winchester area cannot be served economically from the 161-kV system and a 500-kV substation will be required in the Franklin, Tennessee, area. This station will be supplied over 500-kV transmission line connections from the Sequoyah Nuclear Plant and the future Maury 500-kV Substation near Columbia, Tennessee. In order to delay the need for 500-kV facilities for as long as practical, the Sequoyah-Franklin 500-kV Transmission Line will be constructed and temporarily connected near the Arnold Engineering Development Center to form the Sequoyah-AEDC 161-kV Transmission Line. The selected route for this line is shown as Route 12 on figure 2.2-2.

The new line will leave the Sequoyah Nuclear Plant to the west by paralleling the existing Widows Creek 500-kV Transmission Line for approximately 2.5 miles. Locating parallel to the existing line right of way will minimize conflict with the potential industrial area adjacent to Sequoyah Nuclear Plant, and an access road and the railroad spur track to the plant. The new line then turns northwestward in the vicinity of Dallas Hollow Road leaving the existing Sequoyah-Widows Creek 500-kV line. The road crossing will remain south of existing real estate developments at the intersection of Dallas Hollow Road and the Sequoyah access road.

The line will then proceed to the north of Daisy, Tennessee, through relatively hilly terrain. The line location in this area is being closely coordinated with the State Highway Department to avoid conflict with a proposed highway bypass in the area. The projected crossing of U.S. Highway 27 will be made through an area occupied by an abandoned clay manufacturing plant and will avoid a planned highway intersection to the north. On the south slope of Waldens Ridge, the line will be placed in a draw to minimize its visual exposure. At the brow of Waldens Ridge, the line will be routed north of existing residential developments.

The line location proceeds to the west through timbered areas staying to the north of identifiable coal deposits and leaves the west side of Waldens Ridge at Jacks Gap. This will allow a perpendicular crossing of U.S. Highway 127. Throughout this area the land adjacent to the Sequatchie River is primarily devoted to farming and pasture use. The line location through this area will remain

approximately 5 miles south of Dunlap, Tennessee, and will utilize low natural growth along the river banks for screening.

The line continues west on the side of a wooded ridge and proceeds toward the Cumberland Mountain range via Palmer, Tennessee. In this area underground and strip mineable coal deposits have been identified. Careful coordination was carried out between TVA and coal company geologists in selecting the rights of way through this area to minimize conflicts with identified coal deposits. The line crosses into Grundy County approximately 1 mile south of Palmer, Tennessee, and for approximately 5 miles will parallel an existing 69-kV transmission line right of way. Natural screening will be retained where the line crosses the Cumberland Trail.

At a point east of Coalmont, Tennessee, the new transmission line intersects with the Winchester-Watts Bar 161-kV Transmission Line. From the point of intersection, the new and existing lines parallel for 15 miles, traversing the Cumberland Plateau in a southwest direction to a point southwest of Pelham. This line location will avoid conflicts with proposed industrial sites northwest of Pelham and will allow a favorable crossing of U.S. Highway 41 where screening is available. Where the line crosses the upper portions of the Elk River, existing woodlands will be utilized for public screening. Throughout Grundy County the line traverses mountainous and heavily wooded terrain.

The transmission line will cross Interstate 24 southwest of Pelham in a relatively flat cleared area. By remaining parallel to the existing 161-kV line, new land requirements adjacent to

the interstate will be minimized. The crossing also will be made approximately perpendicular to the highway and will utilize a long span to allow placement of the towers such that they will not be visable from the interstate highway.

The line then turns to the northwest and enters the predominately rural area of Coffee County. Through this area the line remains approximately 2 miles north of the Elk River and approaches the Arnold Engineering Development Center property from the east. The land traversed in Coffee County is primarily cleared pasture and farmland and has very limited residential development potential.

Over the entire length of the proposed Sequoyah-Franklin 500-kV Transmission Line right of way, numerous deviations were made in cooperation with property owners and other interested parties to avoid potential developments, homesites, lakes, and valuable timber stands. Portions of the original route projections found to be undesirable are identified as 12b, 12c, 12d, 12e, 12f, and 12g on figures 2.2-1 and 2.2-2. Beginning at a point west of Palmer and extending to the AEDC property line, an alternate route was investigated which is north of the selected route. This alternate is identified as Route 12a on figure 2.2-2 and was less favorable for the following reasons: (1) considerably more right of way would be required since it would not be possible to utilize right of way common with an existing transmission line as afforded by Route 12; (2) conflicts would exist in the area northwest of Pelham which has been identified for future industrial development; (3) a greater visual impact would be created by crossing Interstate 24 in a low cleared area with no available screening; and (4) this crossing of Interstate 24 would result in two major line crossings within 4 miles of each other.

In conjunction with the transmission line connections for Sequoyah Nuclear Plant and in addition to the new line work already described, several existing 161-kV lines in the immediate area have been reconductored to provide higher capacity circuits consistent with expected system loading conditions. However, no new rights of way were required for this work. Figure 2.2-3 has been included for a more detailed description of transmission line arrangements near the switchyards including the river crossings.

7. Summary - The transmission line connections as described for Sequoyah Nuclear Plant have been located and constructed to reduce environmental impacts of the project. Also land use conflicts have been minimized through close coordination with local, state, and Federal agencies.

The amount of land required for transmission line rights of way, in proportion to the added transmission capacity from the proposed facilities, has been greatly reduced by TVA's use of extra-high voltage lines to transmit power generated at the Sequoyah Nuclear Plant. One 500-kV transmission line can transmit more power than ten 161-kV lines while requiring only twice as much right of way as one 161-kV transmission line. Also, existing 161-kV lines in the area were utilized by making short connections into the Sequoyah plant to greatly minimize the land requirements for additional rights of way.

REFERENCES FOR SECTION 2.2

1. U.S. Department of the Interior and U.S. Department of Agriculture, Environmental Criteria for Electric Transmission Systems, Washington, DC, U.S. Government Printing Office, 1970, 0-404-932.

2. Leopold, Aldo., Game Management: Charles Scribners Sons, New York, 1933, p. 131.

3. Odum, E. P., Fundamentals of Ecology: W. B. Saunders Company, 1959, pp. 278-281.

4. Tennessee Valley Authority, Division of Forestry, Fisheries, and Wildlife Development and Tennessee Game and Fish Commission, What Can You Do To Benefit Wildlife on Your Land?, 1969.

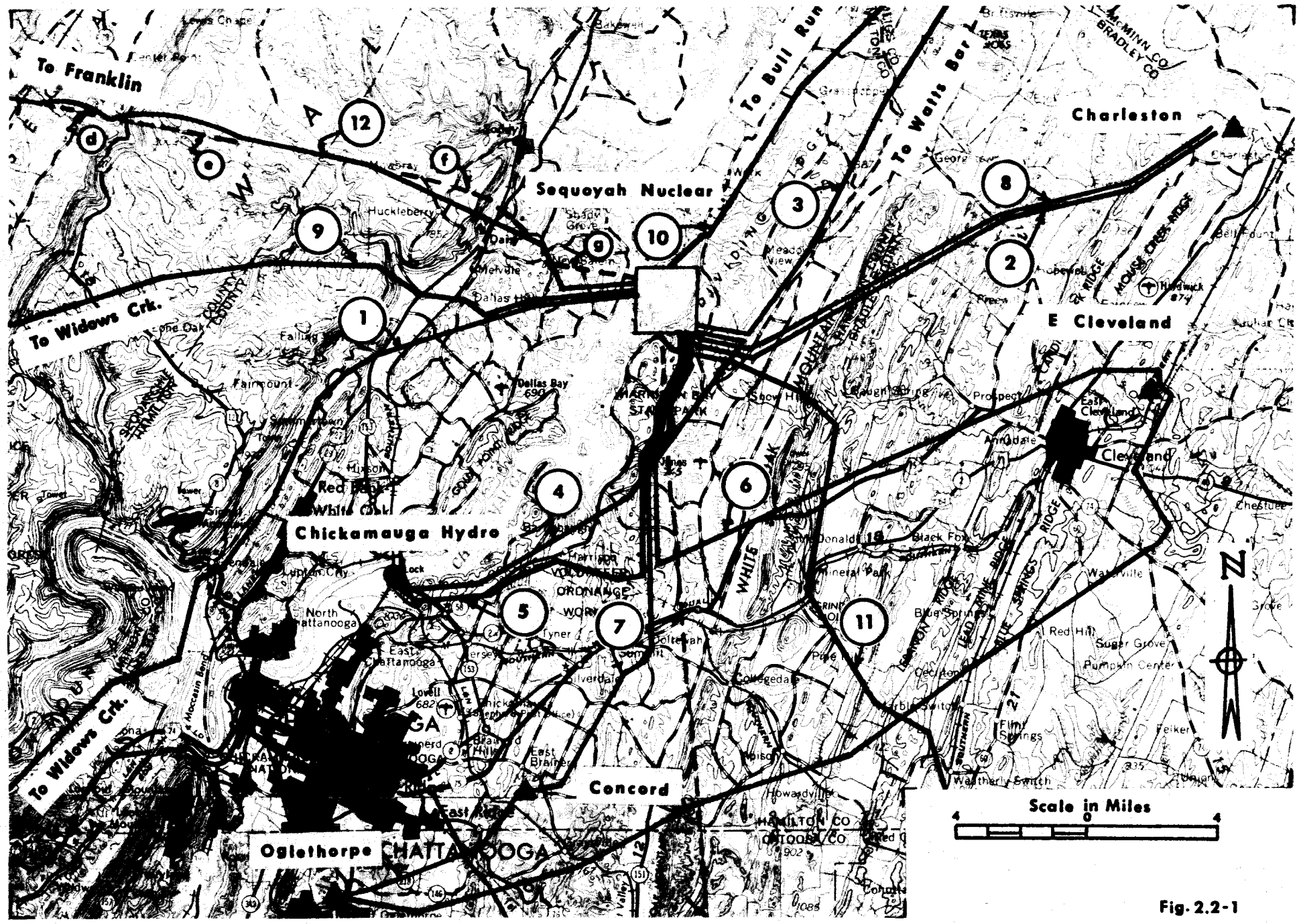
To Franklin
To Widows Crk.
To Widows Crk.
To Bull Run
To Watts Bar
Charleston
Sequoyah Nuclear
E Cleveland
Cleveland
Chickamauga Hydro
Concord
Ogiethorpe
CHATTANOOGA
Huckleberry
Dallas Bay
Fairmount
Red Bank
White Oak
North Chattanooga
East Chattanooga
Lovell
Tyner
Collegedale
Ooltewah
Mineral Park
Black Fox
Blue Springs
Red Hill
Sugar Grove
Pumpkin Center
Weatherly Switch
Howardville
Hidwick
Prospect
Annadale
Chestuee
Scale in Miles
4
0
4
N
1
2
3
4
5
6
7
8
9
10
11
12

Fig. 2.2-1

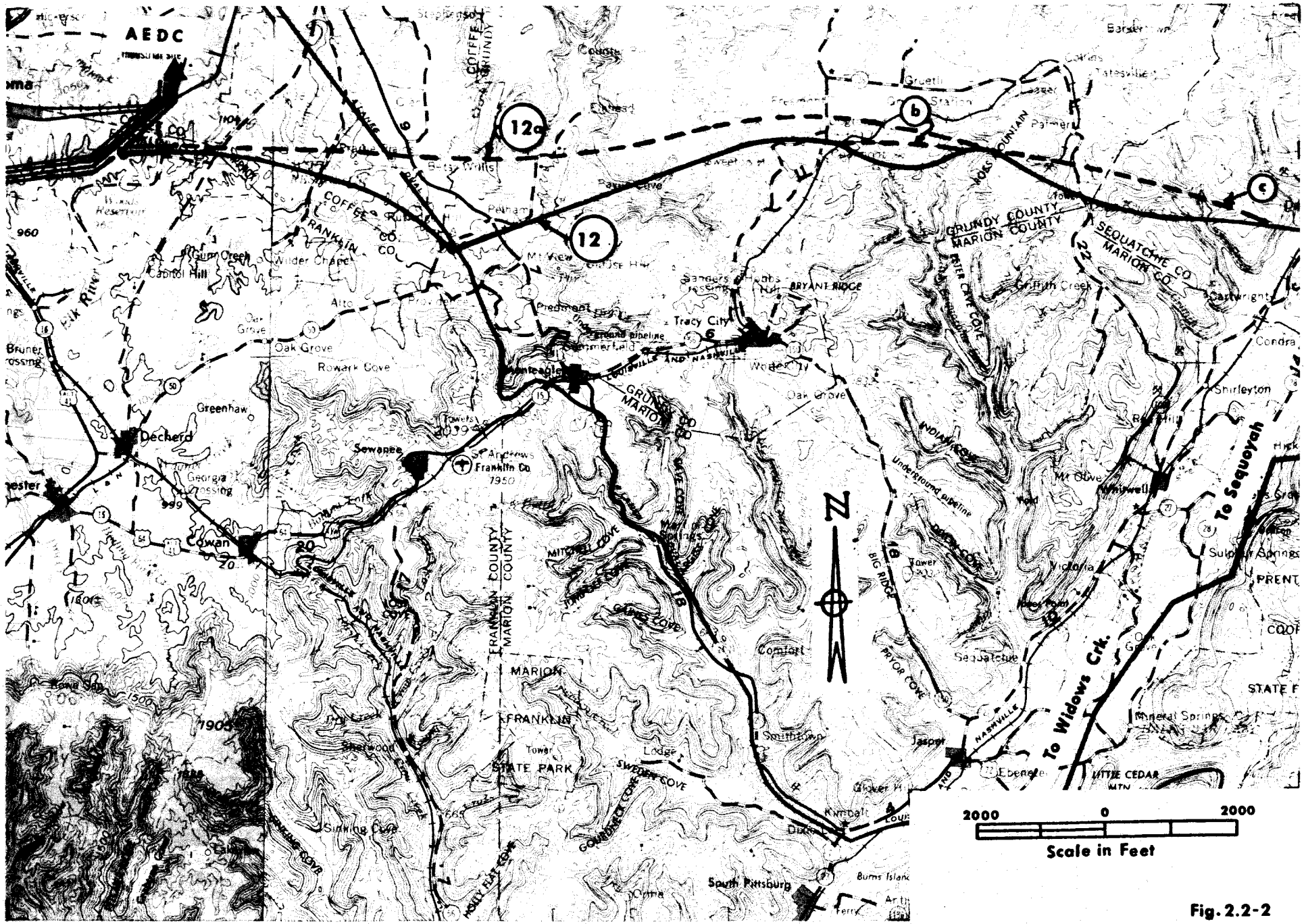
AEDC
12a
12
b
c
COFFEE CO.
FRANKLIN CO.
GRUNDY COUNTY
MARION COUNTY
SEQUATCHIE CO.
MARION CO.
Tracy City
Monteagle
Sewanee
Decherd
Cowan
Tracy City
Oak Grove
Rowark Cove
Greenhaw
Alto
Gum Creek
Capitol Hill
Wilder Chapel
Bruner Crossing
Georgia Crossing
St. Andrews
Franklin Co.
Underground pipeline
Mt. View
Sanders Crossing
BRYANT RIDGE
Griffith Creek
Condra
Shirleyton
Mt. Olive
Victoria
Sequatchie
Comfort
Smithtown
Jasper
Ebenezer
Kimball
South Pittsburg
Burns Island
Sherwood
Sinking Cove
Tracy Cove
Mitchell Cove
Indian Cove
Big Ridge
Pryor Cove
Sweden Cove
Goodsticks Cove
Holly Flat Cove
Little Cedar Mtn.
Mineral Springs
To Sequatchie
To Widows Crk.
Scale in Feet
2000
0
2000

Fig. 2.2-2

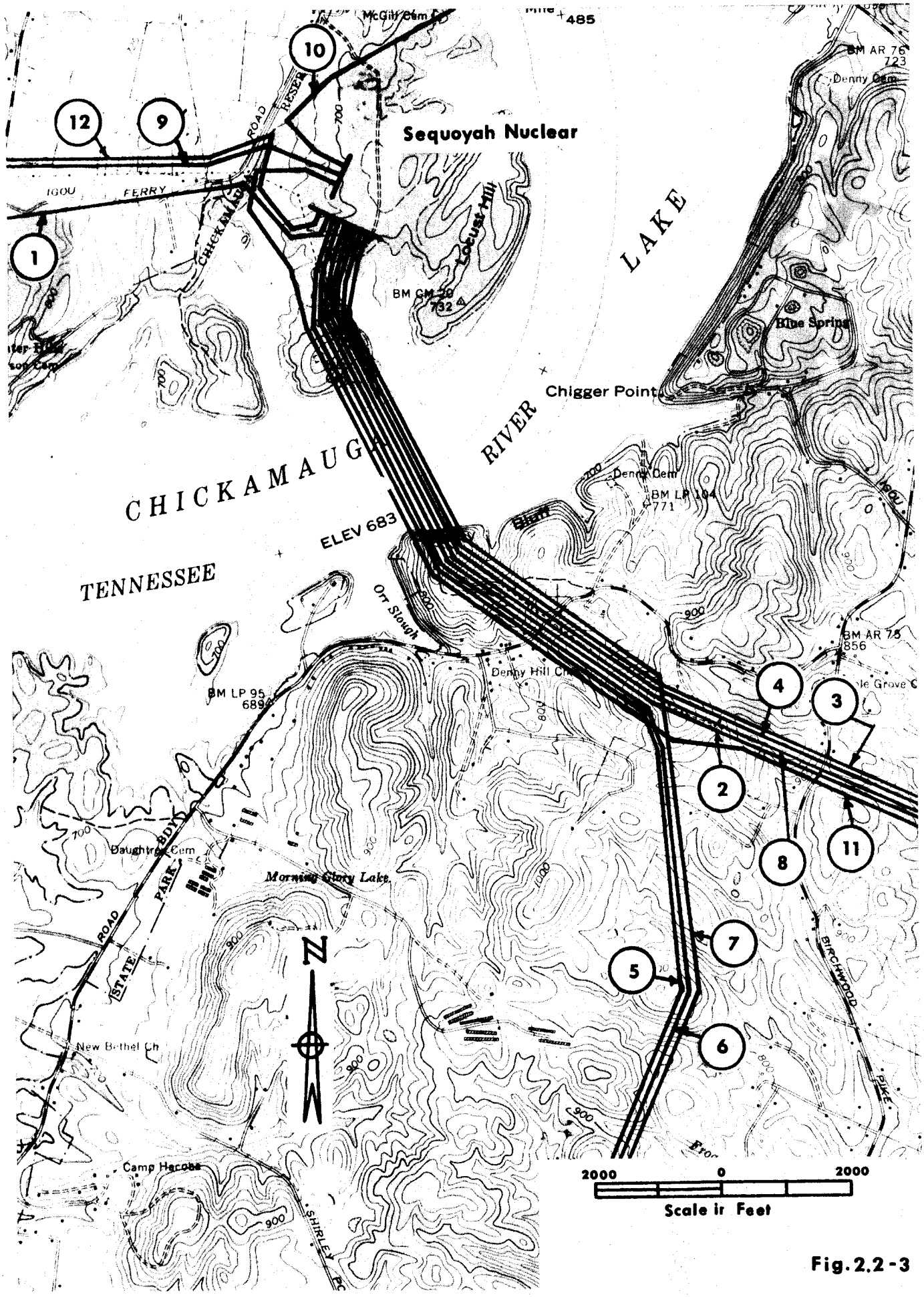
Sequoyah Nuclear
CHICKAMAUGA
RIVER
LAKE
TENNESSEE
Chigger Point
Blue Spring
Locust Hill
ELEV 683
Orr Slough
Denny Cem
Denny Hill Ch
Daughtry Cem
Morning Glory Lake
New Bethel Ch
Camp Hacoba
FERRY
ROAD
STATE
PARK
BDY
SHIRLEY
BIRCHWOOD
PIKE
McGill Cem
BM AR 76
BM LP 104
BM LP 95
BM AR 75
N
1
2
3
4
5
6
7
8
9
10
11
12
2000
0
2000
Scale in Feet

Fig. 2.2-3

2.3 Radiological Effects of Accidents - To aid in developing the overall balancing of environmental costs and benefits of the Sequoyah Nuclear Plant, an assessment has been made of the consequences that might result from the occurrence of postulated accidents. In order to appraise realistically the environmental risks of postulated radiological accidents, parameters, physical characteristics, and phenomena which reflect the present state of the art have been used in the analyses. Best estimates are used where experimental evidence is not sufficient to describe a situation. This approach to the analyses is therefore different from that used in safety analysis reports where conservative values are used to establish limits for design bases.

In accordance with AEC requirements, TVA has submitted with its application for permits to construct units 1 and 2 a safety analysis report which describes the technical features of the plant and the provisions for ensuring the health and safety of the public. The analyses presented in this safety analysis report demonstrate that even for postulated accidents of great severity analyzed using highly conservative assumptions, the radiological consequences would be within the reference values of 10 CFR Part 100.

Those postulated accidents having the potential for uncontrolled release of radioactive material to the environment have been divided by the Atomic Energy Commission into nine classes based on the systems involved and the type and potential consequences of the release. These classes are shown in Table 2.3-1. The accident analyses presented in Appendix G are based on the guidance given by AEC in the proposed annex to Appendix D, 10 CFR Part 50,[1] and contained in Regulatory Guide 4.2.[2]

This approach will allow comparison between reactors of different types at different sites.

In order to assess risk, some measure of probability is require In general, TVA believes that certain "accidents" may reasonably be expected to occur during the lifetime of the plant. These (accident subclasses 1.0, 2.0, and 5.1) are included in the estimates of routine radioactive discharges. The accidents in classes 3.0, 4.0, and 5.0 are not expected to occur during the 40-year lifetime of the plant. Accidents in classes 6 and 7 are less probable than those in classes 3.0, 4.0, and 5.0 but still are possible. The probability of occurrence of class 8 accidents is very small. The postulated occurrences is class 9 involve sequences of successive failures more severe than those required to be considered in the design basis of protection systems and engineered safety features. Their consequences could be severe. However, the probability of their occurrence is so low that their environmental risk is extremely small. Defense in depth (multiple physical barriers), quality assurance for design, manufacture and operation, continued surveillance and testing, and conservative design are all applied to provide and maintain the required high degree of assurance that potential accidents in this class are, and will remain, sufficiently low in probability that the environmental risk is extremely small.

Appendix G of this statement, "Outline of Accident Analyses," describes the accidents analyzed and the more important assumptions. In general, coolant activities are based on 0.5 percent failed fuel (as indicated by reference 1), atmospheric dispersion values are based on those given in AEC Regulatory Guide No. 1.4[3] (see Appendix G), and

fuel element fission product inventories are calculated using the model given in TID-14844.[4] Doses to hypothetical individuals at the minimum exclusion distance (1,824 feet) and the dose commitment to the population within 50 miles of the plant are presented in Table 2.3-2. A more detailed discussion is given in Appendix G. Reasonable assumptions other than those given in reference 1 can be used to calculate releases, but the conclusions as to the environmental risks due to postulated radiological accidents will be similar.

Table 2.3-2 indicates that the realistically estimated radiological consequences of the postulated accidents would result in exposures of an assumed individual at the site boundary to concentrations of radioactive materials within the yearly dose limits of 10 CFR Part 20. Table 2.3-2 also shows that the estimated integrated exposure of the population within 50 miles of the plant from each postulated accident would be orders of magnitude smaller than that from naturally occurring radioactivity, which corresponds to approximately 160,000 man-rem/yr based on a natural background level of 0.145 rem/yr. When multiplied by the probability of occurrence, the annual potential radiation exposure of the population from all the postulated accidents is an even smaller fraction of the exposure from natural background radiation and, in fact, is well within naturally occurring variations in the background. It is concluded from the results of the analysis that the environmental risks due to postulated radiological accidents are exceedingly small.

The AEC is currently performing a study to assess, more quantitatively, the risks from nuclear accidents. The initial results of these efforts are expected to be available in early 1974. This study is called the Reactor Safety Study and is an effort to develop realistic data on the probabilities and sequences of accidents in water cooled power reactors in order to improve the quantification of available knowledge related to nuclear reactor accident probabilities. The Commission has organized a special group of about 50 specialists under the direction of Professor Normal Rasmussen of MIT to conduct the study. The scope of the study has been discussed with EPA and described in correspondence with EPA which has been placed in the AEC Public Document Room (letter, Daub to Dominick, dated June 5, 1973).

As with all new information developed which might have an effect on the health and safety of the public, the results of these studies will be made public and will be assessed on a timely basis within the AEC regulatory process on generic or specific bases as may be warranted.

REFERENCES FOR SECTION 2.3

1. "Consideration of Accidents in Implementation of the National Environmental Policy Act of 1969," Federal Register, Volume 36, No. 231 (December 1971), p. 22851.

2. U.S. Atomic Energy Commission, Regulatory Guide 4.2, Preparation of Environmental Reports for Nuclear Power Plants, March 2, 1973.

3. U.S. Atomic Energy Commission, Regulatory Guide No. 1.4, "Assumptions Used for Evaluating the Potential Radiological Consequences of a Loss-of-Coolant Accident for Pressurized Water Reactors."

4. DiNunno, et al,, TID-14844, "Calculation of Distance Factors for Power and Test Reactor Sites."

Table 2.3-1

CLASSIFICATION OF POSTULATED ACCIDENTS AND OCCURRENCES

No. of Class	Description	Example(s)
1	Trivial incidents	Small spills Small leaks inside containment
2	Miscellaneous small releases outside containment	Spills Leaks and pipe breaks
3	Radwaste system failures	Equipment failure Serious malfunction or human error
4	Events that release radioactivity into the primary system	Fuel failures during normal operation; transients outside expected range of variables
5	Events that release radioactivity into the secondary system	Class 4 & heat exchanger leak
6	Refueling accidents inside containment	Drop fuel element Drop heavy object onto fuel Mechanical malfunction or loss of cooling in transfer tube
7	Accidents to spent fuel outside containment	Drop fuel element Drop Heavy object onto fuel Drop shielding cask--loss of cooling to cask Transportation incident onsite
8	Accident initiation events considered in design-basis evaluation in the Safety Analysis Report	Reactivity transient Rupture of primary piping Flow decrease--steamline break
9	Hypothetical sequences of failures more severe than Class 8	Successive failures of multiple barriers normally provided and maintained

Table 2.3-2

SUMMARY OF RADIOLOGICAL CONSEQUENCES OF POSTULATED ACCIDENTS

lass	Event	Individual Doses At the Exclusion Distance (Fraction of 10 CFR 20 Limit)	Dose Commitment To Population (Man-Rem)
.0	Trivial incidents	*	*
.0	Small releases outside containment	*	*
.0	Radwaste system failures		
3.1	Equipment leakage or malfunction	1.3×10^{-1}	8.5×10^{0}
3.2	Release of waste gas storage tank contents	5.2×10^{-1}	$3.4 \times 10^{+1}$
3.3	Release of liquid waste storage tank contents	2.6×10^{-4}	$3.3 \times 10^{+1}$
0	Fission products to primary system (BWR)	NA	NA
0	Fission products to primary and secondary systems (PWR)		
5.1	Fuel cladding defects and steam generator leaks	*	*
5.2	Offdesign transients that induce fuel failure above those expected and steam generator leak	4.0×10^{-3}	3.7×10^{-1}
5.3	Steam generator tube rupture	2.1×10^{-1}	$1.5 \times 10^{+1}$
0	Refueling accidents		
6.1	Fuel bundle drop	6.4×10^{-3}	4.6×10^{-1}
6.2	Heavy object drop onto fuel in core	1.4×10^{-1}	$9.9 \times 10^{+}$

valuated as routine release in Section 2.4

Table 2.3-2

SUMMARY OF RADIOLOGICAL CONSEQUENCES OF POSTULATED ACCIDENTS
(Continued)

Class	Event	Individual Doses At the Exclusion Distance (Fraction of 10 CFR 20 Limit)	Dose Commitment To Population (Man-Rem)
7.0	Spent fuel handling accident		
7.1	Fuel assembly drop in fuel storage pool	6.4×10^{-3}	4.6×10^{-1}
7.2	Heavy object drop onto fuel rack	7.1×10^{-3}	5.5×10^{-1}
7.3	Fuel cask drop	2.1×10^{-3}	1.6×10^{-1}
8.0	Accident initiation events considered in design basis evaluation in safety analysis report		
8.1	Small loss-of-coolant	7.0×10^{-4}	8.3×10^{-2}
8.1	Large loss-of-coolant	2.9×10^{-1}	$3.3 \times 10^{+1}$
8.1a	Instrument line break	NA	NA
8.2(a)	Rod ejection accident	4.4×10^{-2}	8.1×10^{0}
8.3(a)	Small MSLR	2.4×10^{-3}	4.6×10^{-1}
8.3(a)	Large MSLR	2.4×10^{-3}	4.6×10^{-1}

2.4 Radioactive Discharges -

1. Waste management - TVA's policy is to keep the discharge of all wastes from its facilities, including nuclear plants, at the lowest practicable level by using the best and highest degree of waste treatment available under existing technology, within reasonable economic limits.

This policy will be implemented at Sequoyah by improving plant design, by including extended holdup capacity for gaseous radwaste and by recycling liquid wastes containing tritium. With this additional processing, radioactivity in all effluents will be reduced to very low levels. Population dose rates due to these low-level discharges are considered to be unmeasurable with existing measurement techniques. Calculated doses to the population are given below in section 2.4.4.

The radioactive waste systems are designed to process the radioactive solid, gaseous, and liquid process wastes generated during plant operation. Solid wastes will be disposed of offsite in accordance with AEC regulations. Gaseous wastes will be processed, allowed to decay, and released to the local atmosphere at concentrations which will be below established regulatory limits. Liquid wastes, depending on their chemical content and level of radioactivity, will be processed and discharged to the reservoir, processed and recycled for plant use, or solidified and shipped for offsite disposal.

Gases and liquids will be analyzed before being released or monitored and/or sampled during release. Records will be maintained of concentrations and quantities released.

A detailed discussion of the waste processing equipment itself is not undertaken here since it will be evaluated in the context of the 10 CFR Part 50 licensing procedure. Sections (1), (2), (3), and (4) below describe the handling of liquid radwaste, tritiated water, solid radwaste, and gaseous radwaste. Section (5) describes the extended treatment of gaseous radwaste. Section (6) describes the extended treatment provided for a steam-generator primary-to-secondary leak.

(1) Liquid radwaste system - The liquid waste system will process radioactive waste water in the following general categories:

Miscellaneous tritium-containing waste

Miscellaneous waste

Detergent-containing waste

Spent fuel shipping cask decontamination waste

Liquids in these categories will be collected in separate tanks and sampled and analyzed prior to treatment.

The tritium-containing water will be processed by evaporation. The distillate, containing essentially all of the tritium and a small fraction of other radioactive constituents of the evaporator feed, will be recycled to storage tanks for reuse in the plant as described in section (2).

Miscellaneous waste water containing little or no tritium and with a radioactivity concentration of less than 10^{-4} uCi/ml will be processed by filtration and released to the plant condenser cooling water discharge provided its chemical quality meets applicable criteria for release. Liquid whose radioactivity content is above

10^{-4} uCi/ml and containing no chemicals harmful to an evaporator will be processed with the auxiliary waste evaporator or the waste evaporator to lower the radioactivity below 10^{-4} uCi/ml and then released. Liquid whose activity is above 10^{-4} uCi/ml and whose chemical content precludes evaporator processing will be solidified and packaged for offsite disposal.

It is expected that the following liquid wastes would not be processed by evaporation:

	Volume gal/yr	Expected Concentration uCi/ml	Total Activity uCi/yr
Laundry and hot shower	240,000	10^{-4}	9.0×10^{4}
Hot laboratory rinses	32,000	10^{-4}	1.2×10^{4}
Decontamination liquid	16,000	10^{-4}	0.6×10^{4}
Cask decontamination liquid	350,000	10^{-5}	1.3×10^{4}
	638,000		1.2×10^{5}

Detergent-containing waste water is normally low in radioactivity content and will be processed by filtration. If analysis shows the filtered liquid meets discharge limits, it will be released to the discharge pipe. If above limits, the liquid will be reprocessed. Although this liquid will normally be low in radioactivity, it is not considered desirable to process it through the sewage treatment facility since to do so would radioactively contaminate the facility. While such contamination would be slight, it is considered that the disadvantages of such contamination would outweigh any benefits derived.

The liquid radwaste system is shown schematically in figure 2.4-2. Equipment which is normally used in the processing of radioactive liquid includes the following:

1. Waste evaporator
2. Auxiliary waste evaporator
3. Waste evaporator condensate demineralizer
4. Waste evaporator condensate filter
5. Floor drain filter
6. Waste condensate tank filter

Of these, items 1, 3, and 4 are normally used in the treatment of liquid for recycle, and their performance does not affect radioactivity releases. Characteristics of the listed components are given in Table 2.4-4.

Routine liquid releases are expected to be such that the radioactivity content of the diluted stream during release will be less than 10^{-7} uCi/ml. The average annual concentration will comply with applicable AEC standards. Administrative procedures such as sampling, analysis, and specific release authorization will be in effect. These procedures are considered sufficient to prevent unauthorized or inadvertent releases.

Table 2.4-1 summarizes the estimated annual quantities of liquid discharges from various sources within the plant. Table 2.4-2 shows the estimated annual release rate of radioactive material on an identified isotopic basis, assuming operation with 0.25 percent failed fuel.

(2) Tritium recycle - To minimize discharge of tritium, all tritiated water sources will be recycled by segregating drains which contain tritium from those which do not. Any liquid which shows a tritium concentration which is higher than 10 percent of the concentration of the primary coolant will be recycled and not released. Such a criterion is necessary because it is not practicable to store and recycle all liquid that contains traces of tritium. A

variable, rather than a fixed, dividing line has been selected because it permits operating procedures that are reasonably consistent throughout the plant life. A fixed dividing line would permit discharging a large fraction of the liquid waste during the early portion of plant life but would result in an ever-increasing inventory of tritiated liquid in later years. During periods of operation with steam-generator leaks, operating procedures will be implemented to assure that, during these periods tritium levels in condenser air ejector effluent, steam-generator blowdown permeate are within limits set forth in applicable regulations. Routine tritium discharge in liquid effluent are expected to be at a concentration below 5×10^{-6} uCi/ml on an annual average basis.

Recycling of tritium will be continued as long as the primary coolant activity remains at a level determined to be safe from an operating personnel dose standpoint. While flexible, the corresponding concentration has been tentatively set at 2.5 uCi/ml for analysis purposes. Bases on the assumptions used for estimating routine releases, this level would be reached about 8 years after startup. The magnitude of this concentration will be unaffected by tritium recycle; however, the time required to reach maximum concentration will be shorter than if tritiated water were released. After the maximum concentration is reached, enough tritiated water will be extracted from the primary system to maintain the primary coolant activity at a safe level. Tritiated water bled from the primary system will be disposed of, as necessary, at an AEC-approved disposal site.

Tritium concentrations within the plant will be determined by the level which will constitute a safe working environment for personnel involved in refueling operations and normal power operations. TVA will continue its investigations into the questions posed by tritium recycle and the transfer of tritiated water to an AEC-approved disposal area. If future developments indicate that it is desirable to permit controlled releases of tritium, TVA will modify its operation accordingly.

(3) Solid radwaste system - The solid radwaste system will collect, process, store, package, and prepare for shipment solid radioactive waste materials produced through operation of the two reactor units.

Wet solid wastes will be packaged in radioactive waste disposal containers. Concentrates from the waste evaporator, spent demineralizer resins, and other semiliquid wastes will be pumped into containers previously filled with a mixture of filler and binder.

Dry solid wastes, such as contaminated rags, paper clothing, spent filter elements, laboratory apparatus, small parts and equipment, and tools will be collected in suitable containers placed throughout the plant. Compressible wastes are to be packed into 55-gallon drums with a baling machine. Large-sized contaminated items will be encapsulated in steel containers or encased in concrete.

The wet solids and dry solids will be packaged and shipped from the plant in accordance with applicable AEC requirements, Department of Transportation regulations, and the regulations of those states through which the wastes pass en route to the disposal area. Transportation of the solid radwaste is discussed in section 2.1.

Piping and other required equipment are provided to facilitate the use of large shipping containers for packing and shipping spent resins. Resin slurry will be routed from the resin manifold in the drumming room through shielded piping to the cask loading area. The shipping container is connected to the shielded pipe using flexible hose and quick disconnects. For the resin loading operation the shipping container with shield in place is located on the transport unit. The resin is dewatered through disposable filters mounted inside the shipping container. These are disposed of with the resin. The filtered effluent from the shipping container drains by gravity to the tritiated drain tank in the waste disposal system. A flexible hose equipped with quick disconnects is provided to connect the cask with the drain line. The capability for flushing the resin line to the cask is provided in the existing design. The loading operation may be viewed through the hatch in the floor above the cask loading area.

(4) Gaseous radwaste system - The gaseous radwaste system will collect and process gaseous radioactive wastes originating from degassing of reactor coolant, displacement of cover gases as liquids accumulate in various tanks, miscellaneous equipment vents and relief valves, and sampling operations and automatic gas analysis for hydrogen and oxygen in cover gas. These waste gases will be collected, compressed and dehumidified, and stored in gas decay tanks for a minimum of 60 days (see Extended Treatment of Gaseous Radwaste below). Cover gases in the nitrogen blanketing system will be reused to minimize gaseous wastes. After decay, the only significant radioisotopes released to the environment will be ^{85}Kr, ^{131}I, ^{131m}Xe,

and ^{133}Xe. The estimated annual releases of these isotopes are shown in Tables 2.4-2 and 2.4-3. Each gaseous decay tank will have provisions for sampling the tank contents before beginning a release.

During normal operations, gases will be discharged intermittently at a controlled rate through vent pipes which discharge near the top of the reactor building. One release point is through and near the base of the unit 1 shield building dome, and the other is through and near the base of the unit 2 shield building dome. The dome release points are considerably higher than the other plant building roofs. The shield buildings are located on a north-south axis. The other plant buildings lie between the shield buildings and to the west of the shield building axis. The vents are located in the northeast and southeast sectors, respectively, of the unit 1 and unit 2 shield building domes. Waste gas from the gas decay tanks can be discharged through either of the two vents. Thus, regardless of wind direction, it will usually be possible to select one of the two release points such that waste gas flow is not toward the other plant buildings. Even in the event gases are being released from one of the two vents under atmospheric conditions when air flow is from the east, the released gases must pass around or over the shield building dome. If these radioactive gases should enter plant buildings, they would be detected by inplant radiation monitors, and the release would be terminated if necessary.

During periods in which gaseous radioactive wastes are discharged from the plant, discharge rates will be determined based on analyses of the waste gases and previously determined meteorological dispersion coefficients. Activity levels in the vent pipe

are monitored by a radiation detector with an annunciator and alarm system provided in the control room. A high activity alarm will isolate the vent pipe terminating the release. Releases will be made during favorable dispersion conditions to the fullest possible extent while maintaining the operating flexibility necessary for plant operation. Administrative procedures will provide adequate protection against inadvertent or unauthorized releases of gaseous radwaste. Since releases are batch operations, specific approval will be required before actual release can be inititated.

A continuous sample will be drawn from the condenser air ejector exhaust and monitored by a scintillation crystal photomultiplier detector for gaseous activity indicative of a primary-to-secondary system leak. Excessive activity will be indicated, recorded, and alarmed in the main control room so that action may be taken to correct the cause of a primary-to-secondary leak. The section on Extended Treatment for Steam Generator-Leak below gives TVA's approach to this operating condition. The condenser air ejector exhaust will routinely pass through the offgas filter system which consists of HEPA filters and charcoal adsorbers, irrespective of primary to secondary leakage. The only exception will be during initial evacuation of the condenser before steam admission on each turbine startup when gas flow rate exceeds the capacity of the filters and adsorbers. The offgas carbon adsorber has a DF of 100 for elemental iodine and 20 for methyl iodine. The adsorber is a 2-inch-deep bed with a face velocity of less than 40 ft/min. The steam generator has a decontamination factor of 100 for iodine, and the condenser has a decontamination factor of 2,000.

The radiation monitors have a lower detection limit of 10^{-7} uCi/ml of noble gases. With an ejector flow rate of 20 ft^3/min per unit, a daily undetected release of 0.00016 Ci could occur from both units, or 0.05 Ci per year.

The auxiliary building ventilation systems will provide ventilation for all areas of the auxiliary building, including the refueling area, the waste-packing area, and the cask-loading area. The ventilation systems will normally discharge air through HEPA filters before exhausting through the auxiliary building exhaust vent. The auxiliary building exhaust vent will be fitted with a monitor identical to those to be installed in the shield building vent pipes so that gaseous, particulate, and radioiodine discharges will be continuously monitored and recorded. An excessive activity level in this vent will be alarmed in the control room. The settings for the radiation level in the exhaust duct will be about:

Gas activity	1×10^{-4} uCi/cc
Iodine activity	1×10^{-6} uCi/cc
Particulate activity	1×10^{-6} uCi/cc

A more sensitive laboratory analysis will be performed in order to monitor iodine. The exhaust flow rate is about 160,000 ft^3/min. About 6.5 Ci per day or 2,000 Ci per year of noble gases could escape detection. On detection of high vent activity, the normal auxiliary building ventilation system will be automatically isolated and the auxiliary building gas treatment system will be placed into operation. This system will provide for carbon adsorption and filtration of the effluent from the auxiliary building. The single-bank carbon adsorber will have a decontamination factor of 100 for elemental iodine and 20 for organic

iodine. These factors decrease for low concentrations of iodine; however, any release of radioactive iodine will be accompanied by a release of a substantial amount of stable iodine that also results from the fission process. Thus, the concentration of iodine in the gas stream should be considerably above that estimated as radioactive iodine and the reduction in adsorbtion due to low concentration would thus be precluded. After passing through the auxiliary building gas treatment system, the gases will be discharged through one of the shield building vent pipes.

Purging of the containment buildings will produce exhaust gases which will probably contain radioactive material. The containment purge exhaust will be processed through HEPA filters and full-flow charcoal adsorbers identical to those in the auxiliary building gas treatment system.

This release is monitored by the shield building gas monitor which continuously measures and records gaseous, particulate, and radioiodine discharges. The monitor's lower detection limit is 10^{-6} uCi/ml of noble gases. Assuming that five containment volumes (containment volume = 1,142,000 ft^3) are used to purge the containment, and that each containment is purged four times per year, the annual undetected release is approximately 1.3 Ci.

(5) <u>Extended treatment of gaseous radwaste</u> - Since it is TVA's policy to keep the discharge of all wastes from its facilities at the lowest practicable levels, the decision has been made to increase the holdup time in the gas decay tanks from 45 days to 60 days. The effect of this change on the gaseous releases is shown in

Table 2.4-3. Due to the 10.76-year half-life of ^{85}Kr, the additional holdup time has little effect on the release of this isotope. However, ^{133}Xe releases are reduced by about 90 percent and ^{131m}Xe releases by about 60 percent with the additional 15-day holdup.

A continuous record of all gaseous emissions from the plant will be maintained. The emission rates from all sources will be summed so that the total emission from the plant does not exceed the appropriate regulations.

(6) Extended treatment for steam-generator leak - The limiting radioactive release from a steam-generator primary-to-secondary leak would be from liquid blowdown and condenser air ejector effluents.

A number of operating PWR's have experienced primary-to-secondary leakage. An investigation by Westinghouse Electric Corporation has revealed that this leakage stems from failure to maintain secondary side chemistry within prescribed limits. The studies have shown that it is important to keep the molar ratio of $Na:PO_4$ below 2.6. In order to maintain proper secondary side chemistry, Westinghouse has recently recommended that phosphate be added continuously to each steam generator and that a continuous blowdown flow of at least 5 gal/min be maintained for each steam generator. Results of the investigation show that adherence to these recommendations will make primary-to-secondary leakage unlikely.

TVA has initiated changes in the plant design to permit compliance with the recommendations while retaining the capability of treating the blowdown in the event that it contains radioactivity. The original design as described in the Sequoyah PSAR has been modified as follows:

1. The flash tank is being replaced with a blowdown heat exchanger for each unit.
2. A reverse osmosis unit is being added to each unit to divide the blowdown stream into a relatively clean permeate stream and a concentrates stream.
3. A demineralizer is being added to each unit to treat the permeate stream, if necessary.
4. A tank is being added to collect the concentrates from both reverse osmosis units.

As a result of these changes, the capacity to treat radioactive blowdown from both units has been increased from about 12 gal/min to 120 gal/min.

As a result of the above system changes and equipment additions, the radioactivity concentrations in a steam generator resulting from a given primary-to-secondary leak will be reduced. This would result in a reduction of radioactivity releases. While the calculated doses shown in section 2.4.4 do not reflect the installation of a reverse osmosis blowdown treatment system, it is expected that the actual dose levels will be less than those shown in section 2.4.4 as a result of the revised blowdown treatment system.

The system is shown schematically in figure 2.4-6. The blowdown heat exchanger will cool the blowdown to a temperature of 95°F or less at the maximum flow rate of 60 gal/min. When the blowdown contains detected radioactivity, it will be passed through the reverse osmosis unit. The clean stream (permeate) leaving the unit represents about 90 percent of the incoming flow, while the

concentrate represents about 10 percent. The permeate will be passed through the demineralizer, if necessary, and will be recycled to the condenser hotwell or discharged. The concentrate, which contains most of the radioactivity, will be collected in the RO concentrates tank, from which it will be fed to the auxiliary waste evaporator. The evaporator bottoms will be packaged, and the distillate will be recycled to the condenser hotwell or be discharged. The equipment can process blowdown flows up to 60 gal/min per unit.

It is expected that for most of the time primary-to-secondary leakage will be essentially zero. Under such conditions the blowdown liquid will be discharged without treatment or will be treated with the reverse osmosis equipment depending on the amount of secondary system makeup water needed and the relative economics of producing the makeup using a demineralizer or the reverse osmosis unit. The use of the procedure in which the reverse osmosis unit is employed and the concentrates are discharged would reduce the amount of demineralized water makeup required. If the blowdown liquid is treated with the reverse osmosis unit, the permeate will be recycled to the condenser hotwell and the concentrates will be discharged. In either case, the discharge stream and the blowdown stream will be monitored for radioactivity.

Redundant radiation monitors will be provided to monitor the discharge stream when the discharge is in service. A third monitor will be in use continuously to monitor the combined or individual blowdown streams from the steam generators. Controls will be provided to ensure that the discharge valve cannot be opened unless the monitors are in service. The monitoring system will be backed up

by periodic laboratory analyses of blowdown liquid. Laboratory analysis will permit detection of leaks too small to be detected by the monitors. In normal service, the operator will be aware of the radioactivity concentration in the blowdown and of any changes in the concentration. The system will be placed in the complete-treatment mode when the concentration, excluding tritium in the blowdown stream reaches 5×10^{-6} uCi/ml. In the event of a sudden and sizable steam generator tube rupture which causes the concentration to increase rapidly, an alarm will alert the operator at a discharge concentration of 5×10^{-5} uCi/ml. Blowdown will be terminated automatically if the radioactivity concentration in the discharge reaches 10^{-4} uCi/ml. Blowdown flow will be resumed after the system has been placed in the complete-treatment mode.

The radioactivity release will be the same regardless of which discharge mode is employed. On the basis of an average blowdown rate of 30 gal/min per unit, a load factor of 0.8, and a radioactivity concentration of 5×10^{-6} uCi/ml in the untreated blowdown, the annual release from both units would be about 0.49 Ci. With an average cooling tower blowdown flow rate of 70 cfs, the concentration in the plant effluent would be about 1×10^{-8} uCi/ml. Actual releases are expected to be lower.

The level at which the blowdown monitor will close the blowdown valves (10^{-4} uCi/ml) is such that the concentration in the plant discharge on an annual average basis is below the 2×10^{-8} uCi/ml when the blowdown flow is as high as 120 gal/min for two units. Blowdown and discharge analyses are performed daily. If a leak occurred immediately after sampling, and if a concentration of

10^{-4} uCi/ml existed undetected for 24 hours in a blowdown flow of 120 gal/min, the total release would be .066 Ci. Even such a small release is unlikely because the monitor reading will be noted at each shift, and corrective action (e.g., place treatment system in operation) will be taken.

In operation with a primary-to-secondary leak, the secondary system will become contaminated with radioactive material and chemicals from the primary system. The buildup will continue until an equilibrium is achieved or until the unit is shut down and the leak is repaired. Noble gases, along with some of the iodine, will be released via the condenser air ejector offgas during such operation.

The condenser offgas will be passed through a HEPA filter and a charcoal adsorber regardless of whether a primary-to-secondary leak exists. Both particulates and iodine will be reduced. The offgas will be monitored with a radiation monitor which responds to the noble gases present. The monitor will be set to alarm at a concentration of about 6×10^{-5} uCi/ml. The offgas monitor will serve as a warning device and will exercise no control function.

Since radioactivity releases as liquid are low with this blowdown treatment system, the length of time that operation can be continued with primary-to-secondary leakage is determined primarily by the offsite doses due to radioactivity in the condenser offgas.

During operation with a primary-to-secondary leak, tritium, in the form of HTO, is one of the radioactive

materials that accumulate in the secondary system. The tritium concentration increases in the secondary system as long as the primary-to-secondary leak exists. When the leak has been repaired and blowdown discharge is resumed, the tritium concentration decreases. Use of the reverse osmosis equipment prolongs the period during which tritium is present in the secondary system.

To avoid the release of tritium-containing blowdown liquid, all of the liquid, whether contaminated with radioactivity or not, would have to be treated and recycled to the secondary system. The annual cost of treating all of the blowdown liquid would be about $18,500. If all of the blowdown liquid had a radioactivity concentration of 5×10^{-6} uCi/g, the tritium content would be less than 0.3 curies per year. An expenditure of $18,500 to avoid a release of only 0.3 curies is not warranted. Moreover, TVA prefers not to operate the auxiliary waste evaporator on a continuous basis if it can be avoided. The amount of maintenance that must be performed on equipment of this type is in proportion to the throughput, and continuous usage would increase the probability of the evaporator's not being available when needed. Recycle of the tritium-containing liquid to the primary system would not be feasible, since even traces of sodium and other chemicals that are present in the blowdown would be objectionable in the primary system.

Storage of blowdown liquid is not practical since the annual volume is in excess of 30,000,000 gallons.

TVA considers that a commitment to process all blowdown containing more than 5×10^{-6} uCi/g will result in releases which are "as low as practicable."

One of the advantages of the reverse osmosis system over the original blowdown treatment system is that substantially higher blowdown rates can be employed during operation with primary-to-secondary leakage. Figure 2.4-7 shows the effect of blowdown rate on the gross radioactivity concentration in the steam generators. Figure 2.4-8 shows the effect of blowdown rate on iodine-131 releases from the secondary system.

Table 2.4-5 gives isotopic concentrations in the steam generators for the conditions of 0.25 percent of the fuel leaking radioactivity, 110 pounds per day primary-to-secondary leakage, 30-gal/min blowdown per unit for 1 year. The tritium concentration in the primary system is assumed to be 2.5 uCi/g.

2. Alternative waste treatment - The original liquid waste disposal system (Figure 2.1), was modified to provide treatment which reduces releases to a level which is as low as practicable. Discharge of tritiated water is minimized by recycling tritium within the primary system. This represents the most feasible resolution of minimizing tritium releases since providing storage for all tritiated water would be totally impractical.

Among the alternative methods of gaseous waste treatment considered was the addition of hydrogen recombiners, the use of a cryogenic distillation system, and the increasing of intank holdup period from 45 days to 60 days.

Recombination of the hydrogen in the gaseous radwaste system with oxygen would reduce the volume of gas to be stored and the holdup time could be extended for a year or more.

Due to the long half-life of krypton-85, the additional holdup time has little effect on the releases of this isotope. Because krypton-85 is the predominant isotope present after 60-day holdup, the use of a hydrogen recombiner (shown in Figure 2.4-5) would have little effect on the total release. The estimated cost of the hydrogen recombiner system is $400,000.

Cryogenic distillation involves the liquefaction of radioactive gases at low temperature and storage onsite. The system (figure 2.4-4) would be installed in the vent line downstream of the gas holdup tanks. Its main advantage when compared to the 60-day gas decay tank system is that it removes more than 99 percent of the radioactivity remaining in the tank at the time of release.

Cryogenic systems for producing industrial oxygen were developed 30 to 40 years ago. However, the application of a cryogenic system at a nuclear power plant could have performance problems unrelated to those encountered in other industries. The problems associated with krypton-85 storage onsite and its eventual disposal must also be considered.

In the cryogenic extended radwaste treatment system krypton and xenon are removed from the vent gases and stored in tanks. The holdup of krypton-85 would increase the potential for the accidental release of the concentrated waste to the environment and would require long-term storage (greater than 60 days) and ultimate disposal of gaseous radioactive waste.

While the future potential of the cryogenic system may offer advantages, it has not been used for the treatment of radioactive gaseous wastes in large commercial nuclear power plants. As compared to simple gas decay holdup tanks, the cryogenic system is a

relatively complicated mechanical system utilizing pumps, compressors, refrigeration systems, piping, and tanks.

Because of the lack of experience with this type of service, some question exists as to the reliability of the cryogenic system. Its reliability would not be as high as that of the gas decay tanks which is essentially a passive system and has been used in radioactive gas treatment for nuclear plants similar in design to Sequoyah. The cryogenic distillation system is estimated to cost $600,000.

The gas absorption by solvent system shows promise for removing krypton and xenon from a gas stream by selective absorption in a fluorocarbon solvent. The performance and reliability of this type system has not been proven in nuclear plant service. The only experience to date with the absorption by solvent system has been with bench and pilot plant size systems. While this system shows promise for future application to nuclear plants, it was decided that further development would have to be done before it could become an acceptable alternative for large-scale applications such as Sequoyah. The estimated cost of the ORGDP system is $400,000.

The effect of the 60-day holdup as compared to 45-day holdup on gaseous radwaste release rate can be seen in Table 2.4-3. A comparison of the alternative systems' effect on annual doses is also shown in Tables I-2 and I-3.

TVA has concluded that the 60-day holdup alternative represents the best balance of economic cost, reduction in environmental impact, and feasibility. Therefore, the benefits to be gained by further reducing the radioactive gaseous releases are not commensurate with the cost associated with the reduction. To implement this conclusion TVA is

proceeding with the design and procurement for the 60-day gas decay tank alternative.

Three methods were considered for use in extended treatment of steam-generator blowdown: evaporation, ion exchange, and reverse osmosis. The reverse osmosis system was selected because its estimated cost is the lowest of the alternatives considered and because its environmental impacts are equal to or less than those of competing processes. In addition, both the evaporator and reverse osmosis system would reduce the amount of packaged solid wastes approximately 5,000 ft^3 per year when compared to a demineralizer system. The reverse osmosis system could be operated to provide low-cost secondary system makeup water during operation without primary-to-secondary leakage. This procedure could be accomplished at low cost and would reduce the amount of H_2SO_4 and NaOH used as regenerants in the makeup water treatment process. The installed cost of reverse osmosis equipment was estimated to be about $1,000,000. The cost of the auxiliary waste evaporator is not included in that figure since it was already a part of the plant. The installed cost of the demineralizer system was estimated to be about $950,000. The cost of the evaporator system was not estimated because it was known that it would not be competitive with the other two systems. The evaporators could not be fitted into the existing buildings and the cost of an additional building would be prohibitive. At 25-ppm total dissolved solids in the blowdown, the present worth of reverse osmosis operating costs is estimated to be about $130,000; for the demineralizer system the comparable figure is about $1,050,000. Since radioactivity and chemical releases for the two systems would be essentially the same, the lower cost system, reverse osmosis, was selected.

3. Environmental radiological monitoring program - The preoperational environmental radiological monitoring program has the objective of establishing a baseline of data on the distribution of natural and manmade radioactivity in the environment near the plant site. With this background information, it will then be possible to determine, when the plant becomes operational, the earliest possible indications of the accumulation or buildup of radionuclides.

Field staffs in TVA's Division of Environmental Planning and the Division of Forestry, Fisheries, and Wildlife Development carry out the sampling program outlined in Table 2.4-6, 2.4-7, 2.4-8 and 2.4-9. Sampling locations are shown in figures 2.4-9 and 2.4-10. All of the radiochemical and instrumental analyses are conducted in a central laboratory at Muscle Shoals, Alabama. Alpha and beta analyses are performed on a Beckman Low Beta II low background proportional counter. A Nuclear Data Model 2200 multichannel system with 512 channels is used to analyze the samples for specific gamma-emitting isotopes. Data are coded and punched on IBM cards or automatically punched into paper tape for computer processing specific to the analysis conducted. A digital computer is used to solve multimatrix problems associated with identification of gamma-emitting isotopes.

A study of environmental radiation levels was initiated in May 1971 and will continue through low-power testing and operation of the plant.

The environmental radiological monitoring program outlined herein is subject to change based on continued evaluation of the program now being conducted at the Browns Ferry Nuclear Plant and other available data. The program is coordinated closely with other agencies'

programs, such as the nationwide fallout sampling and water quality networks and the radiological health program of the State of Tennessee.

The program includes measurements of direct gamma radiation and sampling of airborne radioactivity, fallout particulate matter, rainfall, surface water, well and public water supplies, soil, vegetation, milk, fish, clams, bottom sediment, plankton, and river water. The extent to which various aspects of the program are carried out takes into account data available from other sources; however, the program as outlined is self-sufficient. It is continually evaluated to determine that the most sensitive vectors are being sampled to properly evaluate exposure of the population. Continual evaluation also allows planning an effective system with respect to sampling frequencies, locations, and laboratory analyses.

(1) Atmospheric monitoring - Twelve atmospheric monitoring stations have been established for the Sequoyah Nuclear Plant. Two of these monitors are located on the plant site in the two quadrants of greatest wind frequency. One additional station will be placed at the point of maximum predicted offsite concentration of radionuclides if this point varies significantly from present locations. Eight other stations are located at perimeter areas out to 10 miles. These stations are instrumented and telemeter data into the control room. Generally, these stations are located in or near the most densely populated areas within 10 miles of the plant in those quadrants having the greatest wind frequency on an annual basis (see figure 2.4-5). Two other monitors are located at distances out to 20 miles. These remote monitors are used as control or baseline stations. Samples of air, rainwater, and heavy particle fallout are collected routinely as indicated in Table 2.4-6.

The atmosphere is sampled for tritium at the Sequoyah Nuclear Plant. TVA has recently tested sampling methods, and plans have been made to incorporate a sampling apparatus into both the local and one of the remote monitoring stations.

(2) Terrestrial monitoring - Samples of milk, vegetation, soil, private well water, public water supplies, and food crops are collected within a 20-mile radius of the plant. Environmental gamma radiation levels are measured utilizing thermoluminescent dosimeters on a 500-foot grid within the plant boundaries and at each offsite air monitoring station.

During the preoperational phase of the monitoring program, milk is sampled from dairy farms near the plant on a monthly basis. After licensing of the plant, samples of fresh milk will be obtained weekly and analyzed for their iodine-131 content, during the seasons that animals producing milk for human consumption are on pasture. Locally processed milk is also sampled on a monthly basis. During periods of monthly milk sampling, if an increase in I-131 content is detected in other critical vectors such as vegetation, the frequency of milk sampling will be increased.

Consideration has been given to sampling animals such as cattle raised in the vicinity of the nuclear plant. Present plans are to sample vegetation on a monthly and quarterly basis. This vector would be the first indicator in the food chain to man through animals. If an increase above the natural background established during the preoperational monitoring program is detected, the program will be expanded to include other vectors in the food chain such as

beef cattle. Food crops grown by subsistence farms in the area are sampled during the growing season as is now being done at the Browns Ferry Nuclear Plant.

(3) Reservoir monitoring - Sampling will be carried out quarterly at ten river stations in Chickamauga and Nickajack Reservoirs. The stations will be located as indicated in figure 2.4-10 at Tennessee River miles (TRM) 496.50, 490.47, 484.1, 483.55, 480.82, 472.80, 465.40, 435.42, 425.48, and at a station which will be located 500 feet below the plant discharge (approximate location TRM 483.40). Samples collected for radiological analyses include bottom fauna (Asiatic clams) and plankton from five stations and sediment from ten. Samples of fish will be collected from Watts Bar, Chickamauga, and Nickajack Reservoirs. Further sampling information can be found in Tables 2.4-7, 2.4-8, and 2.4-9 and figure 2.4-10.

Samples of water, net plankton, sediment, Asiatic clams, and three species of fish are collected quarterly (plankton only during the two quarters of maximum abundance) and analyzed for radioactivity. Gamma, gross alpha, and gross beta activity are determined in water (dissolved and suspended fractions), net plankton, sediment, shells and flesh of clams, flesh of two commercial and one game fish species, and the whole body of one commercial fish species. Reservoir water samples are also analyzed for tritium. Except in the flesh of clams, white crappie, and channel catfish, Sr^{89} and Sr^{90} content is determined in all samples. The activity of at least ten gamma-emitting radionuclides is determined with a multichannel gamma spectrometer.

At present TVA considers that it is sampling those vectors which will give the first indication of increased radioactivity levels in the environment. If statistically significant increases above natural preoperational background are seen in those vectors being sampled, consideration will then be given to expanding the sampling program to include other biological parameters.

Consideration has been given to sampling migratory waterfowl. Since about 95 percent of waterfowl in southeast Tennessee are migratory, moving great distances in the winter and spring, it would be impossible to accurately ascribe radionuclides found in migratory waterfowl to a particular source such as the Sequoyah Nuclear Plant. Therefore, it seems more logical to sample other vectors in the environment.

(a) Water - Water samples are collected for determination of suspended and dissolved radioactivity from the eight stations.

Effluent concentrations are determined prior to release of liquid radioactive waste from the plant. The liquid radwaste holdup tanks are sampled prior to release and the concentration of the contents determined. Knowing the dilution water discharge flow rate and the concentration of the liquid in the radwaste tank, a release rate from the tank will be established which will not exceed applicable standards in the discharge pipe prior to release to the unrestricted area. A set point will be established on a radiation monitor downstream of the tank discharge line which will cause automatic isolation if the concentration in the line exceeds the previously established value. In addition, a sequential type sampler will continuously sample the effluent and be analyzed periodically to ensure that all other systems are functioning properly.

When considering these plant safeguards, the reservoir monitoring frequency is believed to be adequate.

Buildup of radioactivity in Chickamauga and Nickajack Reservoirs is not expected; however, if it does occur it will occur slowly over a long period of time. The frequencies established in the present program are satisfactory to detect this gradual effect. Possible leakages will be detected by the plant effluent monitoring system.

(b) Fish - Radiological monitoring will be accomplished by analyses of composite samples of adult fish taken from each of three contiguous reservoirs--Watts Bar, Chickamauga and Nickajack. No permanent sampling stations have been established within each reservoir; this reflects the movement of fish species within reservoirs as determined by TVA data from the Browns Ferry preoperational monitoring program. Three species, white crappie, smallmouth buffalo and channel catfish, will be collected. For each of the following composites, sufficient fish will be collected in each reservoir to yield from 250 to 300 grams oven-dry weight for analytical purposes:

- Flesh - white crappie
- Flesh - smallmouth buffalo
- Flesh - channel catfish
- Whole fish - smallmouth buffalo

All samples are collected quarterly and analyzed for gamma, gross alpha, and gross beta activity. Concentrations of Sr^{89} and Sr^{90} are determined on the whole fish and flesh of a smallmouth buffalo only, which are as nearly equal in size as available. The composite samples contain approximately the same quantity of flesh from each of the fish. For each composite a subsample of material is drawn for counting. The channel catfish is considered to be representative of piscivorous species of fish.

(c) Plankton - For radiological analyses, net plankton samples are collected at five stations by vertical tows with a 1/2-meter net (pore size, 80 microns). For analytical accuracy at least 50 grams (wet weight) of material is desirable, and collection of such amounts is practical only during the period April through September because of seasonal variability in plankton abundance. Samples are analyzed for gamma, gross alpha, and gross beta activity, and Sr^{89} and Sr^{90} content.

(d) Sediment - Sediment samples are collected from Ponar dredge hauls. Gamma, gross alpha, and gross beta activity and Sr^{89} and Sr^{90} content are determined in samples collected from ten stations. Each sample is a composite obtained by combining equal volumes of sediment from at least three dredge hauls collected at a point from each station.

(e) Bottom fauna - Asiatic clams are collected from inplace biomonitoring units at five stations and analyzed for gamma, gross alpha, and gross beta activity. The Sr^{89} and Sr^{90} content is determined on the shells only.

(4) Domestic water supplies monitoring - Domestic water supplies, such as small surface streams and wells, are sampled and analyzed. Well water is obtained from at least two farms

located near the plant. Since there are no public water intakes within 10 miles downstream of the plant, a continuous sample is taken at the nearest public water intake downstream of the plant and analyzed monthly for gross beta, tritium, and at least 10 specific gamma-emitting radionuclides.

(5) Quality control - The quality control program now in effect with the Tennessee Department of Public Health Radiological Laboratory and the Eastern Environmental Radiation Facility Environmental Protection Agency, Montgomery, Alabama, includes samples from the Sequoyah Nuclear Plant. Samples of air, water, milk, vegetation, and soil collected around the plant are forwarded to these laboratories for analysis. Results are exchanged for comparison.

4. Estimated increase in annual environmental radioactivity levels and potential annual radiation doses from principal radionuclides - Environmental radioactivity levels due to releases to unrestricted areas from the Sequoyah Nuclear Plant will be so low that the radiation doses to man will be less than the variations in the natural background radiation dose. However, TVA has calculated the expected increase in radioactivity levels and potential radiation doses to the population as a result of these low-level releases. Figure 2.4-11 shows exposure pathways which were considered.

(1) Radionuclides in liquid effluents - The following doses are calculated for exposures to radionuclides routinely released in liquid effluents:

1. Doses to man

   a. From the ingestion of water

b. From the consumption of fish

c. From water sports

2. Doses to terrestrial vertebrates from the consumption of aquatic plants

3. Doses to aquatic plants, aquatic invertebrates, and fish

The organisms and pathways that are considered in this report are those that are judged to be the most significant because of species, habitat, diet, or patterns of living. Conservative assumptions are applied in these analyses which should result in overestimation of the doses.

Internal doses are calculated using methods outlined by the International Commission on Radiological Protection which describe internal retention of radionuclides with a single-exponential model. This model is used for estimating the doses to the bone, G.I. tract, thyroid, and total body of man from ingestion of water and consumption of fish and for estimating the doses to terrestrial vertebrates from the consumption of green algae. For calculating the internal doses to aquatic organisms it is assumed that an equilibrium exists between the activity concentrations in the water and those inside the organisms.

External doses are estimated using either an infinite or a semi-infinite, homogeneous-medium approximation depending on whether the organism is considered to be immersed in or floating on the water.

A more detailed discussion of the analytical methods used in calculating these doses and a detailed listing of the results are given in Appendix H.

(2) Radionuclides in gaseous effluents -

The following doses to humans living in the vicinity of the Sequoyah Nuclear Plant are calculated for routine releases of radioactive gases:

1. External beta doses
2. External gamma doses
3. Thyroid doses due to inhalation of radioactive iodine
4. Thyroid doses due to concentration of radioactive iodine in milk produced near the site

The external beta and gamma doses to terrestrial plants and animals are considered to be of the same magnitude as the doses estimated for humans.

The gaseous effluents are released from vents located near the top of the plant buildings. Dilution of the gaseous effluents will take place due to diffusion and turbulent mixing as the gases travel downwind from the point of release. The downwind, ground-level concentrations of radionuclides are determined using a sector-averaged diffusion equation and meteorological data obtained at the Sequoyah site.

The principal effect of the topography in the Sequoyah area on the meteorological dispersion of effluent emissions is one of confinement to the downwind sectors of predominant wind. About 35 and 28 percent, respectively, of the effluent would be dispersed in the sectors northeast and southwest from the plant as a result of the upvalley-downvalley low-level wind. Therefore, relative ground-level concentrations would be expected to be higher in these sectors, particularly during periods of low wind and stable conditions. Also, with the relatively flat and undulating valley floor, there should be minimal discontinuity of the general low-level wind pattern from terrain roughness

or irregularity. Furthermore, differences in the ambient thermal or stability structure from differential surface heating between land and water should not cause significant alterations to the wind and stability patterns in the plant area.

External beta and gamma doses are computed using semi-infinite cloud, immersion dose models. Iodine inhalation doses are calculated by assuming that these doses are proportional to the ground-level concentration and the receptor breathing rate. Iodine ingestion doses are calculated by assuming that they are proportional to the rate of iodine deposition on pasturage, the concentration of iodine in milk, and the milk consumption rate of the receptor. Studies by TVA (Appendix I) and others[1] show that the iodine-milk pathway is the principal food-chain pathway for halogen and particulate release.

A more detailed description of the analytical methods used in calculating these doses and a detailed listing of results are given in Appendix I.

(3) Summary of radiological impact - Table 2.4-10 summarizes the radiation doses calculated for releases of radionuclides in gaseous and liquid effluents during normal operation of the Sequoyah Nuclear Plant. The predicted cumulative radiological impact on the Tennessee River from operation of the Watts Bar, Sequoyah, Bellefonte, and Browns Ferry Nuclear Plants is discussed in Appendix L. The external radiation dose from outside liquid storage tanks is also shown in Table 2.4-10 and is discussed in Appendix K.

A comparison of doses resulting from the operation of the Sequoyah Nuclear Plant to those occurring from natural

radioactivity assists in placing the doses from Sequoyah in perspective. Near the plant site the average annual dose from naturally occurring external sources of radiation is 125 mrem (Table 2.4-11). An individual receives an additional dose of approximately 20 mrem per year from naturally occurring internal sources. Therefore, the average total dose from natural radioactivity in the vicinity of the Sequoyah plant is approximately 145 mrem per year. Individual doses vary widely around this average value because of local differences in the concentrations of terrestrial radioactivity and because of variations in dose rates within different types of buildings. Large variations are also observed between different areas within the United States because of the dependence of cosmic ray dose rates on altitude and geomagnetic latitude. Due to these variations, the annual total-body doses to individuals in the United States from natural radioactivity range from approximately 110 mrem to 240 mrem.

A hypothetical individual at the site boundary would receive a maximum annual dose of about 6 mrem from the normal operation of the Sequoyah Nuclear Plant. It is assumed that this individual stands in the open at the highest dose point on the site boundary for 24 hours a day, 365 days per year. The maximum dose to the hypothetical individual is about 4 percent of the dose from natural background radiation. The maximum dose to an actual individual should be significantly less than the dose to the hypothetical individual.

The population dose within 50 miles of the Sequoyah site from naturally occurring radioactivity is estimated

to be approximately 160,000 man-rems in the year 2010 (Table 2.4-11). The population dose in the year 2010 due to normal operation of the Sequoyah Nuclear Plant is calculated to be 53 man-rems (Table 2.4-10), which is less than 0.04 percent of the dose to the population within 50 miles from natural background radiation. Because population groups beyond 50 miles were considered in dose estimates for radionuclides in liquid effluents, the population dose due to operation of the Sequoyah Nuclear Plant is actually less than 0.04 percent of the dose to the same population due to natural background radiation.

TVA has evaluated the potential radiation dose from a broad spectrum of possible pathways of exposure. It should be emphasized that it is possible to theoretically calculate an environmental radioactivity level or potential radiation dose that is minutely small. The dose calculated in this evaluation is only a small fraction of the dose from the natural background radiation and is, in fact, much less than the variations in natural background radiation doses. It is concluded that the Sequoyah Nuclear Plant will operate with no significant risk to the health and safety of the public.

REFERENCES FOR SECTION 2.4

1. Atomic Energy Commission, Final Environmental Statement Related to the Operation of Oconee Units 1, 2, and 3 Duke Power Company, March 1972.

Table 2.4-1

ESTIMATED ANNUAL LIQUID DISCHARGE TO WASTE DISPOSAL
TWO UNITS

Source	Total Annual Discharge, gal
Laundry, shower, handwashes	240,000
Laboratory	32,000
Equipment drains, leaks	160,000
Decontamination	16,000
Resin regeneration Evaporator condensate	190,000
Total waste disposal system	638,000
Chemical and Volume Control System (tritium control)	720,000
Total plant	1,358,000

Table 2.4-2

ANNUAL LIQUID AND GASEOUS RELEASE BY ISOTOPE

(Two Units - 0.25 Percent Failed Fuel)

Isotope	Liquid Release (curies)	Gaseous Release (curies)
Br-84	0.329-4[a]	0.786-5
Kr-85	0.0	0.312+4
Kr-85m	0.0	0.425+2
Kr-87	0.0	0.200+2
Kr-88	0.0	0.608+2
Rb-88	0.149-2	0.839-4
Rb-89	0.328-4	0.509-6
Sr-89	0.135-2	0.410-6
Sr-90	0.531-4	0.146-7
Sr-91	0.393-4	0.208-7
Y-90	0.397-4	0.191-7
Y-91	0.226-2	0.683-6
Y-92	0.583-5	0.424-8
Zr-95	0.308-3	0.889-7
Nb-95	0.333-3	0.892-7
Mo-99	0.530+0	0.216-3
Te-132	0.307-1	0.127-4
Te-134	0.324-4	0.636-7
I-129	0.0	0.0
I-131	0.510+0	0.647-2
I-132	0.539-1	0.247-2
I-133	0.158+0	0.293-2
I-134	0.603-2	0.955-3
I-135	0.280-1	0.755-3
Xe-131m	0.0	0.111+3
Xe-133m	0.0	0.613+2
Xe-133	0.0	0.6025+4
Xe-135	0.0	0.157+3
Xe-135m	0.0	0.143+3
Xe-138	0.0	0.669+1
Cs-134	0.994-1	0.279-4
Cs-136	0.363-1	0.115-4
Cs-137	0.502+0	0.140-3
Cs-138	0.670-3	0.577-5
Ba-140	0.108-2	0.363-6
La-140	0.618-3	0.314-6
Ce-144	0.720-4	0.355-7
Pr-144	0.672-4	0.357-7
Cr-51	0.114-2	0.337-6
Mn-54	0.116-2	0.316-6
Mn-56	0.944-3	0.491-6
Fe-59	0.136-2	0.392-6
Co-58	0.348-1	0.972-5
Co-60	0.122-2	0.309-6
H-3	0.350+3	0.300+3

Note: Above gaseous releases include 60-day holdup radwaste system as follows:

a. $.329 \times 10^{-4}$

Table 2.4-3

EFFECT OF ALTERNATIVE TREATMENT SYSTEMS

ON ANNUAL RADIOACTIVE GASEOUS RELEASES

	Kr-85	Xe-131m	Xe-133	I-131
60-day holdup	3000. Ci	52. Ci	374. Ci	$1. \times 10^{-5}$ Ci
Alternate Systems	**Kr-85**	**Xe-131m**	**Xe-133**	**I-131**
45-day holdup	3000. Ci	130. Ci	2700. Ci	$4. \times 10^{-5}$ Ci
Recombiner	3000. Ci	$\simeq 0$	$\simeq 0$	$\simeq 0$
Removal System	0	0	0	0

Table 2.4-4

SPECIFICATIONS FOR WASTE TREATMENT SYSTEMS COMPONENTS

Evaporators	
Design capacity, gpm	
Waste evaporator	2
Auxiliary waste evaporator	15
Type	Pressure
Design ratio, activity in bottoms to activity in distillate	10^3
Steam supply, psig	50
Material	Austenitic SS
Filters	
Type	Disposable synthetic cartridge
Design pressure, psig	200
Design temperature, °F	250
Flow rate, gpm	20 (waste condensate) 35 (others)
Pressure drop at 20 gpm, clean filter, psi	5
Maximum differential pressure 100 percent fouled, psi	20
Retention for 25-micron particles, percent	98
Material of construction	SS (housing) Nylon (element)
Waste Condensate Evaporator Demineralizer	
Type	Flushable, mixed bed
Vessel design pressure, internal, psig	200
Vessel design pressure, external, psig	15
Vessel design temp, °F	250
Resin volume, each, ft^3	30.0
Vessel volume, each, ft^3	43.0
Bed depth, ft	5.5
Bed diameter, in.	31.5
Design flow rate, gpm	120

Table 2.4-4 (Continued)

Waste Condensate Evaporator Demineralizer (continued)

Resin bed and vessel pressure drop for 120 gpm flow (fouled condition), psi	15.5
Minimum decontamination factor for ions removed	10
Upper and lower retention screen U.S., mesh	(105 micron)
Normal operating temperature, °F	127
Normal operating pressure, psig	150
Resin type	Rohm & Haas Amberlite IRN-217 or equivalent
Material of construction	Austenitic SS

In estimating releases, the following process decontamination factors are assumed for nongaseous radioisotopes:

Evaporators	- 100[3]
Demineralizers	- 100
Filters	- 1

Table 2.4-5

RADIOACTIVITY CONCENTRATIONS IN THE STEAM GENERATORS*
(Secondary System)

Isotope	Concentrations, μCi/gram
Mn-54	0.26×10^{-6}
Mn-56	0.13×10^{-5}
Co-58	0.85×10^{-5}
Co-60	0.26×10^{-6}
Fe-59	0.35×10^{-6}
Cr-51	0.31×10^{-6}
Br-84	0.12×10^{-6}
Kr-85^{m}	0.17×10^{-7}
Kr-85	0.37×10^{-7}
Kr-87	0.98×10^{-8}
Kr-88	0.29×10^{-7}
Rb-88	0.57×10^{-5}
Rb-89	0.13×10^{-6}
Sr-89	0.32×10^{-6}
Sr-90	0.96×10^{-8}
Sr-91	0.60×10^{-7}
Y-90	0.11×10^{-7}
Y-91^{m}	0.17×10^{-7}
Y-91	0.47×10^{-6}
Mo-99	0.37×10^{-3}
Tc-99^{m}	0.24×10^{-3}
Tc-99	0.26×10^{-11}
Te-132	0.19×10^{-4}
Te-134	0.98×10^{-7}
I-131	0.20×10^{-3}
I-132	0.26×10^{-4}
I-133	0.19×10^{-3}
I-134	0.25×10^{-5}
I-135	0.53×10^{-4}
Xe-133^{m}	0.25×10^{-7}
Xe-133	0.22×10^{-5}
Xe-135^{m}	0.94×10^{-7}
Xe-135	0.56×10^{-7}
Xe-138	0.54×10^{-8}
Cs-134	0.18×10^{-4}
Cs-136	0.12×10^{-4}
Cs-137	0.90×10^{-4}
Cs-138	0.25×10^{-5}
Ba-137^{m}	0.84×10^{-4}
Ba-140	0.35×10^{-6}
La-140	0.19×10^{-6}
Ce-144	0.24×10^{-7}
Pr-144	0.24×10^{-7}
Tritium	0.29×10^{-3}

Based on 0.25 percent failed fuel, 110 lbs/hr primary-to-secondary leak rate, 30 gal/min per unit blowdown rate, tritium concentration of 2.5 μCi/ml in primary system.

Table 2.4-6

AIR AND TERRESTRIAL MONITORING

SAMPLING AND ANALYSIS SCHEDULE

Type Sample	Frequency	Mode	Analysis: Gross Beta	Gamma Scan[a]	$Sr^{89,90}$	Total Alpha[b]	^{3}H
Air filter	Weekly	C[c]	x	x			
	Biweekly						x[i]
	Monthly	Cp[d]		x			
Charcoal filter	Weekly	C[b]		x			
Rainwater	Monthly	Cp[c]	x	x	x		x
Heavy particle fallout	Monthly	Cp[d]	x				
Soil	Quarterly	Note[e]	x	x			
Vegetation	Quarterly	Note[f]	x	x	x	x	
Pasturage grass	Monthly	Note[f]	x	x	x		
Milk	Monthly[h]	G[g]		x	x		
River water	Monthly[j]	G[g]	x	x	x	x	x
Well water	Monthly	G[g]	x	x			
Public water	Monthly	G[g]	x	x			x
Food crops	Twice each year	Note[f]	x	x	x		

a. The gamma scan includes specific analyses for at least 10 isotopes, except for milk samples which are analyzed for four isotopes and charcoal filters which are analyzed for I-131.

b. Heavy metals separated as a part of the ^{89}Sr and ^{90}Sr separation process are precipitated, filtered, and counted for alpha.

c. C - continuous collection

d. Cp - composite sample for period indicated

e. Soil is collected over a 2-square-foot area 1 inch in depth.

f. Vegetation (grass, weeks, leaves, etc.) and food crops are collected such that there is sufficient quantities of the samples for appropriate analysis after necessary preparation.

g. G - grab sample at time of collection

h. During the seasons that animals producing milk for human consumption are on pasture, samples of fresh milk will be obtained weekly and analyzed for I-131 content.

i. Sampling will be initiated at least one year before plant startup.

j. Collected at point of plant discharge in Tennessee River and at a point on the Hiwassee River.

Table 2.4-7

BIOLOGICAL SAMPLING SCHEDULE (RADIOLOGICAL) -

SEQUOYAH NUCLEAR PLANT, CHICKAMAUGA AND NICKAJACK RESERVOIRS

Station or TRM	Horizontal Location[a]	Asiatic Clams	Plankton[c]	Sediment	Fish[d]
496.50	R-LM	1[b]	1	1	
490.47	R-LM			1	
484.10	R-LM			1	
483.55				1	
483.40	R-LM	1	1	1	
480.82	R-LM	1	1	1	
472.80	R-LM			1	
465.40	R-LM	1	1	1	
435.42	R-LM			1	
425.48	R-LM	1	1	1	

a. Horizontal location looking downstream: R-LM = area from right shore to to left middle of stream.

b. Numbers designate number of samples.

c. Samples include both phytoplankton and zooplankton.

d. Samples of fish will be collected from Watts Bar, Chickamauga, and Nickajack Reservoirs.

Table 2.4-8

RESERVOIR WATER SAMPLES COLLECTED TO MONITOR PREOPERATIONAL AND OPERATIONAL CONDITIONS IN CHICKAMAUGA AND NICKAJACK RESERVOIRS IN RELATION TO THE SEQUOYAH NUCLEAR PLANT

TRM Station	Distance From Left Bank (Normal Full Pool Elev.) (Feet)	(Percent)	Depths for Water (meters)
496.5	2,500	57	1, 8
484.1	1,064	40	1
	1,730	66	1, 12
483.55	598	23	8
483.4[a]	266	11	1
	435	17	1, 12
472.8	4,442	89	1, 9
465.4	994	75	1
435.4	1,140	29	1, 15
425.5	2,733	54	1, 12
	4,000	79	1

a. This station will be located 500 feet downstream from the point of release.

Table 2.4-9

RESERVOIR MONITORING RADIOLOGICAL ANALYSES

Type Sample	Analyses[a]
Fish	Gamma scan, gross alpha,[b] gross beta, ^{89}Sr and ^{90}Sr[c]
Sediment	Gamma scan, gross alpha, gross beta, ^{89}Sr and ^{90}Sr
Water	Gamma scan, gross alpha, gross beta, ^{89}Sr, ^{90}Sr, and tritium
Plankton	Gamma scan, gross alpha, gross beta, ^{89}Sr and ^{90}Sr[d]
Benthos	Gamma scan, gross alpha, gross beta, ^{89}Sr and ^{90}Sr will be determined on shells only

All samples will be collected and analyzed on a quarterly frequency.

a. The activity of at least 10 gamma emitting radionuclides will be determined with a multichannel gamma spectrometer. ^{89}Sr and ^{90}Sr will be determined by appropriate radiochemical techniques.

b. Aliquot of prepared sample counted directly for alpha.

c. ^{89}Sr and ^{90}Sr concentrations will be determined on the whole fish and flesh of smallmouth buffalo only, which will be composed of individuals as nearly equal in size as possible. The composite samples will contain an equal quantity (approximately) of flesh from each of the several fish of the species. From each composite a subsample of at least 50 to 100 grams (net weight) will be drawn for counting.

d. ^{89}Sr and ^{90}Sr will be determined if there is adequate sample. At least 50 grams must be obtained for analytical accuracy. Samples will be collected twice annually during periods of greatest abundance.

Table 2.4-10

SUMMARY OF RADIOLOGICAL IMPACT ON ANNUAL BASIS[a,b]

	Normal Operation
A. Liquid Effluents	
Activity released	2.0 Ci
Average concentration before dilution in the Tennessee River	9.0 (-10)[c] μCi/cm^3[d]
	3.1 (-8) μCi/cm^3[e]
Average	2.1 (-9) uCi/cm^3
Maximum human organ doses	
1. bone	3.7 (-2) mrem
2. G.I. tract	2.7 (-2) mrem
3. thyroid	1.2 (-1) mrem
4. skin	2.2 (-2) mrem
5. total body	2.2 (-2) mrem
Human population doses within the Tennessee Valley Region	
1. bone	11 man-rem
2. G.I. tract	7.4 man-rem
3. thyroid	30 man-rem
4. skin	6.5 man-rem
5. total body	6.5 man-rem
Maximum dose to terrestrial vertebrates	270 mrad
Maximum doses to aquatic organisms	
1. plants	15 mrad
2. invertebrates	6.6 mrad suspended
	200 mrad benthic
3. fish	0.7 mrad

a. Table excludes tritium. Doses due to releases of tritium in liquid effluents are 4.9×10^{-3} mrem and 1.7 man-rem. Doses due to releases of tritium in gaseous effluents are 0.3 mrem and 1.5 man-rem.
b. Releases for two units operating at full power with 0.25 percent failed fuel.
c. 9.0×10^{-10}
d. Assuming cooling towers in once-through or helper mode (1.1×10^6 GPM). Operational approximately 96 percent of year in this mode.
e. Assuming cooling towers in closed mode (32,000 GPM). Operational approximately 4 percent of year in this mode.

Table 2.4-10 (Continued)

	Normal Operation
B. Gaseous Effluents	
Maximum individual doses	
1. inhalation at site boundary (thyroid)	1.0 (-1) mrem
2. consumption of milk[g] from nearest dairy farm (thyroid)	7.5 (-1) mrem
3. external exposure at site boundary	
Gamma	1.8 mrem
Beta	3.7 mrem
Population doses within a 50-mile radius	
1. inhalation (thyroid)	2.1 (-1) man-rem
2. consumption of milk (thyroid)	2.3 man-rem
3. external exposure	
Gamma	5.1 man-rem
Beta	1.5 (+1) man-rem
C. Direct Gamma Radiation from Liquid Storage Tanks	3.6 (-2) mrem
D. Maximum Annual Dose to[h] Any Individual	5.6 mrem
E. Maximum Population Dose[i]	3.8 (+1) man-rem

g. See Appendix I1 for iodine ingestion dose calculated by methods specified in Regulatory Guide 1.42.

h. Skin

i. Thyroid. Population skin dose is 2.7 (+1) man-rems.

Table 2.4-11

DOSES FROM NATURALLY OCCURRING BACKGROUND RADIATION

Individual Doses (mrem)

External[a]	125
Internal[b]	20
Total	145 mrem

Population Dose (man-rem)

0.145 rem x 1,100,000[c] people = 160,000 man-rem

a. Measured by TVA personnel
b. Principles of Radiation Protection, K. Z. Morgan and J. E. Turner, eds. New York: John Wiley and Sons, Inc., 1967, p. 10.
c. Estimated population within a 50-mile radius of the Sequoyah Nuclear Plant in the year 2010.

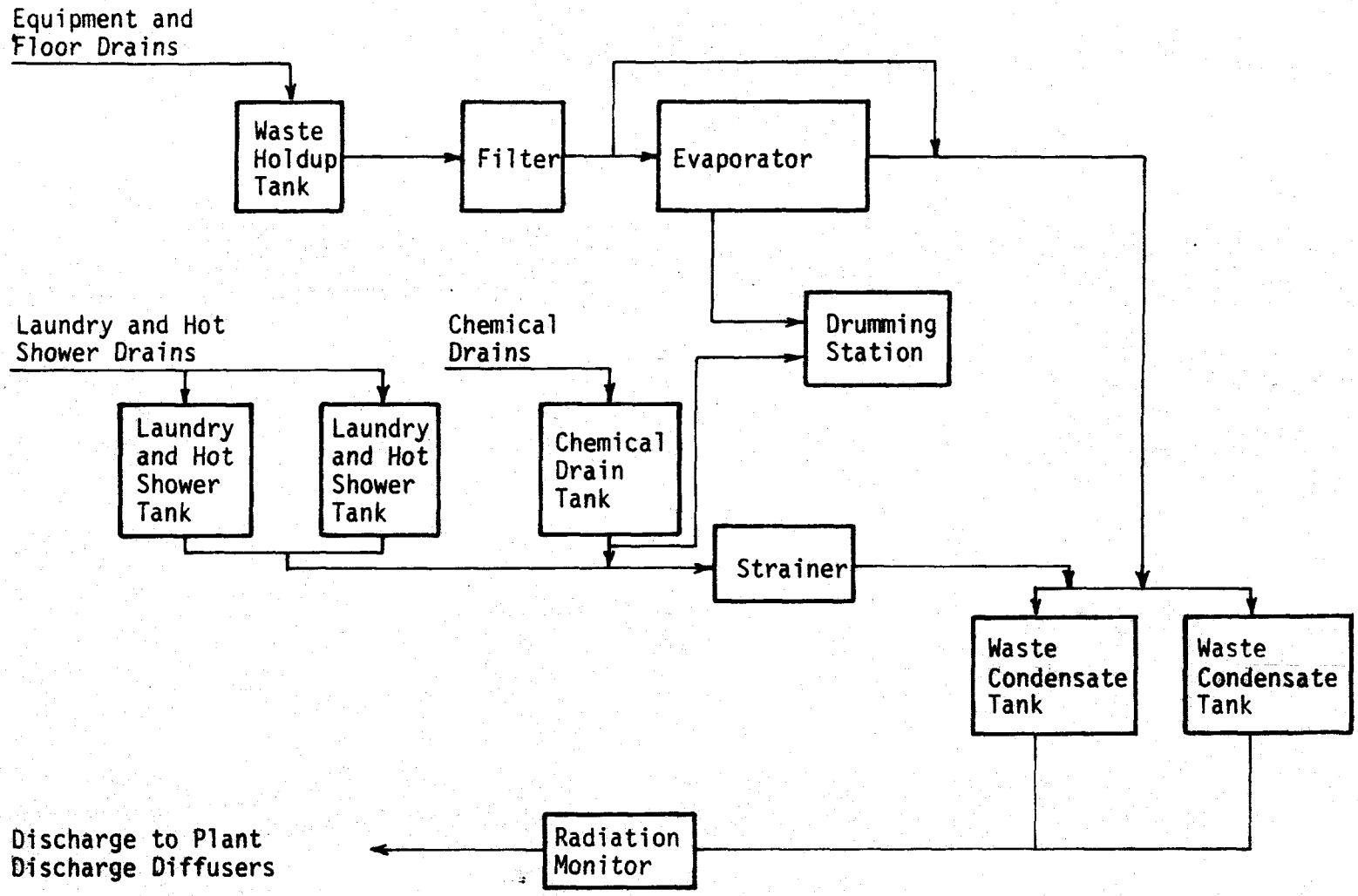

Figure 2.4-1
LIQUID RADWASTE
ORIGINAL SYSTEM

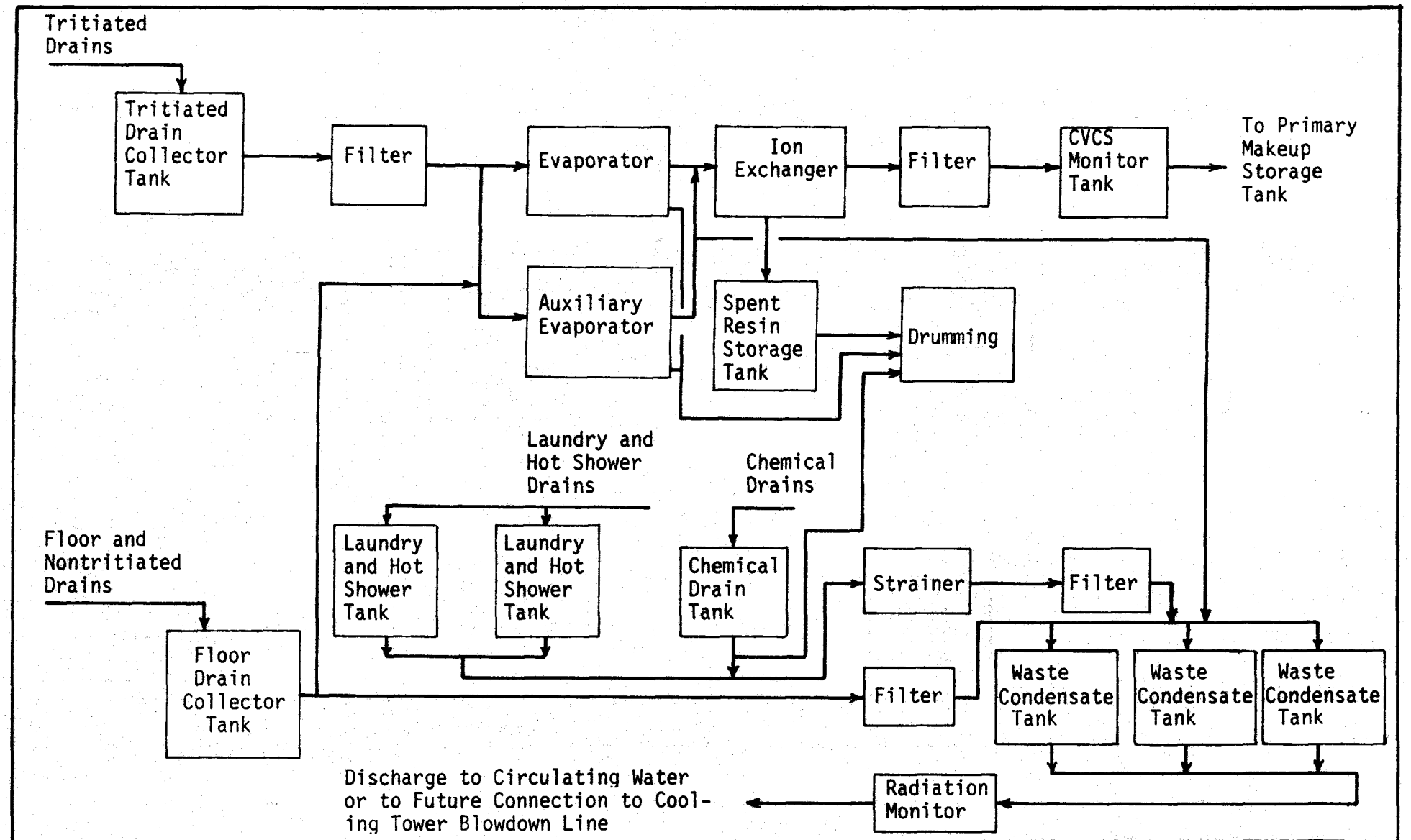

Figure 2.4-2
LIQUID RADWASTE, TRITIUM RECYCLE
SEQUOYAH NUCLEAR PLANT

Figure 2.4-3
GASEOUS RADWASTE
ORIGINAL 45-DAY HOLDUP (SIX STORAGE TANKS)
ALTERNATE 1, 60-DAY HOLDUP (NINE STORAGE TANKS)

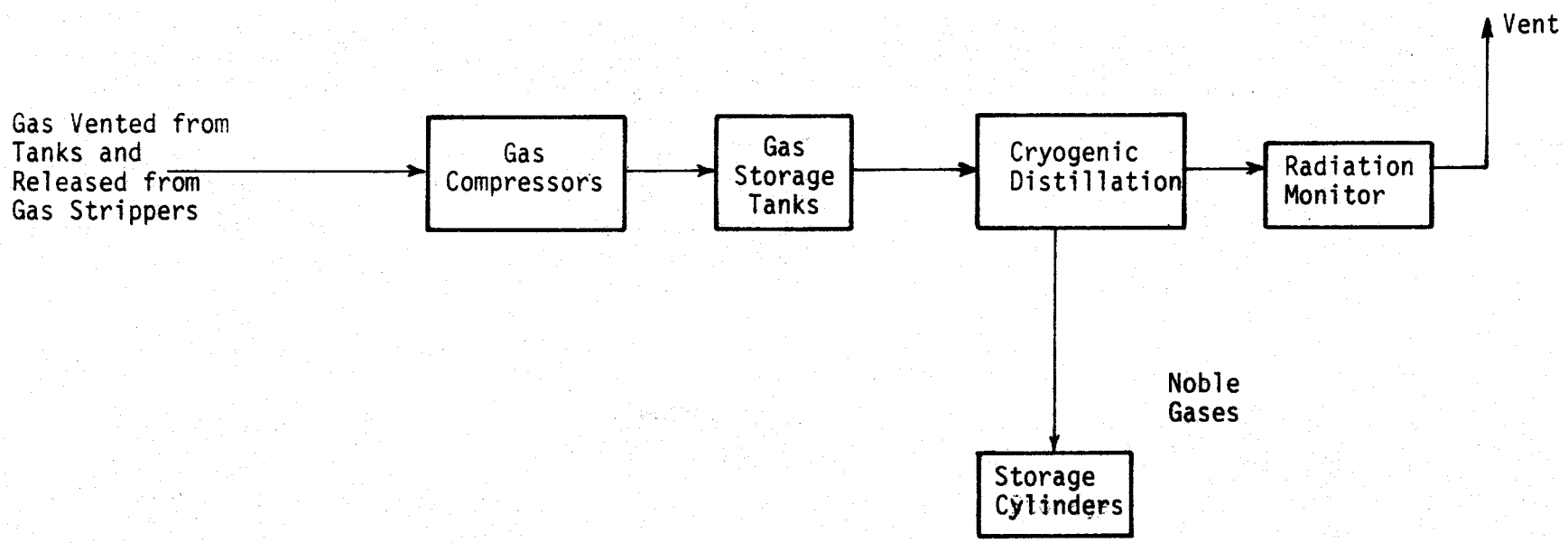

Figure 2.4-4
GASEOUS RADWASTE
ALTERNATIVE 2
ADDITION OF
CRYOGENIC DISTILLATION

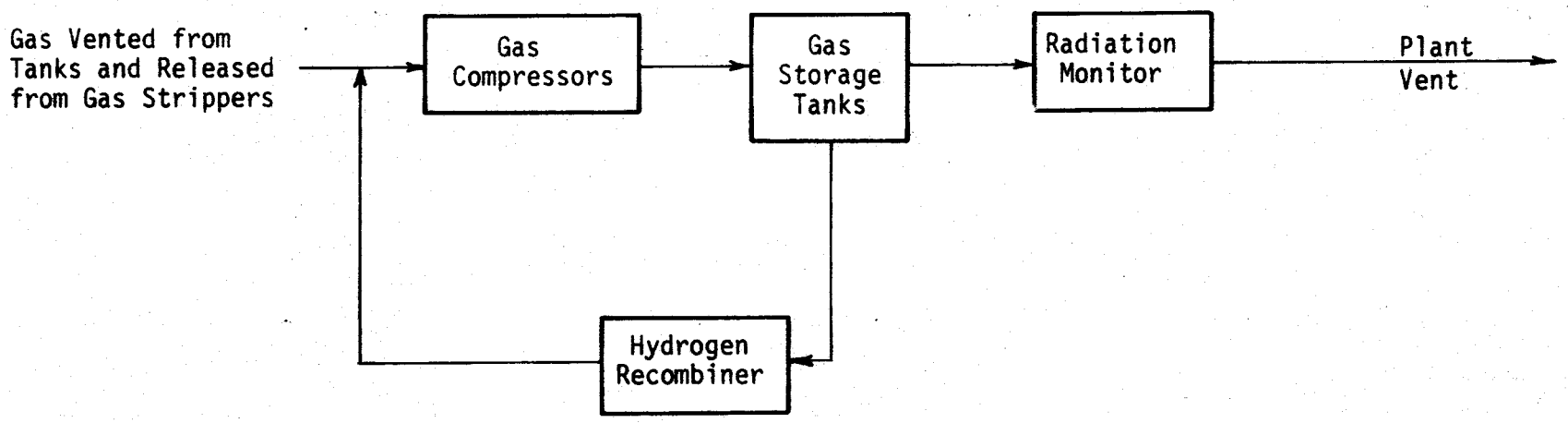

Figure 2.4-5
GASEOUS RADWASTE
ALTERNATIVE 3
ADDITION OF A
HYDROGEN RECOMBINER

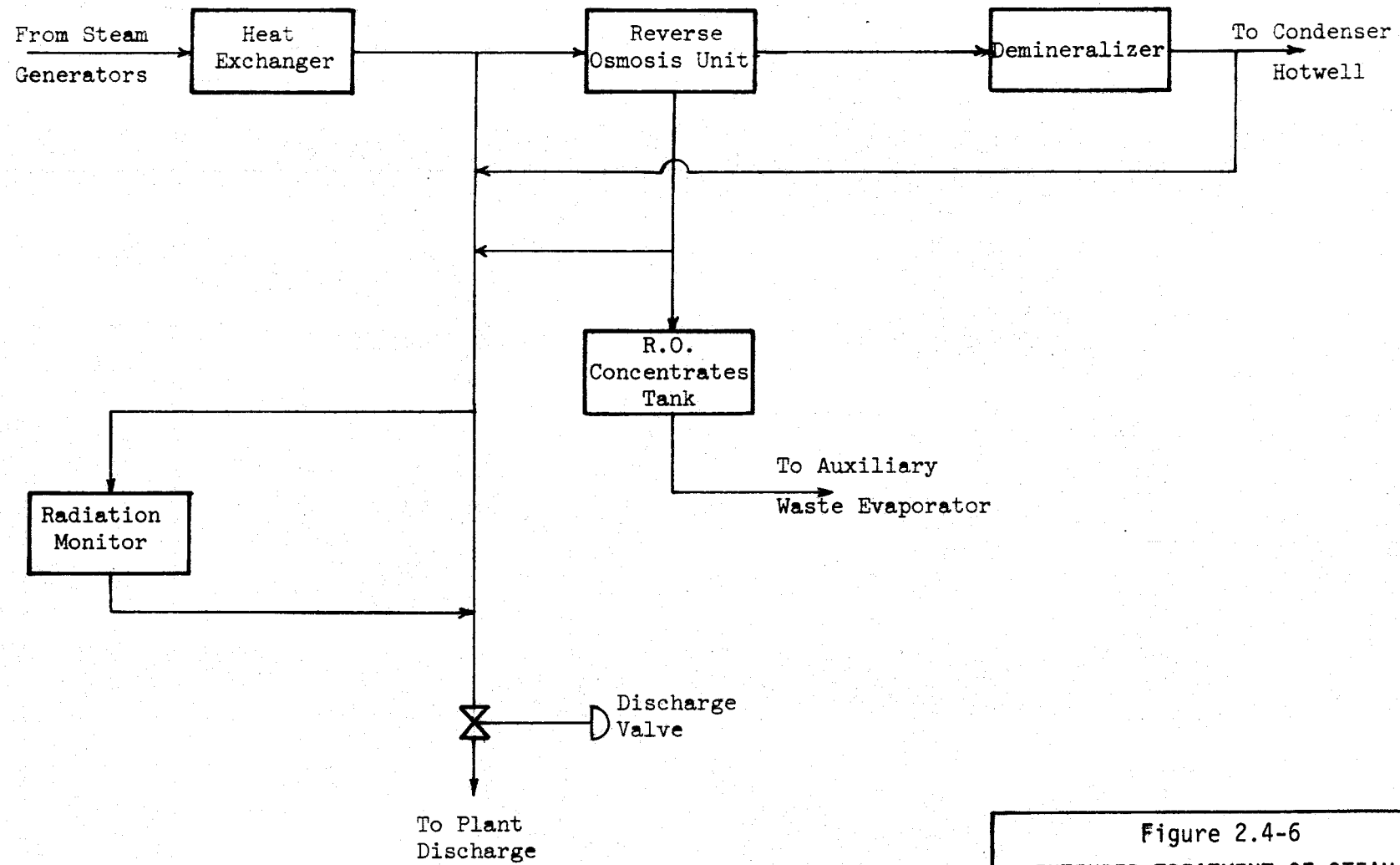

Figure 2.4-6

EXTENDED TREATMENT OF STEAM GENERATOR BLOWDOWN

SEQUOYAH NUCLEAR PLANT

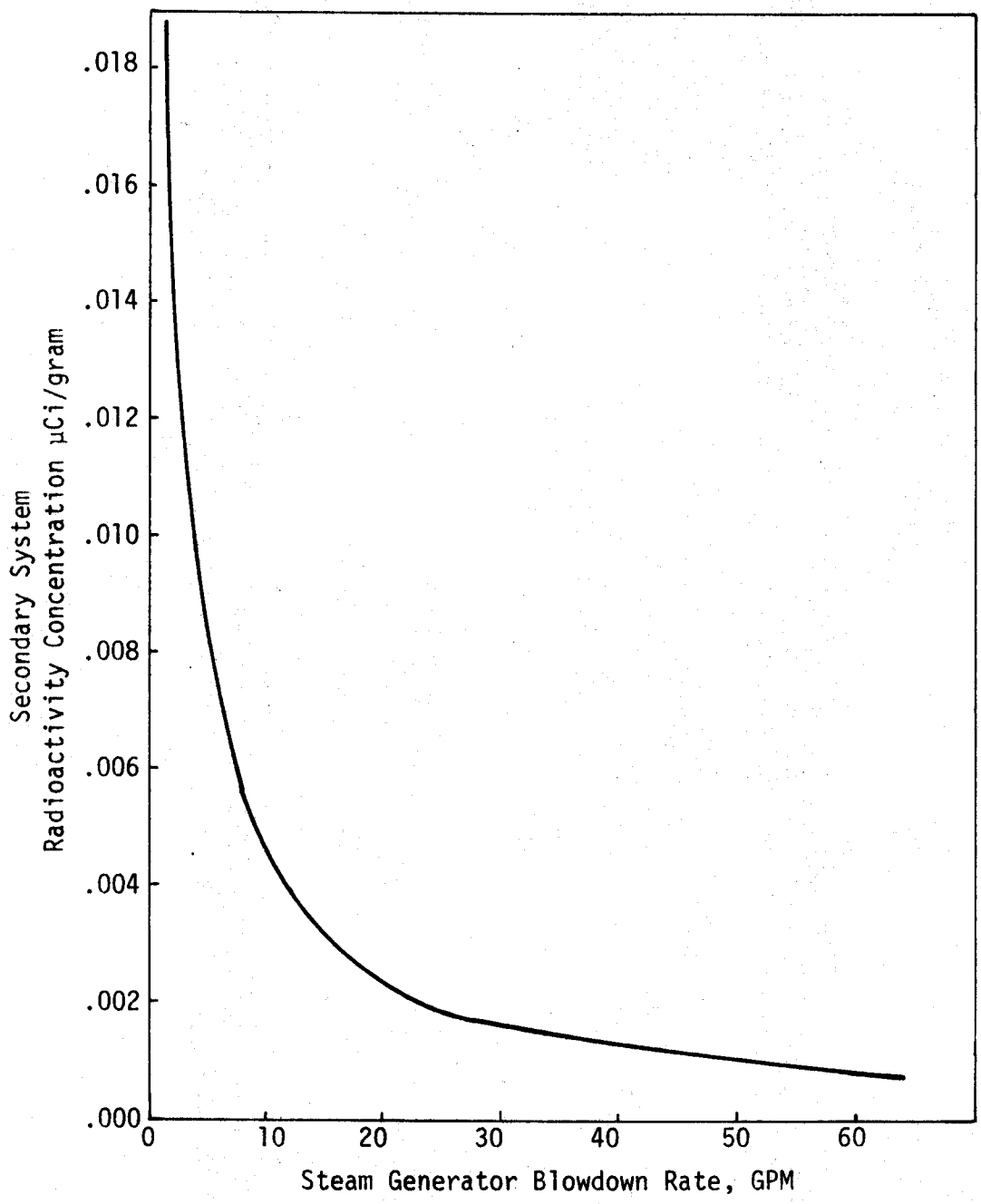

Basis: 0.25 percent failed fuel,
110 lbs/hr. primary-to-
secondary leak rate

Figure 2.4-7
RADIOACTIVITY CONCENTRATIONS AS A FUNCTION OF STEAM GENERATOR BLOWDOWN RATE
SEQUOYAH NUCLEAR PLANT

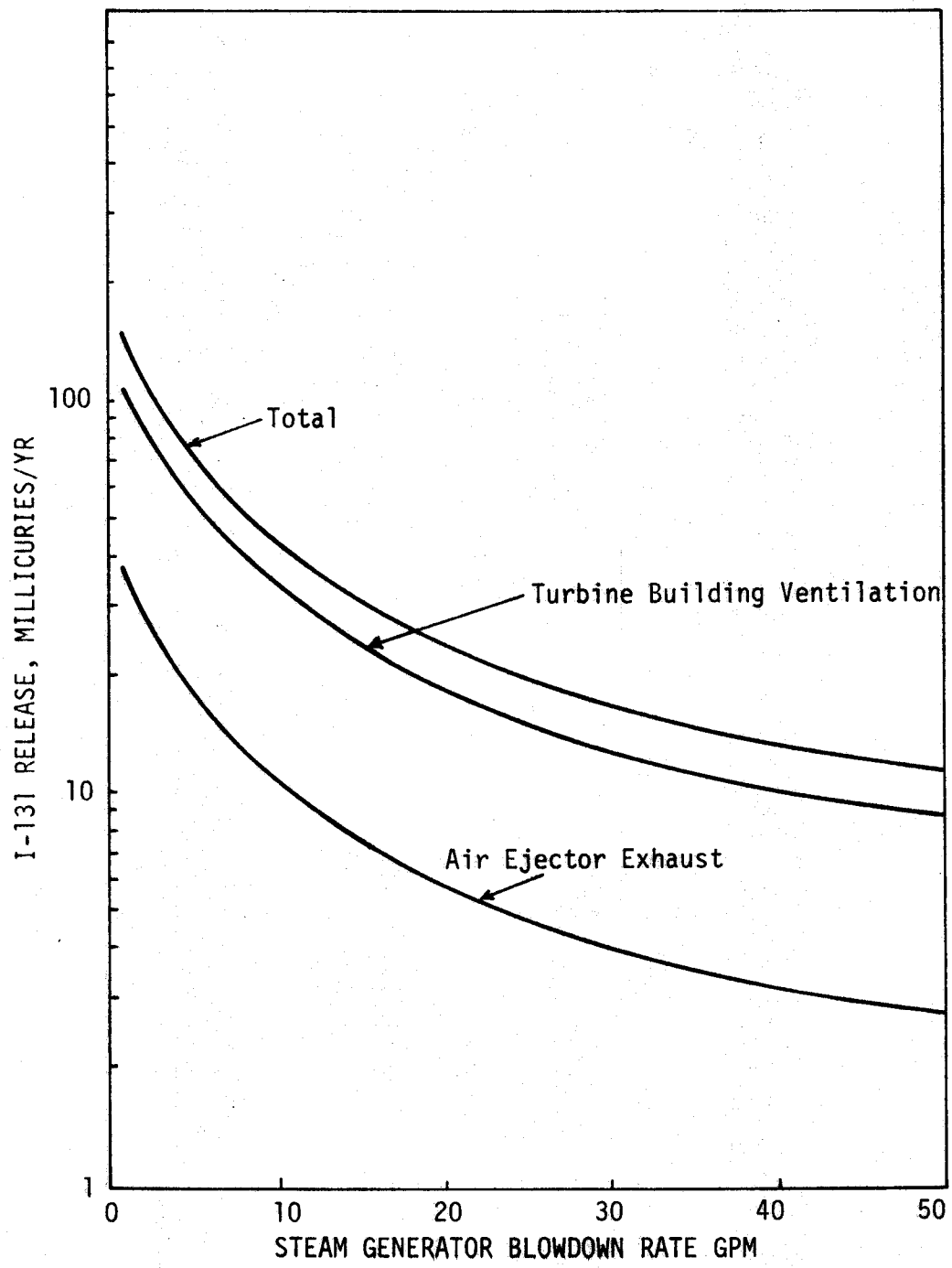

Basis: 0.25 percent failed fuel, 110 lbs/hr. primary-to-secondary leak rate

Figure 2.4-8

EFFECT OF STEAM GENERATOR BLOWDOWN RATE ON I-131 RELEASE

SEQUOYAH NUCLEAR PLANT

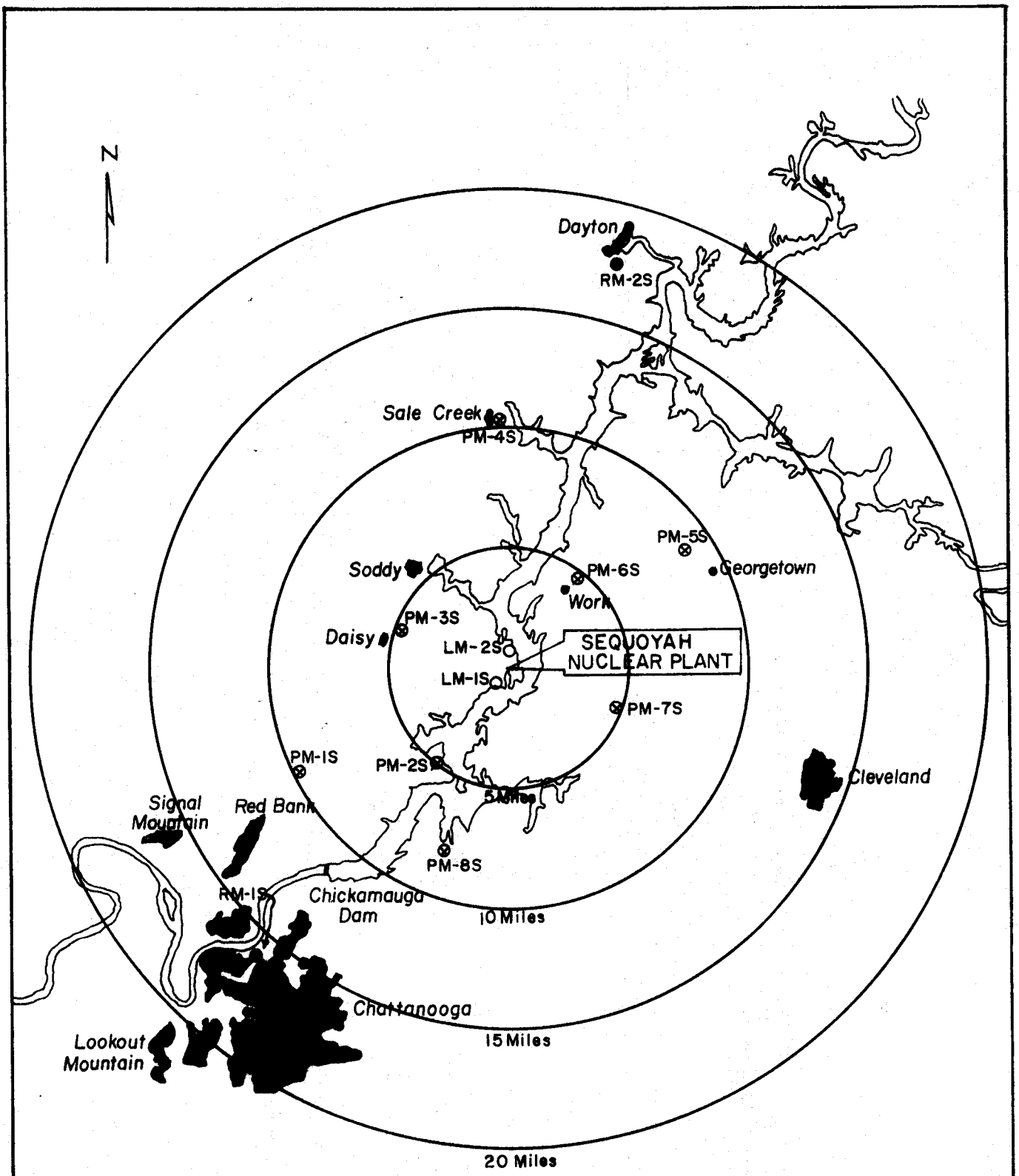

o Local Monitor

⊗ Perimeter Monitor

● Remote Monitor

Atmospheric and Terrestrial Samples Collected at Each Station

Figure 2.4-9

ATMOSPHERIC AND TERRESTRIAL MONITORING NETWORK

SEQUOYAH NUCLEAR PLANT

SAMPLE	LOCATION
WATER	496.5, 484.1, 483.54, 483.4, 472.8, 465.4, 435.4, 425.5
SEDIMENT	496.5, 490.5, 484.1, 483.55, 483.4, 480.8, 472.8, 465.4, 435.4, 425.5
PLANKTON	496.5, 483.4, 480.8, 465.4, 425.5
CLAMS	496.5, 483.4, 480.8, 465.4, 425.5

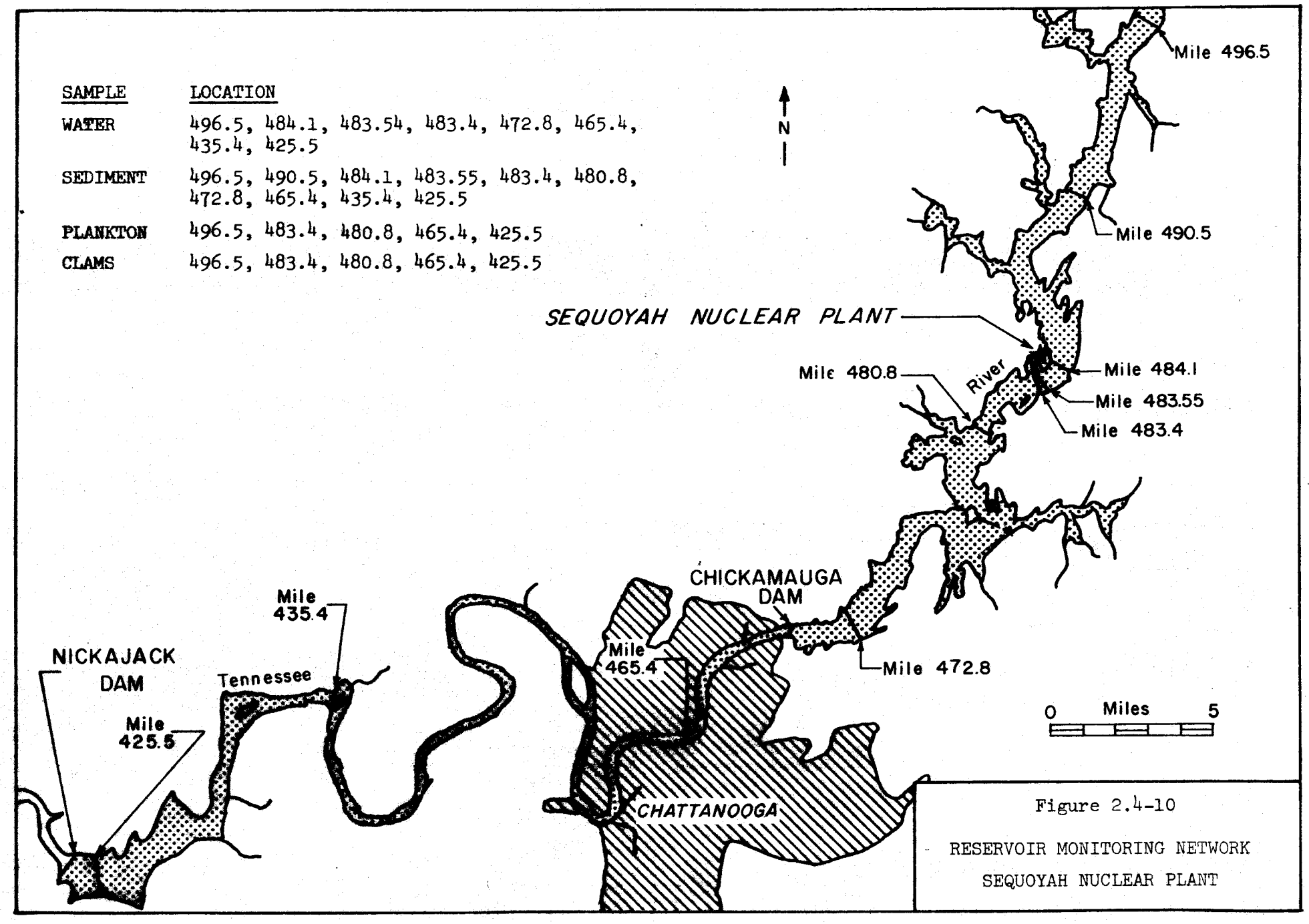

Figure 2.4-10

RESERVOIR MONITORING NETWORK

SEQUOYAH NUCLEAR PLANT

FIGURE 2.4-11 EXPOSURE PATHWAYS

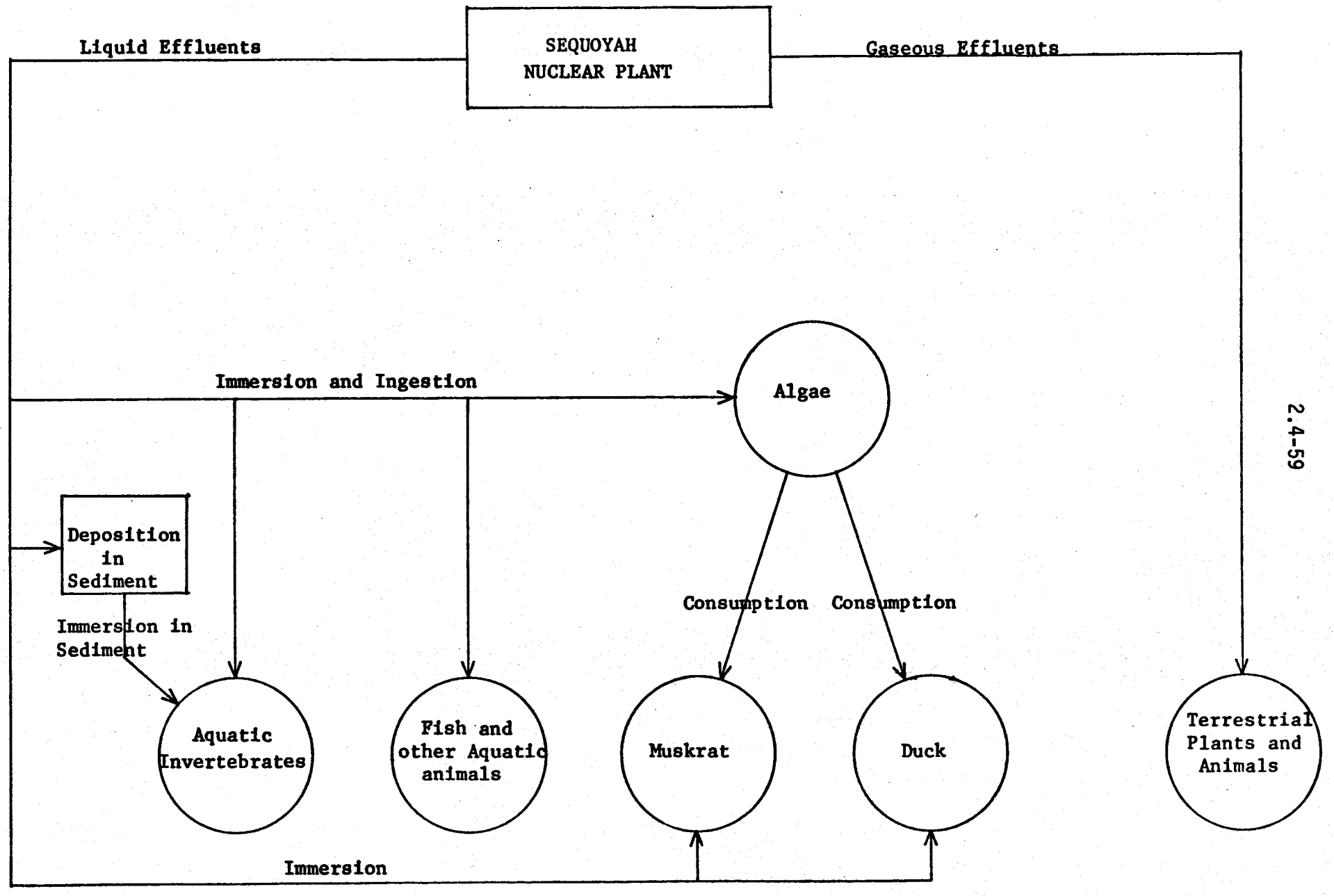

EXPOSURE PATHWAYS TO ORGANISMS OTHER THAN MAN

FIGURE 2.4-11 EXPOSURE PATHWAYS (Continued)

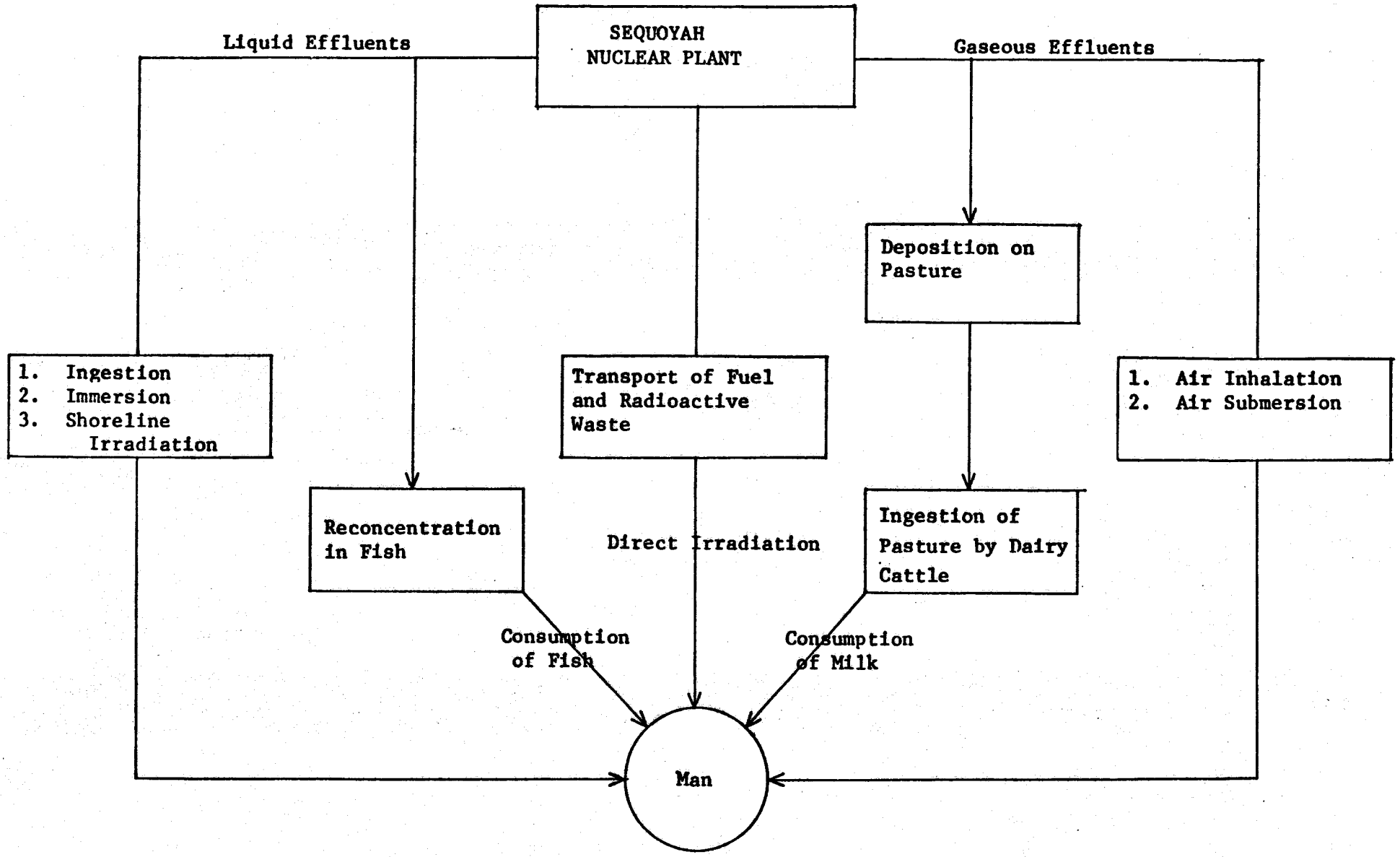

EXPOSURE PATHWAYS TO MAN

2.5 Nonradioactive Discharges - A description of the potential sources and amounts of nonradioactive discharges which have been identified is given in this section, along with a description of the specified treatment of these potential sources.

1. Chemical discharges - The sources of chemicals and the maximum expected quantity of chemical end products that could be discharged are summarized in Table 2.5-1. The plant water treatment systems and flow patterns are shown schematically in figure 2.5-1. The average and the maximum expected total chemical concentrations in the discharge pipe and in the reservoir after mixing are shown in Table 2.5-2. The tables were generated using conservative assumptions (high) for chemical usage in the plant. The ratios used for mixing of chemical discharges in the river are five volumes reservoir water to one volume discharge in the open mode, one volume reservoir water to one volume discharge in the helper mode, and nine volumes reservoir water to one volume discharge in the closed mode. These computations show that even under adverse conditions and using conservative assumptions, impacts to the environment due to chemical discharges from the Sequoyah Nuclear Plant will be very small.

(1) Main condenser cooling water system - The main condenser cooling water system has been designed for combined-cycle operation. As described in section 2.6, Heat Dissipation, the predominant mode of operation will be open (once-through cooling) with intermittent operation in the helper and closed modes. All modes will operate with a condenser flow rate of about 2,500 ft^3/s. The discharge from the condenser cooling water system will be routed to the reservoir through diffuser pipes to ensure rapid mixing with reservoir water.

Operation of the cooling towers in the helper mode will not cause an appreciable increase in the concentrations of dissolved solids and trace metals in the cooling water returned to the reservoir. Operation of the cooling towers in the closed mode will cause the concentrations of dissolved solids and trace metals in the cooling system to increase to about twice the concentrations occurring in the makeup water. A concentration factor of about 2 should preclude the need for chemical treatment of the condenser cooling system and the associated discharge of these chemicals.

The maximum trace metal concentrations expected in the plant discharge and in Chickamauga Reservoir, after mixing, for each mode of cooling system operation are shown in Table 2.5-3. Also shown are the applicable effluent and stream guidelines currently recognized by the Tennessee Water Quality Control Board. During open- and helper-mode operation of the cooling system, the concentrations in the discharge are the same as the natural trace metal concentrations which occur in the makeup water (disregarding evaporative losses in helper mode). During closed-mode cooling the trace metal concentrations in the cooling system and the blowdown will be about twice those occurring in the makeup water. However, when the blowdown is discharged and mixed in the reservoir, the resulting trace metal concentrations will approach those occurring naturally in the reservoir. There are no planned uses of trace metal compounds at the Sequoyah plant that would result in the <u>normal</u> discharge of "added" trace metals to the aquatic environment.

Based on the data presented in Table 2.5-3, at no time would the maximum trace metal concentrations in the normal

discharges from the Sequoyah Nuclear Plant exceed the Tennessee effluent guidelines. However, upon discharge and subsequent mixing with the reservoir water the Tennessee stream guidelines would be exceeded for total iron, manganese, copper (closed mode only), zinc, aluminum, and possibly silver. Since the minimum detectable concentrations of the laboratory analytical procedures used for the silver analysis exceeded the stream guidelines, the reported concentration cannot be reliably compared with the guidelines. As shown in Table 2.5-3, each parameter for which the expected maximum concentration exceeds the stream guideline corresponds with a natural trace metal concentration occurring in the plant makeup water (Chickamauga Reservoir) which also exceeds the stream guideline.

Although the stream guidelines might be exceeded for some parameters these concentrations would not be expected to have a significant environmental impact.

Drift from the cooling towers is not expected to exceed .25 ft^3/s, and essentially all of it will fall in the immediate vicinity of the towers. This amount of drift will result in an average discharge of solids of about 125 lb/d when the towers are operating in the helper mode and about 245 lb/d when the towers are operating in the closed mode.

The water in Chickamauga Reservoir is of a scaling nature so the use of corrosion inhibitors will not be necessary and an automatic ball-type mechanical system will be used for cleaning the condenser tubes. Therefore, chemical treatment of the condenser circulating water should not be necessary.

(2) Raw cooling water and essential raw cooling water systems - Acrolein, an unsaturated aldehyde, will be fed to both the raw cooling water and essential raw cooling water systems for the control of Asiatic clams. It is expected that the use of acrolein will not be required more than 120 days per year. When required, it will be fed into the systems 1/2 hour each day to achieve a concentration within the cooling systems of approximately 0.2 to 0.3 mg/l during feed periods. The two cooling system flows will be added to the main condenser cooling system downstream of the condensers. The flow rate for the raw cooling water system will be about 28,800 gpm and the flow rate for the essential raw cooling water system will be about 72,000 gpm.

A sample of reservoir water collected in the vicinity of the Sequoyah water intake in May 1973 had a 1-hour acrolein demand of 0.08 mg/l at an acrolein dosage of 0.5 mg/l. However, taking no credit for acrolein demand and considering only dilution, the maximum concentration that would be expected in the main condenser system during or immediately following periods when acrolein was being simultaneously fed to both the raw and essential systems would range from 0.025 mg/l to about 0.048 mg/l depending upon the operating mode of the cooling system. Discharge through the diffusers of cooling water having these concentrations would result in an acrolein concentration in the river after mixing of 0.00416 mg/l when the plant is operating in the open mode, 0.0125 mg/l in the helper mode, and 0.0048 mg/l in the closed mode. The 96-hour TLm for fathead minnows is reported to be 0.06 mg/l.[1] The maximum concentration in the river (occurring for a 30-minute period) resulting from dilution alone (within the main condenser cooling system and by the diffusers) is about 7 percent of the 96-hour TLm during open-mode operation, about 21 percent during helper-mode operation, and about 8 percent during closed-mode operation.

Because of the acrolein demand of the main condenser cooling water, the detention time within the discharge pond (1 to 2 hours), short acroleination periods, tower stripping, and dilution, the use of acrolein should not have any significant adverse impact on the environment.

The essential raw cooling water systems will be equipped with emergency cooling towers which during periods of normal plant operation would not be used except for occasional testing and exercising of the equipment. The towers are for the purpose of cooling the essential system in the extremely unlikely event that the Chickamauga Dam should fail and the reservoir return to the original river channel. However, if the towers were used for extended periods of testing or emergency use, the blowdown rate to the discharge pond would be about 30 gal/min. At this blowdown rate, the concentration of dissolved solids within these cooling systems would not exceed two times the concentration of dissolved solids in the river. Considering the small quantity of discharge flow and that no chemicals (other than acrolein previously described) will be added to the system, it is concluded that water quality would not be adversely affected by the infrequent operation of these towers.

(3) Makeup water treatment plant - The makeup water treatment plant will have a maximum capacity of about 490 gal/min. Operation of the makeup water filter plant will require the addition of alum, soda ash, and chlorine. The annual amounts of these chemicals, if the filter plant is operated at full capacity 365 days per year, will be 63,950 lbs, 24,000 lbs, and 12,780 lbs, respectively. However, the actual operation should be much less than full capacity.

The system will consist of a conventional upflow clarifier utilizing two gravity sand filters for treating the water. Clarifier blowdown will be for 2 minutes per 8 hours of operation. Filter backwash water and clarifier sludge will contain aluminum hydroxide floc and settlable solids. The sludge will be processed through a concentrator with the treated effluent routed to the yard drainage pond or recycled to the water treatment plant. The dewatered sludge will be disposed of in accordance with guidelines established for the disposal of solid wastes.

The addition of a coagulation aid may be necessary for proper operation of the filter plant. The coagulation aid which will be used in the event that it is necessary or advantageous will be chosen from those approved by the Environmental Protection Agency[2] and will be used in accordance with the manufacturer's recommendations.

(4) Makeup water treatment plant demineralizers - The demineralizer system at Sequoyah will be of the combined modified mixed bed type. This system consists of two strong acid-cation units, one deaerator, and two modified mixed bed tanks. The modified mixed beds are comprised of weak base anion, strong base anion, and strong acid-cation resins.

The maximum capacity of the water treatment plant demineralizers will be about 360 gal/min. Normal procedure for treatment of spent demineralizer wastes is to blend the acid and caustic wastes in a holding tank, monitor, and adjust pH by addition of acid or caustic as required, and discharge the neutralized waste. At Sequoyah the spent regeneration wastes will be passed through a weak cation-anion exchanger which will minimize the amount of additional chemicals required to neutralize the waste. It will then be collected in a sump, and after pH

monitoring and any further pH adjustment required, it will be pumped to the condenser circulating water discharge conduit for mixing and discharge to the reservoir through the discharge pond.

It is anticipated that about 241,000 pounds of sulfuric acid and 192,000 pounds of sodium hydroxide will be expended annually if the demineralizers are operated at full capacity. After plant cleanup and startup, makeup water requirements will be less than the rated capacity of the makeup water filter plant and demineralizers. Under these conditions the chemical usage and resulting waste product chemical discharges will be reduced correspondingly. The contributions to increases in concentrations in the plant discharge during releases, based on operation at rated capacity 365 days per year, are included in Table 2.5-2. These increases in concentrations will cause no significant impact on the environment.

(5) Steam generator blowdown - Sodium phosphate, hydrazine, and ammonia will be used in treatment of the secondary system. The annual amounts of these chemicals are expected to be about 7,900 lbs, 4,100 lbs, and 1,100 lbs, respectively. Ammonia will be supplied as needed to maintain the desired pH in the steam generators, and sodium phosphate will be fed to maintain a residual PO_4^{---} concentration of 15 mg/l in the secondary system. In the steam generators, hydrazine decomposes to form ammonia which will be discharged as vapor through the condenser vacuum pumps.

The steam generator blowdown rate will normally be about 60 gal/min for two units. A reverse osmosis unit is provided to treat the steam generator blowdown in the event of significant primary-to-secondary system leakage. Since makeup to the secondary system

can be conveniently provided by the reverse osmosis system, the permeate stream from the reverse osmosis unit may be recycled to the condenser hotwell depending on the amount of secondary makeup required and the relative economics of producing makeup using a demineralizer system or the reverse osmosis system. The concentrated effluent will be monitored for radioactivity and, if necessary, will be treated in the radwaste system and disposed of as radwaste. If the level of radioactivity is low enough for discharge, the concentrated effluent will be routed to the condenser circulating water discharge stream for mixing and discharge to the reservoir. The estimated annual releases of ammonia, sodium, and phosphate from this source are shown in Table 2.5-1, and contribution to increases in the discharge are included in Table 2.5-2. The chemical additions to the secondary system of the steam generator will not significantly increase the chemical concentrations of the plant effluents. The resulting ammonia and sodium concentrations in both the effluent and river would be considerably less than the Tennessee guidelines. Although the phosphate concentration of the plant effluent would be well below the phosphate effluent guideline, the resulting phosphate concentration in the river after mixing would be considerably above the "numerical value" of Tennessee's phosphate guideline in streams. However, the Tennessee phosphate guidelines for streams provide for either a numerical limit or natural background phosphate levels, whichever is greater. In the vicinity of the Sequoyah Nuclear Plant the observed background phosphate concentrations in the river ranged from two to sixteen times that of the stream guideline numerical value of 0.03 mg/l as PO_4. The increases in the natural background phosphate

levels of the river resulting from the discharge of the blowdown will be less than the minimum detectable amount using the laboratory analytical procedures for total phosphate.[3] Therefore, the increased chemical concentrations in the plant effluent resulting from treatment of secondary system water will have no significant environmental impact.

(6) Component cooling water system - Sodium chromate will be used as a corrosion inhibitor in the closed component cooling water system. When necessary for maintenance purposes, the chromate-containing water will be drained from portions of the closed system. Whenever possible, the water will be returned to the system. If not, it will be routed to the radwaste system for processing. No chromate will be deliberately released from the plant. In the event of tube leakage in one of the component cooling water heat exchangers, chromate-containing water would leak to the raw cooling water and be discharged from the plant. Up to 1,000 gallons of component cooling water could be lost before an alarm showed that the level had dropped in the component cooling water surge tank and the leaking heat exchanger isolated. The chromate content of this water would be from 4 to 9 pounds, as CrO_4. The concentration in the plant effluent would depend on the leak rate. If the leak rate was 10 gpm, the addition to the plant effluent from this source would be about 4 to 9 ug/l and the concentration in the reservoir after mixing would be raised by 0.4 to 0.9 ug/l. With the existing and expected concentrations of chromate in Chickamauga Reservoir, release of this amount of chromate would not create a significant environmental impact.

(7) Reactor coolant system - Boric acid, lithium hydroxide, and hydrazine will be used in the reactor coolant system. Hydrazine will be used only during startup. Blowdown from this system will be processed as tritium-containing waste and recycled for reuse in the plant.

(8) Auxiliary steam generator blowdown - Two 40,000-pound-per-hour oil fired steam generators will be supplied. One steam generator is expected to operate on hot standby or under load continuously, and the other will operate intermittently during the year. Hydrazine will be added continuously to the feedwater as a dissolved oxygen scavenger. The hydrazine concentration in the feedwater will be about 10-15 ug/l and within the system is expected to be at less than detectable concentrations. Ammonia will be intermittently added to the feedwater for pH control. Blowdown rate will vary from 2,000 to 4,400 gallons per day total for both steam generators and will result in an annual discharge of ammonia of only about 5 pounds. This amount of ammonia would be undetectable in the discharge stream. The blowdown will be discharged to the condenser circulating water discharge stream.

(9) Chemical cleaning during construction - Chemical cleaning operations prior to unit startup will be conducted in such a way as to minimize releases to the reservoir and to ensure that any chemicals released have been neutralized and diluted to concentrations substantially below harmful levels. These procedures are described in section 2.7, Construction Effects.

(10) Miscellaneous - Most equipment cleaning and decontamination operations will be performed with high-pressure water and with detergent solutions. These liquids will be treated in the radwaste system by filtration and will be released to the cooling water discharge stream.

Some decontamination operations will involve the use of chemicals such as sodium phosphate, sodium permanganate, ammonium citrate, alkaline potassium permanganate, and nitric, citric, oxalic, acetic,

and hydrofluoric acids. Although the amounts of such chemicals cannot be determined at this time, they will not be discharged to the reservoir but will be drained to the chemical tank in the radwaste system. The solutions will be neutralized and either drummed directly or processed by evaporation and the concentrates drummed.

Inputs to the chemical drain tank in the radwaste system consist of laboratory drains and decontamination wastes. The principal chemical reagents used in the laboratory include sodium and ammonium hydroxides; hydrochloric, nitric, and sulfuric acids; ammonium acetate; and sodium carbonate.

Before the chemical drain tank is emptied, its contents are analyzed. If the liquid does not contain chemicals that would be harmful to the evaporator (principally, chlorides and sulfides) it will be processed in the auxiliary evaporator. The concentrates are drummed and the distillate is released to the reservoir in the usual manner. If the chemical drain tank contains chemicals that would be harmful to the evaporator, the contents are drummed without further processing. The contents of the tank would be released to the reservoir only when analysis shows that concentrations of chemicals present are within applicable effluent limitations and the radioactivity level is within acceptable limits. It is expected that release would be an infrequent event.

Usage of detergents will be minimized for laundry and similar uses. The detergent solutions will be filtered and discharged to the condenser circulating water discharge stream. Treatment and discharge of these detergent solutions in this manner are not anticipated to result in any significant environmental impacts.

(11) Alternatives considered for treatment of nonradioactive chemical wastes - As part of its environmental review for Sequoyah, TVA investigated alternative subsystems for treating the spent demineralizer wastes and the main steam generator blowdown. The alternative chemical treatment subsystems considered would be in addition to the treatment facilities already planned and would further reduce the already insignificant environmental impact of the proposed method of treatment and discharge of these wastes. The proposed method for disposing of the spent demineralizer regenerant wastes is to neutralize the regenerant solutions and then discharge them to the reservoir after mixing with condenser cooling water discharge or cooling tower blowdown. The proposed method for the disposal of the main steam generator blowdown will be to monitor it for radioactivity and to treat and dispose of it in the radwaste system if the radioactivity levels are above acceptable levels for discharge. If the radioactivity levels are low enough for discharge, the blowdown or reverse osmosis concentrate will be routed to the condenser cooling water discharge stream or cooling tower blowdown for mixing and discharge to Chickamauga Reservoir.

(a) Spent Demineralizer Regenerants - Basically, the alternative considered for the treatment of the spent regenerant solutions from the makeup demineralizers is evaporation. The evaporator distillate would be recycled to the makeup water treatment plant and the evaporator bottoms would be disposed of by burial. Although only one method was considered from an overall performance standpoint, two different subsystems schemes were evaluated from economic and design standpoint. The alternatives considered are as follows:

Alternative 1--All spent demineralizer regenerant chemicals, backwash, and rinse water would be neutralized and processed in an evaporator. The evaporator bottoms would be disposed of by burial in accordance with applicable standards. The total installed cost of the additional equipment for this system would be about $825,000 and the additional annual operating cost would be about $98,000. The present worth of the total economic cost required to implement this alternative would be about $2,000,000.

Alternative 2--Acid and caustic wastes from the demineralizers would be processed in an evaporator. The evaporator bottoms would be disposed of by burial in accordance with applicable standards. Demineralizer backwash and rinse would be routed to the makeup water treatment plant for further treatment. The total installed cost of the additional equipment for this system would be about $775,000 and the additional annual operating cost would be about $14,000. The present worth of the total economic cost required to implement this alternative would be about $938,000. Although the performance of these two alternatives is the same, the major economic advantage of alternative 2 is the reduced evaporator capacity and operating costs realized by the recirculation of the rinse and backwash water through the makeup water treatment plant.

The reduction in the sulfate, sodium, chloride, and total dissolved solids concentrations which would result by implementation of either of the alternatives for treatment of the spent demineralizer regenerants are shown in Table 2.5-4. The reductions in the effluent concentrations (as shown in Table 2.5-4) that would be realized

by implementing either alternative were less than the minimum detectable amounts of the analytical procedures[3,4] for respective laboratory procedures. For all modes of cooling system operation, the reduction in the concentration of the respective parameters in the river, after mixing, that would be realized by implementing the alternative treatment system, is less than the minimum detectable amounts of the analytical procedures.

When compared with the proposed method of treatment and discharge of the spent demineralizer regenerants, no beneficial impacts on water quality or the aquatic environment can be identified as resulting from the implementation of the alternative treatment methods. Implementation of either of the alternatives would result in impacts on other areas, such as land use, transportation, and resource commitments. Operation of an evaporator would also entail operation of an oil-fired auxiliary boiler with attendent gaseous emissions. TVA has concluded that the implementation of the alternative treatment method is not justified because of the negligible impacts that could be achieved, in relation to the required economic costs.

(b) Steam Generator Blowdown -

The alternative system considered for the treatment of the main steam generator blowdown was the removal by chemical precipitation (either alum or lime) of the phosphate contained in the blowdown. The precipitation equipment would be designed to handle the full flow rate of blowdown directly or the concentrates from the reverse osmosis unit. Preliminary design and economic studies indicate that the additional capital cost

of installing this treatment capability would be about $165,000. The average annual operation and maintenance cost would be about $8,000. The present worth of the total economic cost required to implement this alternative would be about $258,000.

A phosphate removal efficiency of 90 percent was used for purposes of evaluating performance of this treatment alternative. Although some minor reductions in the concentrations of other mineral parameters may occur in the precipitation process incidental to phosphate removal, no estimate of this removal was included in the performance evaluation. The reductions in the phosphate and total dissolved solids concentrations in the plant discharges and the river, after mixing, that would be realized by installation of chemical precipitation for the main steam generator blowdown are summarized in Table 2.5-4. For open- and helper-mode operation of the cooling system, the maximum reduction in both phosphate or total dissolved solids concentration of the effluent and the river, after mixing, would be less than 0.002 mg/l. This level of reduction is less than the accuracy of the analytical methods and the reporting procedures normally used for total phosphate.[3] For closed-mode operation of the cooling system the blowdown phosphate concentration would be reduced by less than 0.060 mg/l. The reduction in the phosphate concentration in the cooling tower blowdown before discharge to the river is less than 15 percent of the natural variations of phosphate concentrations that have been observed in the river. When mixed in the river, the reduction would be less than the minimum detectable amount of the total phosphate analytical procedure.[3]

When compared with the proposed method of treatment and discharge of the main steam generator blowdown, no identifiable beneficial impacts on water quality or the aquatic environment can be identified as resulting from the implementation of the alternative treatment method. Implementation of the alternative would result in impacts on other areas, such as land use, transportation, and resource commitments. TVA has concluded that the implementation of the alternative treatment method is not justified because of the negligible impacts that could be achieved, in relation to the required economic costs.

(c) Spent Demineralizer Regenerants and Main Steam Generator Blowdown - The reduction in the mineral concentrations in the plant effluent and in the river after mixing that would result with the implementation of the treatment alternatives for both the spent demineralizer regenerants and the steam generator blowdown are summarized in Table 2.5-4. Total dissolved solids is the only parameter which is common to the performance of either of the alternatives. However, the impact on dissolved solids resulting from implementation of both treatment alternatives is virtually the same as that for the spent demineralizer alternative only, i.e., the difference cannot be analytically measured. The conclusion regarding the implementation of both alternatives is the same as that concerning the implementation of the individual alternatives.

2. Yard drainage system - An area has been diked to provide a yard drainage pond with a surface area that will vary from 4 to 5 acres and is adjacent to and discharges into the discharge pond.

Any debris or oil which may be spilled and enter the yard drainage system will flow to this pond. An overflow weir with a skimmer structure has been provided so that floating debris and oil cannot escape from the pond. The solid material will be removed as necessary from the pond and disposed of in accordance with guidelines established for the disposal of solid waste. Oil will be reclaimed for reuse when practicable. If not suitable for reuse it will be drummed and held onsite for disposal by the most environmentally suitable method. Possible disposal methods include transporting the oil to one of TVA's conventional coal-fired plants and blending it with the fossil fuels used there.

The building drainage system (roof and high floor drains) drains into the storm drainage system and thence to the yard drainage pond. These drains will handle only innocuous materials and present no hazard to the environment.

The station sump also discharges to the yard drainage pond and would not normally handle any substances potentially detrimental to the environment. It may occasionally contain some oil which has leaked from some indoor machinery. Oil reaching the holding pool via this route will be reclaimed for disposal as described above.

3. Containment of hazardous liquids - The design of the Sequoyah Nuclear Plant is such that leakage, spillage, or container ruptures from any cause will not flow directly to Chickamauga Reservoir. Accidental releases of these liquids will either be contained in the immediate vicinity of the storage container until recovery or be routed to the yard drainage holding pond for recovery or treatment.

The probability of accidental releases from any cause will be minimized by operator surveillance, attendance of personnel during operations, and written instructions. TVA is presently preparing a general "Oil and Hazardous Materials Contingency Plan" for all TVA facilities as required by both Executive Order and Federal legislation. As part of this plan a separate "Spill Prevention, Control, and Countermeasure Plan" will be prepared for each individual facility, including Sequoyah Nuclear Plant. The storage of hazardous liquids at the plant will be kept to a minimum consistent with maintaining plant reliability. The types of liquids, the maximum amount, and the containment or control techniques used in the event of an accidental release are given in the following table.

Type of Liquid	Storage	Total Storage Capacity	Control of Accidental Release
Acrolein	2 cylinders	100 gallons	Contained in acrolein building
Sulphuric acid	1 tank	3,000 gallons	Tank enclosed by a dike
Sodium hydroxide	1 tank	3,300 gallons	Tank enclosed by a dike
Chlorine	6 cylinders	600 pounds	To yard drainage pond
Ammonia	10 drums	550 gallons	Tank enclosed by a dike
Hydrazine	10 drums	550 gallons	Tank enclosed by a dike
Diesel fuel	2 tanks	142,000 gallons	Tanks enclosed by a dike
Diesel fuel	16 tanks	271,800 gallons	Tanks are embedded in generator building floor
Diesel fuel	8 tanks	4,400 gallons	Drained to oil sump
Turbine oil	2 tanks	29,400 gallons	Drained to oil sump
Lubricating oil	2 tanks	29,000 gallons	Tanks enclosed by a dike
Askarel	All inside transformers		Enclosed by containing walls, drained to separate sump, then reused in the plant or returned to manufacturer for reprocessing or disposal

Arrangements will be made to retain stored hazardous chemicals in case of spillage. For sulfuric acid and sodium hydroxide, separate retaining pits will be provided to hold the entire stored volume of each chemical while steps are taken to containerize the spilled liquid or otherwise dispose of it in a safe controlled manner. For ammonia and hydrozine, a pit will be provided to hold the volume of the largest storage tank.

4. Sanitary wastes - Three extended aeration sewage treatment facilities have been installed for use during the construction period to treat the domestic wastes from a peak construction force of approximately 2,000 persons. Effluent from the plant is chlorinated before entering the river. These treatment facilities have been complemented by portable-type chemical toilets for use in isolated or remote areas of the project site. The servicing contractor is required to dispose of raw sewage in a manner which is environmentally acceptable. Generally, these waste are collected in contractor-owned tank trucks and are hauled to a local community sewage treatment plant for disposal. At the end of construction these initially installed facilities will be removed to storage, surplus, or new construction.

Secondary treatment facilities consisting of a septic tank and subsurface filters and with provision for chlorination will be provided for the permanent plant. After treatment, the effluent will be discharged to the yard drainage pond. It is estimated that the ultimate operation force will number 250 permanent employees. The treatment facility will be designed to handle approximately 425 persons including permanent and temporary employees and visitors. During periods when a large temporary maintenance force is working at the plant, the permanent waste treatment will be supplemented by portable-type toilets.

Both construction and permanent systems will be operated to prevent untreated effluents from entering the river. The design will be in accordance with approved sanitation standards applicable to TVA facilities and will meet Tennessee Pollution Control Board requirements.

TVA routinely sends plans of its sanitary waste treatment facilities to the appropriate state pollution control organization for their information and files.

5. Gaseous emissions - If each oil-fired auxiliary steam generator were assumed to operate continuously at 100 percent capacity, such operation would result in both units burning a total of 6.6×10^6 gallons per year (750 gals/hr) of No. 2 fuel oil having a sulfur content of about 0.5 percent. The boilers are each rated at 40,000 lb/h steamflow with an input rating of about 53.2×10^6 Btu/h.

The following emission rates, based on the above assumptions, were used to calculate ambient pollutant concentrations:

Particulates	6.0 lb/h
Sulfur oxides	5.86 lb/h
Carbon monoxide	0.03 lb/h
Hydrocarbons	1.5 lb/h
Nitrogen oxides	254.04 ton/yr

The emissions will be released through a stack which is approximately 108 feet above ground level.

Calculated maximum ambient pollutant concentrations resulting from these emissions, together with the applicable ambient standards, are given below.

Pollutant	Averaging Time	Calculated Concentrations	Secondary Ambient Standards
Particulates	24-hour	0.28 ug/m^3	150 ug/m^3
Sulfur oxides	24-hour	1.07×10^{-4} ppm	0.14 ppm
Carbon monoxide	1-hour	9.83×10^{-6} ppm	35 ppm
Hydrocarbons	3-hour	3.58×10^{-4} ppm	0.24 ppm
Nitrogen oxides	1-hour	8.72×10^{-5} ppm	0.05 ppm

From this evaluation of the emissions from the auxiliary boilers and considering that they will be operated much less than full capability, it can be seen that the emissions will have negligible environmental impact.

6. Nonradiological environmental monitoring program - A quarterly preoperational environmental monitoring program was initiated in May 1971 to establish a baseline of biological and water quality conditions in the vicinity of the plant site. The design of the operational monitoring program will be based on results from the preoperational monitoring program and from experience acquired during operation of similar programs at other plant sites.

The preoperational biological and water quality monitoring programs are summarized in Tables 2.5-5 and 2.5-6 respectively.

The nonradiological biological monitoring program designed for Sequoyah is not intended to provide cause and effect types of information. Rather, the monitoring program has as its major objectives: the determination of significant changes in the relative abundance and/or species, diversity, and composition of bottom fauna, plankton, and periphyton.

Since many of the details of the environmental monitoring programs are closely related to the final plant design, the monitoring programs are necessarily tentative. As details of the final plant design are completed, the respective environmental monitoring programs will be reevaluated and modified as needed to ensure adequate environmental monitoring programs. The resulting monitoring programs will be reviewed and coordinated with the appropriate agencies.

REFERENCES

1. J. F. Walko, J. M. Donohue, B. F. Shema, "Biological Control in Cooling Systems--New Developments and Pollution Considerations," presented at the International Water Conference, 32nd Annual Meeting, Pittsburg, Pennsylvania, November 2, 1971.

2. "Coagulant Aids for Water Treatment," Journal of American Water Works Association, Volume 63, pp. 388-389.

3. Methods for Chemical Analysis of Water and Wastes, 1971, Environmental Protection Agency, National Environmental Research Center, Cincinnati, Ohio.

4. Standard Methods (13th edition; New York: American Public Health Association, 1971).

TABLE 2.5-1

SUMMARY OF "ADDED" CHEMICALS AND RESULTING END PRODUCTS

SEQUOYAH NUCLEAR PLANT

System	Chemical Treatment Source	Maximum Use [a] Pounds Annual	Maximum Use [a] Pounds Daily	Waste End Product Chemical	Resulting End Product - Pounds Maximum Annual	Resulting End Product - Pounds Average Daily
Makeup Water Treatment Plant	Alum $Al_2(SO_4)_3 \cdot 18H_2O$	63,950	175	$Al(OH)_3$ [b]	14,580	40
				SO_4^{--}	27,700	76
	Soda Ash Na_2CO_3	24,000	66	Na^+	10,410	29
	Chlorine (Cl_2)	12,780	35	OCl^-, Cl^-	12,780	35
				Settled Solids [b] [c]	44,750	120
Makeup Demineralizer System	H_2SO_4 (100%)	241,000	660	SO_4^{--}	236,000	650
	NAOH (100%)	192,000	531	Na^+	110,000	300
Natural [c] Minerals Removed	Sulfates	23,500	64	SO_4^{--}	23,500	64
	Sodium	9,670	26	Na^+	9,670	26
	Chlorides	19,300	53	Cl^-	19,300	53
	Total Dissolved Solids	121,500	330	Total Dissolved Solids	121,500	330
Main Steam Generator Blowdown [d]	Sodium Phosphate Na_2HPO_4	13,200	36	Na^+	4,350	11
				PO_4^{---}	8,850	25
	Ammonia	1,100	3	NH_3	280 [g]	.8
	Hydrazine	4,100 [g]	11			
Auxiliary Steam [d] Generator Blowdown	Ammonia NH_3	175	0.5	NH_3	4.3 [g] [h]	-
	Hydrazine H_2NNH_2	175	0.5			
Raw Cooling Water	Acrolein [i] $CH_2 = CHCHO$	803	2.2	Acrolein	803	2.2
Essential Raw Cooling Water	Acrolein [i] $CH_2 = CHCHO$	1,970	5	Acrolein	1,970	5

a. All values are based on maximum capacity of equipment; 365-day operation.
b. Precipitated material that will be produced by makeup water treatment plant on a dry weight basis.
c. Estimates based on 100% removal of river water constituents in the specific system.
d. Chemical poundage for this system is based on operating one boiler at maximum capacity 365 days per year.
e. Sodium phosphate will be added to maintain a residual of 15 mg/l.
f. Ammonia will be added to maintain a pH of 9.0.
g. Hydrazine will be added to control dissolved oxygen in the system. Hydrazine is assumed to decompose to ammonia.
h. Ammonia will be rejected through the air vapor outlet.
i. Acrolein will be added 1/2 hour per day for a maximum of 120 days per year.

Table 2.5-2

SUMMARY OF "ADDED" INORGANIC CHEMICAL DISCHARGES USING PROPOSED METHOD OF TREATMENT AND DISCHARGE

SEQUOYAH NUCLEAR PLANT

Waste Product Chemical	Average Daily[a] Discharge of Product Chemical lbs	Operating[b] Mode Open (O) Helper (H) Closed (C)	Waste[b] Product Chemical Contribution to Discharge Concentrations mg/l	Summary of[c] Observed Concentrations in Reservoir Water at TRM 472.3 mg/l Minimum	Average	Maximum	Total Discharge[b] Concentrations CF=2 for Closed Mode mg/l Average	Maximum	Total[d] Concentrations in River After Mixing mg/l Average	Maximum	Maximum[e] Allowable Guidelines Effluent mg/l	Stream mg/l
Sulfates (SO_4^{--})	790	O	0.059	11.8	18.1	30.4	18.159	30.459	18.110	30.410	1400	250
		H	0.059				18.159	30.459	18.130	30.430		
		C	2.090				38.290	62.890	20.119	33.649		
Sodium (Na^+)	366	O	0.027	3.0	6.99	11.0	7.017	11.027	6.9945	11.0045	f	100
		H	0.027				7.017	11.027	7.0035	11.0135		
		C	0.968				14.948	22.968	7.7858	12.1968		
Chlorides[g] (Cl^-)	88	O	0.0065	4.30	12.83	21.6	12.8365	21.6065	12.8311	21.6011	f	250
		H	0.0065				12.8365	21.6065	12.8333	21.6033		
		C	0.2328				25.8928	43.4328	14.1363	23.7833		
Ammonia[h] (NH_3)	0.8	O	0.00006	0.01	0.05[i]	0.16[i]	0.05006	0.16006	0.05001	0.16001	5.0	0.5
		H	0.00006				0.05006	0.16006	0.05003	0.16003		
		C	0.00212				0.10212	0.32212	0.05521	0.17621		
Phosphates (PO_4^{---})	25	O	0.00185	0.06	0.15[i]	0.48[i]	0.15185	0.48185	0.15031	0.48031	3[j]	0.03[j]
		H	0.00185				0.15185	0.48185	0.15093	0.48093		
		C	0.06614				0.36614	1.02614	0.17161	0.53461		
Acrolein[k]	7.2	O	0.025	0.0	0.0	0.0	0.025	0.025	0.0042	0.0042	1	0.006[l]
		H	0.025				0.025	0.025	0.0125	0.0125		
		C	0.048				0.048	0.048	0.0048	0.0048		
Total Dissolved Solids	1482	O	0.1098	66	91	128	91.1098	128.1098	91.0183	128.0183	m	500
		H	0.1098				91.1098	128.1098	91.0549	128.0549		
		C	3.9206				185.9206	259.9206	100.4921	141.1921		

a. Based on 24-hour operation 365 days per year at demonstrated maximum capacity of equipment and chemical requirements.
b. Discharge flows based on 2-unit full load operation. Total plant discharge = 2,500 ft^3/s for both open and helper modes. Blowdown = 70 ft^3/s for closed mode.
c. Data taken from Quality of Water in Chickamauga Reservoir, TVA, Division of Health and Safety, July 1964.
d. Ratios for mixing are: 5 volumes reservoir water to one volume discharge water in the open mode; one volume reservoir water to one volume discharge water for the helper mode; and 9 volumes reservoir water to one volume discharge water in the closed mode.
e. Tennessee Division of Water Quality Control guidelines.
f. No specific guideline has been identified but contribution to dissolved solids has been included.
g. Computation is for chlorides since the water containing residual chlorine will be processed by the demineralizers.
h. Ammonia and hydrazine added to steam generator for pH and dissolved oxygen control. Hydrazine conservatively assumed to decompose to ammonia.
i. Data observed at TRM 483.6 between December 1969 and December 1970. From Mineral Quality of Surface Waters in the Tennessee River Basin, TVA, May 1972. Ammonia expressed as mg/l as N, phosphates expressed as mg/l as PO_4.
j. When phosphate criteria are applicable, the guidelines are those stated or natural background, whichever is higher.
k. It is expected that acrolein will not be needed more than 120 days per year. It will be fed to the raw cooling water and essential raw cooling water systems for ½ hour each day to achieve a maximum concentration of 0.3 mg/l within these systems. Concentrations shown are for the ½-hour feed period and are based on dilution within the condenser cooling system only.
l. There is no published guideline for acrolein. Stated value is 10 percent of the reported 96-hour TLm for fathead minnows.
m. No specific effluent guideline has been identified.

Table 2.5-3

SUMMARY OF OBSERVED TRACE METAL CONCENTRATIONS AND EXPECTED MAXIMUM TRACE METAL CONCENTRATIONS IN THE DISCHARGE AND AT THE EDGE OF THE MIXING ZONE

SEQUOYAH NUCLEAR PLANT

Parameter (Dissolved)	Number of Observations[a]	Summary of Observed Concentrations, ug/l[a] TRM 484.3			Operating[b] Mode	Maximum Expected Trace Metal Concentration, ug/l[c]		State of Tennessee Guidelines, ug/l[d]	
		Minimum	Median	Maximum		Discharge	After Mixing	Effluent	Stream
Total Iron	11	280	450	710	O-H C	710 1420	710 781	10,000	300[e]
Manganese	8	50.0	65	90.0	O-H C	90 180	90 99	10,000	50[e]
Copper	11	<10	<10	20	O-H C	20 40	20 22	1,000	20
Zinc	11	20	50	150	O-H C	150 300	150 165	2,000	100
Chromium	11	<5	<5	<50	O-H C	<50 <100	<50 <55	3,000	50
Nickel	11	<50	<50	<50	O-H C	<50 <100	<50 <55	3,000	100
Aluminum	4	700	1100	1200	O-H C	1200 2400	1200 1320	250,000	1,000
Silver	4	<10	<10	<10	O-H C	<10 <20	<10 <11	50	5
Lead	4	<10	<10	<10	O-H C	<10 <20	<10 <11	100	50
Mercury	4	<0.2	0.2	0.4	O-H C	0.4 0.8	0.4 0.44	5	5
Barium	4	<100	<100	<100	O-H C	<100 <200	<100 <110	5,000	1,000[e]
Arsenic	4	<5	<5	<5	O-H C	<5 <10	<5 <5.5	1,000	10[e]
Cadmium	4	<1	<1	<1	O-H C	<1 <2	<1 <1.1	10	10
Selenium	4	<1	1	1	O-H C	1 2	1 1.1	10	10
Beryllium	4	<10	<10	<10	O-H C	<10 <20	<10 <11	f	f

a. Includes samples taken at 3 and 39-foot depths. See Table 1.2-12 for observed data.

b. O - Open, cf (concentration factor) = 1.0; H - Helper, cf = 1.0; and C - Closed, cf = 2.0.

c. Concentrations based on maximum observed value of parameter. Mixing ratios are five volumes reservoir water to one volume discharge water in open mode; one volume reservoir water to one volume discharge water in helper mode; and nine volumes reservoir water to one volume discharge water in closed mode.

d. Tennessee Water Quality Control Board Guidelines obtained by letter dated January 19, 1973.

e. Guideline for streams classified for domestic water supply.

f. No guideline established.

TABLE 2.5-4

PERFORMANCE SUMMARY OF ALTERNATIVES FOR THE TREATMENT OF "ADDED" INORGANIC CHEMICAL WASTES AND COMPARISON WITH THE PROPOSED METHOD

SEQUOYAH NUCLEAR PLANT

Parameter	Observed Chemical Concentrations in Reservoir Water at TRM 472.3 mg/L Average	Observed Chemical Concentrations in Reservoir Water at TRM 472.3 mg/L Maximum	Operating Mode O - Open H - Helper C - Closed	Treatment of Demineralizer Waste Stream[A]: Average Daily Contribution to Discharge mg/L	Treatment of Demineralizer Waste Stream[A]: Total Chemical Concentrations[C] Discharge mg/L Average	Discharge mg/L Maximum	River After Mixing mg/L Average	River After Mixing mg/L Maximum	Reduction in Concentrations as Compared to Proposed Method: Discharge mg/L	Reduction: River After Mixing mg/L	Treatment of Main Steam Generator Blowdown[B]: Average Daily Contribution to Discharge mg/L	Treatment of Main Steam Generator Blowdown[B]: Total Chemical Concentrations[C] Discharge mg/L Average	Discharge mg/L Maximum	River After Mixing mg/L Average	River After Mixing mg/L Maximum	Reduction in Concentrations as Compared to Proposed Method: Discharge mg/L	Reduction: River After Mixing mg/L	Treatment of Demineralizer Waste Stream and Main Steam Generator Blowdown: Average Daily Contribution to Discharge mg/L	Treatment of Demineralizer Waste Stream and Main Steam Generator Blowdown: Total Chemical Concentrations[C] Discharge mg/L Average	Discharge mg/L Maximum	River After Mixing mg/L Average	River After Mixing mg/L Maximum	Reduction in Concentrations as Compared to Proposed Method: Discharge mg/L	Reduction: River After Mixing mg/L
Sulfates (SO_4^{--})	18.1	30.4	O	0.0	18.1	30.4	18.1	30.4	0.059	0.01	0.059	18.159	30.459	18.110	30.410	0.0	0.0	0.0	18.1	30.4	18.1	30.4	0.059	0.01
			H	0.0	18.1	30.4	18.1	30.4	0.059	0.03	0.059	18.159	30.459	18.130	30.430	0.0	0.0	0.0	18.1	30.4	18.1	30.4	0.059	0.03
			C	0.0	36.2	60.8	19.91	33.44	2.09	0.209	2.090	38.290	62.890	20.119	33.649	0.0	0.0	0.0	36.2	60.8	19.91	33.44	2.09	0.209
Sodium (Na^+)	6.99	11.0	O	0.0008	6.9908	11.0008	6.9901	11.0001	0.0262	0.0044	0.027	7.017	11.027	6.9945	11.0045	0.0	0.0	0.0008	6.9908	11.0008	6.9901	11.0001	0.0262	0.0044
			H	0.0008	6.9908	11.008	6.9904	11.0004	0.0262	0.0131	0.027	7.017	11.027	7.0035	11.0135	0.0	0.0	0.0008	6.9908	11.0008	6.9904	11.0004	0.0262	0.0131
			C	0.029	14.009	22.029	7.692	12.103	0.939	0.0938	0.968	14.948	22.968	7.7858	12.1968	0.0	0.0	0.029	14.009	22.029	7.692	12.103	0.939	0.0938
Chlorides (Cl^-)	12.83	21.6	O	0.0	12.83	21.6	12.83	21.6	0.0065	0.0011	0.0065	12.8365	21.6065	12.8311	21.6011	0.0	0.0	0.0	12.83	21.6	12.83	21.6	0.0065	0.0011
			H	0.0	12.83	21.6	12.83	21.6	0.0065	0.0033	0.0065	12.8365	21.6065	12.8333	21.6033	0.0	0.0	0.0	12.83	21.6	12.83	21.6	0.0065	0.0033
			C	0.0	25.66	43.2	14.113	23.76	0.2328	0.0233	0.2328	25.8928	43.4328	14.1363	23.7363	0.0	0.0	0.0	25.66	43.2	14.113	23.76	0.2328	0.0233
Phosphates (PO_4^{---})	0.15	0.48	O	0.00185	0.15185	0.48185	0.15031	0.48031	0.0	0.0	0.00019	0.15019	0.48019	0.15003	0.48003	0.00166	0.00028	0.00019	0.15019	0.48019	0.15003	0.48003	0.00166	0.00028
			H	0.00185	0.15185	0.048185	0.15093	0.48093	0.0	0.0	0.00019	0.15019	0.48019	0.15010	0.48010	0.00166	0.00083	0.00019	0.15019	0.48019	0.15010	0.48010	0.00166	0.00083
			C	0.06614	0.36614	1.02614	0.17161	0.53461	0.0	0.0	0.00661	0.30661	0.96661	0.16566	0.52866	0.05953	0.00595	0.00661	0.30661	0.96661	0.16566	0.52866	0.05953	0.00595
Total Dissolved Solids	91	128	O	0.0027	91.0027	128.0027	91.0005	128.0005	0.1071	0.0178	0.1081	91.1081	128.1081	91.0180	128.0180	0.0017	0.0003	0.0011	91.0011	128.0011	91.0002	128.0002	0.1087	0.0181
			H	0.0027	91.0027	128.0027	91.0014	128.0014	0.1071	0.0535	0.1081	91.1081	128.1081	91.0541	128.0541	0.0017	0.0008	0.0011	91.0011	128.0011	91.0006	128.0006	0.1087	0.0543
			C	0.0974	182.0974	256.0974	100.1097	140.8097	3.8232	0.3824	3.8611	185.8611	259.8611	100.4861	141.1861	0.0595	0.0060	0.0378	182.0378	256.0378	100.1038	140.8038	3.8828	0.3883

A. TREATMENT WOULD CONSIST OF EVAPORATION OF THE DEMINERALIZER WASTE STREAM. EVAPORATOR BOTTOMS WOULD BE DISPOSED OF IN ACCORDANCE WITH APPLICABLE STANDARDS.

B. TREATMENT WOULD CONSIST OF A PRECIPITATOR THAT WOULD REMOVE 90 PERCENT OF THE PHOSPHATE FROM THE WASTE STREAM. THE PHOSPHATE SLUDGE WOULD BE DISPOSED OF IN ACCORDANCE WITH APPLICABLE STANDARDS.

C. CALCULATIONS MADE USING THE SAME ASSUMPTIONS USED FOR TABLE 2.5-2.

Table 2.5-5

SUMMARY OF QUARTERLY NONRADIOLOGICAL PREOPERATIONAL
AND OPERATIONAL WATER QUALITY MONITORING PROGRAM

Station	Distance From Left Bank (Normal Full Pool Elevation) Feet	Percent	Depths of Water[1] Meters
496.5	1,300	30	1, 4
	2,500	57	1, 3, 5, 8
490.5	800	21	1,3
	2,200	59	1, 4, 7, 9
	3,200	85	1, 4, 7, 9
484.1	1,064	40	1, 3
	1,730	66	1*, 4, 8, 12*, 14
483.5	598	23	1, 4, 8, 12, 15
483.4	266	11	1, 4, 8, 12, 15
	435	17	1, 4, 8, 12, 15
	1,264	51	1, 3
480.8	500	10	1, 3
	3,700	74	1, 4, 8, 12, 14
	4,600	92	1, 3
478.2	4,300	83	1, 5, 10, 15, 18
477.9	1,660	15	1, 3, 5
	3,360	30	1, 2, 3
472.8	470	9	1, 3, 5, 7
	3,216	65	1, 8
	4,442	89	1, 3, 7, 9, 13

1. Temperature observed throughout each vertical to limit differences between successive observations to 2°F. Dissolved oxygen measured at all depths listed; additional samples collected if an appreciable change is found.

* Analyses include but are not limited to the following parameters: pH, alkalinity, BOD, COD, color, turbidity, conductance, SiO_2, Ca, Mg, hardness, Na, K, Cl, F, SO_4, nitrogen, phosphate, Fe, Mn, Cu, Zn, Cr, Ni.

Table 2.5-6

BIOLOGICAL SAMPLING SCHEDULE (NONRADIOLOGICAL) -

SEQUOYAH NUCLEAR PLANT, CHICKAMAUGA RESERVOIR

Station or TRM	Horizontal Location[1/]	Depths (meters) for Zooplankton,* Chlorophyll,* Phytoplankton Cell Counts,** and C-14**	Benthic Fauna	Autotrophic-Heterotrophic Indices
496.5	R-LM	0, 1, 3, 5	10	2
490.47	R-LM	0, 1, 3, 5	10	2
484.10	R-LM	0, 1, 3, 5	10	2
483.40	R-LM	0, 1, 3, 5	10	2
480.82	R-LM	0, 1, 3, 5	10	2
477.93	R-LM	0, 1, 3, 5	10	2
472.80	R-LM	0, 1, 3, 5	10	2

1. Horizontal location looking downstream: R-LM = area from right shore to left middle of stream.

*Replicate zooplankton samples are taken with a No. 20 net by hauling it vertically from the bottom to the surface.

**Taken at same depth within the euphotic zone only--0, 1, 3, and 5 meters.

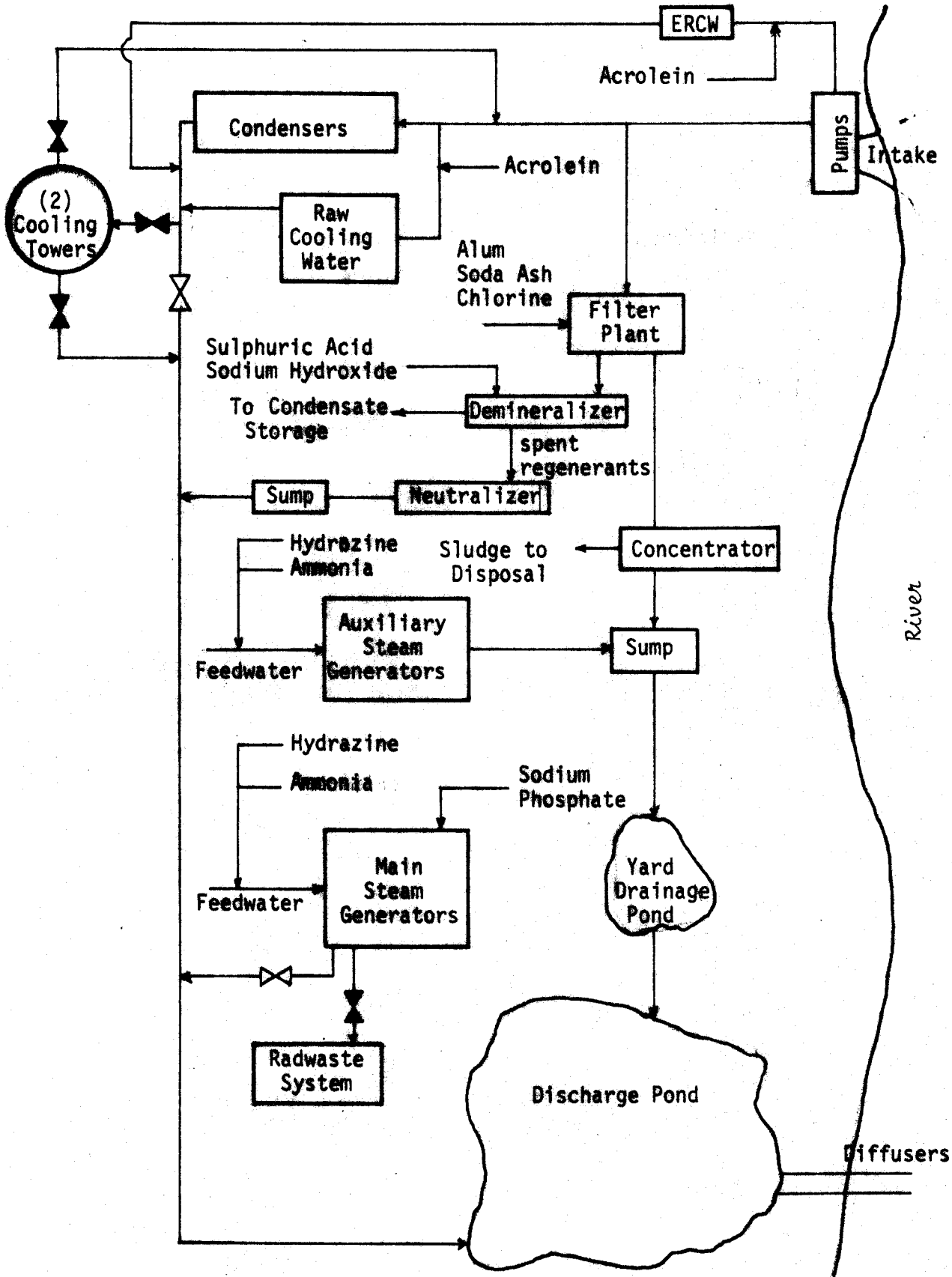

Figure 2.5-1

SOURCES OF CHEMICAL ADDITIONS

SEQUOYAH NUCLEAR PLANT

2.6 Heat Dissipation - All steam-electric generating plants must release heat to the environment as a consequence of producing electricity. A portion of the thermal energy produced in the reactor will be converted to electrical energy through the turbine generator, while the remainder is absorbed by cooling water flowing through the condenser. In the current state of technological development in nuclear plants, approximately two-thirds of the heat produced in the reactor is released to the environment.

The facilities for dispersing this warmed condenser water into Chickamauga Reservoir have been planned to adequately protect the receiving waters for the following uses: municipal, industrial, and agricultural water supply; propagation of warm water fish and other aquatic life; water-contact recreation; navigation; and the final disposal of treated municipal and industrial wastes. Of these uses, the propagation of warm water fish and other aquatic life was judged to be the one requiring the highest degree of protection from thermal effects.

1. Water temperature standards - The proposed temperature criteria of the State of Tennessee at the time of the initial planning were as follows:

Water Use	Temperature Specifications
Public Water Supply Water-Contact Recreation Fish and Wildlife Industrial Water Supply	The temperature of the water shall not exceed 93°F and the maximum rate of change shall not exceed 3°F per hour. (The maximum temperature of recognized trout streams shall not exceed 68°F.) In no case shall the maximum temperature rise be more than 10°F above the stream temperature which shall be measured at an upstream control point.

Water Use	Temperature Specifications
Agricultural Water Supply	The temperature of the water shall not be raised or lowered to such an extent as to interfere with its use.

These proposed criteria were excepted from approval by the Federal Water Pollution Control Administration (now the Water Quality Office of the EPA). On December 14, 1971, the Tennessee Water Quality Board adopted revised temperature criteria for the fish and wildlife water use classification as follows:

> Temperature - The maximum water temperature change shall not exceed 3°C (5.4°F) relative to an upstream control point. The temperature of the water shall not exceed 30.5°C (86.9°F) and the maximum rate of change shall not exceed 2°C (3.6°F) per hour. The temperature of recognized trout waters shall not exceed 20°C (68°F). There shall be no abnormal temperature changes that may affect aquatic life unless caused by natural conditions. The temperatures of impoundments where stratification occurs will be measured at a depth of 5 feet, or mid-depth whichever is less, and the temperature in flowing streams shall be measured at mid-depth.[1]

These revised thermal criteria were approved by EPA on June 9, 1972.

TVA has determined that the diffuser system is not adequate to ensure acceptable conformance with the 5.4°F rise and 86.9°F maximum temperature. The alternatives for heat dissipation which are described in the Sequoyah Nuclear Plant draft environmental statement have been reevaluated, and it has been decided that the best long-term solution to meet the more stringent standards is to supplement the diffuser system by the installation of natural draft cooling towers with the capability of operating in the open, helper, and closed modes.

Construction of the towers will require about 40 months to design and construct, and the plant will be operated using a diffuser system only until the cooling towers are ready. However, TVA will operate

the plant to comply with the applicable thermal standards both during the interim period and after tower construction is complete.

To assure that the thermal criteria of the Tennessee water quality standards are not violated and to provide documentation of reservoir temperatures, TVA has installed a network of 10 temperature monitors in Chickamauga Reservoir (see figure 2.6-1). Each of the stations will have temperature sensors 1/2 foot below the surface, at a point 5 feet below the water surface, at the bottom, and at several other intermediate points. A computer control data logger receives the temperature data which are printed on teletype and punched on paper tape. The paper tapes are sent to the computer center for processing. Printouts of the data are then sent to the Division of Environmental Planning for validation and analysis and to the Division of Power Resource Planning.

2. Description of heat dispersal facilities - It was recognized early in the plant design stages that the condenser water should not be discharged directly into the surface strata of Chickamauga Reservoir. Instead, it was decided that, by means of a diffuser system, the condenser water should be mixed as quickly as possible with as much unheated river water as possible. By this procedure, no excessively warm surface strata would exist and the mixing zone would be restricted to a relatively small area. Based on hydraulic model tests at the Massachusetts Institute of Technology and at TVA's Engineering Laboratory, the diffuser system would have enabled the plant to operate and meet the originally proposed $10^{\circ}F/93^{\circ}F$ thermal standards.

As shown on figure 1.1-2 and 2.6-2, heat dispersal facilities consist of an intake skimmer wall, a water intake embayment, condenser water pumps capable of a flow of 2,500 ft^3/s for full 2-unit operation, pipes leading to a turbine condenser, a 29.5°F rise turbine condenser, two natural draft cooling towers, discharge pipes leading to a small pond formed by diking an embayment, two discharge pipes leading from the pond to the underwater diffusers in Chickamauga Reservoir, and an underwater dam upstream from the diffusers.

The intake skimmer wall, which is about 6,500 feet upstream from the diffuser. has a clear opening length of 550 feet and an opening height of approximately 9 feet 8 inches. The top of the opening is at elevation 641. The skimmer wall is designed to allow withdrawal of the cooler water in the lower layer of Chickamauga Reservoir. Because of the skimmer wall, the temperature of the water in the intake canal will normally be less than the temperature of the reservoir surface at the intake. At the 2-unit condenser flow of 2,500 ft^3/s, the velocity through the skimmer wall opening will be about 0.5 ft/s.

A trapezoidal intake channel leads from the intake embayment to the intake structure. For full 2-unit operation in the open and helper modes, the maximum average cross section velocity in the intake channel will be about 2.7 feet per second. Intake channel velocities will be reduced to one-half of this value for 1-unit operation in the open and helper modes. During closed-mode operation these velocities will be about 6 percent of the above values. The intake structure consists of 6 bays that have net openings of 15 feet 4 inches by 23 feet 6 inches; thus the average velocity will be about 1.2 feet per second during the 2-unit operation and is independent of the reservoir elevation. The maximum

average velocity through the traveling screens which have net openings 3/8 inch by 3/8 inch will be about 2.2 feet per second during the April-September period. Bay and screen velocities will remain the same regardless of the number of units operating.

The use of natural draft cooling towers will require two cooling towers each 413 feet in diameter at the base by 516 feet high for the open, helper, closed combined system. Figure 1.1-2 shows the location and arrangement of the two natural draft towers on the plant site. The use of cooling towers will require the relocation of the emergency raw cooling water intake. Two alternative locations are being considered and these are shown on figure 1.1-2. (Only alternative proposal number 2 is shown on the figures in section 2.6.)

The surface area of the discharge pond is about 32 acres, which is not sufficient for any significant heat loss to take place. To provide sufficient hydraulic head for the operation of the diffuser pipes, the pond elevation will be held about 7 feet higher than the reservoir. The top of the dike forming the pond will be at elevation 700. An overflow section is provided with a crest at elevation 695. This spillway is provided to allow flow into and out of the pond during rising and falling stages of extreme floods on the river. Flow-control facilities will be provided in the outlet structure in the dam forming the discharge pond so that flow from one unit can be discharged through either one or two diffusers.

Two discharge pipes having diameters of 16 and 17 feet lead from the discharge pond to the diffuser sections which will be located in the main 900-foot wide by 50-foot deep navigation channel. Each of the actual diffuser sections will be 350 feet long

and contain several thousand 2-inch diameter ports on 6-inch by 6-inch spacings, through which the heated water will be discharged at a velocity of about 10 ft/s. Diffusion will take place across the 700 feet of the channel nearest the plant. The diffuser sections will be laid on a low crushed stone fill such that the discharge ports will be approximately 12 feet above the riverbed. The minimum submergence over the top of the diffuser pipes will be 31.5 feet.

The crushed stone backfill is used under and around the diffuser pipes for the following reasons:

1. To provide unifor. bedding for the pipes on the reservoir bottom.

2. To stabilize the pipes against hydro-dynamic forces caused by turbulence resulting from rotating screws on barge tugs.

   Laboratory model testing determined that forces created by tugs passing over the diffuser pipes would lift the pipes and roll them horizontally. Anchorage for the vertical forces is provided by continuous rows of concrete beams on each side of each pipe with wire ropes extending over the top of each pipe and being anchored to each beam. The weight of the crushed stone above the anchor beams is utilized to minimize the size of the anchor beams. The crushed stone is placed around the pipes to a height sufficient to provide horizontal stability against hydro-dynamic forces from a tug.

3. To reduce horizontal forces on the pipes as a result of the current in the reservoir.

4. To reduce siltation which would result from the vertical barrier effect of the pipes without fill.

   The slopes of the fill are made 3 horizontal to 1 vertical to provide for a smooth flow transition across the pipes (see figure 2.6-2).

   It is to be noted that the effect of the diffuser pipes and crushed stone fill will not be to increase siltation, but rather to decrease siltation at this point due to increased velocities in the vicinity of the diffusers.

5. To provide stability for vibration forces which may occur as a result of water being discharged through the ports in the pipes.

An alternate method of stabilizing the diffuser pipes against hydrodynamic forces is by the use of cables which extend upstream and downstream and are anchored into rock in the reservoir bottom. This would eliminate the crushed stone fill except for that required for uniform bedding in the reservoir bottom.

When compared to the method being used, this alternate method has two very significant disadvantages. The first is that the cable size increases since the direction of the cable is at an angle to the direction of the force (as opposed to the cable being in line with the force) with the result that this method would be more costly. The second is that the elimination of the crushed stone surrounding the pipes would create a vertical barrier effect with the resulting potential for more siltation. It is concluded that the method being used is more desirable both economically and environmentally.

Approximately 250 feet upstream from the diffusers, an underwater dam will be constructed across the main channel. The underwater dam will be constructed by dumping quarry run rock from a barge. TVA estimates that the side slopes will not be greater than 1.5 horizontal to 1 vertical. For this side slope, the underwater dam will cover an area of approximately 90 feet wide by 900 feet long. The crest of the dam will be at elevation 654. The underwater dam will serve two purposes: (1) it will decrease the thickness of the upstream warm water wedge which forms at low reservoir flows; and (2) it will impound the cooler water in the lower layer of the reservoir making the cooler water available to the plant intake.

3. Present thermal regime of Chickamauga Reservoir - Analysis of historical water temperature data for Chickamauga Reservoir shows that in the reservoir downstream from Sequoyah, weak stratification may exist during the warm summer months. This stratification is caused by a combination of cool reservoir inflows and natural heating processes. Because of the large cross sectional area of the reservoir, velocities are low, and the water is exposed to solar and atmospheric heating for a long period of time. The surface waters are warmed more rapidly than the underlying water creating a density difference, with the warmer, less dense water floating on the cooler water. As the density difference increases, the stability, or resistance of the layer to mixing increases.

Calculations indicate that surface water temperatures in the lower reach of Chickamauga Reservoir during the period of stratification are near equilibrium, i.e., the temperature at which there is no net heat exchange between the water and the atmosphere.

The temperature of the underlayer of water in Chickamauga Reservoir during the summer is below equilibrium temperature because it originates primarily from cool releases from the upstream tributary dams.

Water temperatures in Chickamauga Reservoir have been monitored by TVA recording stations since 1969. The recorded temperatures ranged at TRM 485.7 from about 40°F in the winter to a typical maximum of 80°-84°F in the summer with an occasional maximum as high as 88°F. The temperatures were recorded at elevation 677, which is about 6 feet below the normal summer pool elevation. Table 1.2-13 shows the observed monthly maximum and minimum temperatures in Chickamauga Reservoir for the period 1969-72.

Flow at the Sequoyah site is controlled principally by operation of Watts Bar and Chickamauga Dams and by inflows from the Hiwassee River. The duration of zero flow periods at Chickamauga and Watts Bar Dams for the period 1959-68 is shown in Table 1.2-10.

The duration and frequency of hourly flows at the Sequoyah site for given hourly releases from Watts Bar and Chickamauga may be obtained only by a complex and extensive calculation. These calculations using historical flow data would be meaningless for prediction purposes because the future operation of Watts Bar and Chickamauga Dams may be changed to obtain the most economical combined operation of the hydroelectric stations and the Sequoyah Nuclear Plant which will meet the temperature standard. The precise nature of these changes in hydro plant operation are not known at this time and will be determined from operating experience after plant operation begins and from a study of the relative economy of hydro plant operation changes versus use of the cooling towers. The hourly flow duration curves for 10 years of record, 1959-68 for Watts Bar and Chickamauga Dams, are shown in figures 1.2-3 and 1.2-4, respectively.

4. Thermal discharges to Chickamauga Reservoir - Until construction of the cooling towers is completed, TVA will operate the Sequoyah Nuclear Plant to meet the applicable temperature standards using the diffuser system for heat dispersion. As soon as the towers are operable, TVA will use the auxiliary cooling facilities to supplement the diffuser system to meet the applicable temperature standards.

Under the current schedule, commercial operation is expected to be June 1976 for unit 1 and February 1977 for unit 2.

The natural draft towers require approximately 40 months to design and construct and could be operational by November 1976. Thus, there would be approximately 5 months of interim operation involving only 1-unit operation. Since the interim period involves only 1-unit operation without cooling towers available, TVA expects to be able to meet applicable standards with only minor regulations of streamflows.

An analysis was made of the 6-year period 1966 through 1971 to determine if, under normal operating conditions of Chickamauga and Watts Bar Dams, a sufficient volume of water was available within a 24-hour period to provide the streamflow required to meet the present applicable thermal standards (5.4°F change and 86.9°F maximum). This analysis assumed 1-unit and 2-unit full-load operation of Sequoyah using only the diffuser system for heat dispersion (river cooling) and did not reflect the use of cooling towers. The mean daily releases and weekly tailrace temperatures that occurred at Chickamauga Dam during this period were used to represent conditions at the plant site. Although mean daily releases were used in the computations, it is recognized that operation of the Chickamauga and Watts Bar Dams for peaking power results in wide fluctuations within the daily period represented by the mean daily streamflows. There is no intent to indicate that these mean daily flows represent the instantaneous flows which occur at the site. However, the computations do show what the corresponding temperatures of the reservoir waters would have been if the releases had been uniform during the 24-hour period.

The TVA hydro system is operated primarily for three statutory purposes which, in order of priority, are: (1) flood control

(2) navigation (maintain navigation pool elevations in the mainstream reservoirs), and (3) hydro power generation. The operation of the reservoir system to meet these statutory uses is accomplished by two separate and distinct scheduling procedures. The first and primary scheduling operation is to identify the daily volume of water that must be released through each dam to meet the requirements of flood control and navigation within the limitations of the operating rule curves for the individual reservoirs. Once these daily "blocks" of water that must be released from each dam are determined, the generation needs of the power system determine what the hour-by-hour releases will be within the 24-hour period.

Thus, the evaluation using mean daily flow was to determine if the historic operation of the water control system had resulted in "blocks of water" to be released at Chickamauga Dam which would have been sufficient to meet the heat dissipation requirements at Sequoyah. On those days when total daily releases would not have been sufficient to meet the thermal criteria, additional supplemental releases would be required from upstream reservoirs or generation cut-backs at Sequoyah would have been necessary. However, examination of historical data shows that the necessary flow required for heat dissipation can frequently be maintained only by some rescheduling of the power operations of those TVA dams controlling the flows in Chickamauga Reservoir with a loss of some flexibility in establishment of their daily generation schedules.

If during the interim period prior to the cooling towers becoming operational, unacceptable regulation of the hydro system

could not be achieved, TVA is committed to reduce the output of the plant to meet applicable thermal criteria.

The number of days during the period 1966 to 1971 in which the present Tennessee temperature standards (5.4°F change and 86.9°F) maximum) would have been exceeded for three levels of mixing immediately downstream from the plant are summarized in Table 2.6-1. For 1-unit operation, the number of days during this period that the Tennessee thermal criteria would have been exceeded ranged from 155 days in a 6-year period (7.1 percent) for 60 percent mixing to 52 days in a 6-year period (2.4 percent) for 100 percent mixing. The corresponding values for 2-unit operation ranged from 674 days (30.8 percent) to 230 days (10.5 percent). For the range of mixing studied, the thermal change (rise) predominated as the critical thermal criterion. During those days when streamflows are insufficient to meet thermal standards, at least one of the following modifications of the actual operating schedule would have been required: (1) revision of the operation of Chickamauga or Watts Bar Dam, (2) an increase in the releases from upstream storage, (3) operation of the auxiliary cooling facilities, (4) reduction in the generation at Sequoyah Nuclear Plant, or (5) a combination of these operations. TVA anticipates that some modification of the peaking operation of Chickamauga and Watts Bar Dams will be required to reduce the occurrence of low or no flow at the project site. TVA will make such modifications, when practical, to enable the plant to utilize the heat dissipative capacity of the reservoir and at the same time to comply with the thermal standards. During the interim period between unit startup and the availability of auxiliary cooling facilities, special streamflow operation and/or

reduction in generation load could be used to ensure that the plant is operated within the limits of the thermal criteria. When the cooling towers become operational the need for special streamflow regulations and/or load reductions will not be as critical and the results presented for this 6-year analysis are indicative of the amount of cooling tower operation which will be required to comply with the 5.4°F/86.9°F standards.

The computed increases for the 6-year period with 100 percent mixing are shown in figures 2.6-3 and 2.6-4. The calculations presented in figure 2.6-4 assume complete mixing of the discharge water with the entire riverflow and therefore do not reflect the fact that some river water may pass by the diffusers without immediate mixing with the heated discharge. The complete mixing results presented in figure 2.6-4 represent the temperatures at some point downstream. Complete mixing will always occur at Chickamauga Dam. The calculations presented in figure 2.6-4 also assume continuous 2-unit full-load operation. The temperature variation which would occur during realistically varying unit operation would be less smooth than those shown in figure 2.6-4. However, the magnitudes of the river temperatures resulting from less than 2-unit full-load operation would always be less than those in figure 2.6-4. Appendix M contains a more detailed discussion of the thermohydrodynamics of the reservoir and the influence of the diffuser system during open and helper modes of operation.

5. <u>Effects on aquatic life resulting from diffuser discharges</u> -

(1) <u>TVA experience on effects of heated water</u> - Since 1955, TVA has been observing the distribution in streams

and in reservoirs of heated waters discharged from TVA's thermal-electric power plants (Table 2.6-2). TVA's experience indicates that warm condenser water under some conditions can be discharged into surface streams without significant adverse effects on aquatic life. The Paradise experience, although somewhat atypical of conditions in the Tennessee River due to the nature and small size of the Green River, demonstrates the value of monitoring programs in detecting adverse effects of thermal discharges at an early stage in plant operation. Initial operation of the Paradise Steam Plant on the Green River in Kentucky did produce significant adverse effects on aquatic life. In the first 5 miles below the plant, adverse effects were observed on bottom and suspended aquatic organisms. These effects were detected by environmental monitoring conducted by TVA and outside consultants. As a result of the initial findings of these biological studies, cooling towers were installed. Studies to assess thermal effects in the river are continuing.

(2) Possible impact of heated water on aquatic life - At the Sequoyah Nuclear Plant site the biota most directly affected by nuclear plant operation and heated water will be the plankton.

(a) Effects on biota passing through condensers - A skimmer wall is generally an effective barrier in reducing the number of large motile organisms entering the area of a pumping station embayment. At the Sequoyah site the skimmer wall is located at the edge of the original river channel. The wall extends below the overbank area approximately 25 feet to a point 9-1/2 feet

above the bottom of the original channel. This depth is far below the zone of normal phytoplankton production (the bottom of the wall is over 41 feet below normal pool level). Zooplankton will be most affected during their daily descent and depth maintenance through the daylight hours. The velocity of flow under the wall in open and helper modes is 0.5 foot per second for 2-unit operation and 0.25 foot per second for 1-unit operation (both low enough to permit escape by juvenile and adult fish or many macroinvertebrates). The relationship of the bottom of the wall to the overbank area and the low velocities under the wall may be a barrier to organisms.

Estimated velocities at four locations in the intake system under full plant load conditions are: (1) 0.5 ft/s under the skimmer wall, (2) 2.7 ft/s in the intake channel, (3) 1.2 ft/s in the intake bays, and (4) 2.2 ft/s through the 3/8-inch-square mesh traveling screens.

River channel velocities average 0.6 foot per second under normal winter flow conditions and 0.3 foot per second under normal summer flow conditions. The velocities under the skimmer wall approximate these channel velocities. Phytoplankton, zooplankton, and larval fish which pass under the skimmer wall will be entrained in the condenser flow. A reduction of intake velocities would not prevent plankton or larval fish from passing through the condenser cooling water system.

Since larval fish sampling has only recently begun on Chickamauga, the calculations used are taken from the sampling conducted on Wheeler Reservoir. Two stations at Wheeler

Reservoir were sampled once a week for the period April 27 to July 27 in 1971. At each station two duplicate meter-net tows were taken in each of three areas; near shore in shallow water, on the surface in the former river channel area (deep water), and from a depth of 5 meters in the channel area. Each station was sampled both day and night in 1971. Corresponding dates, stations, and areas were also sampled in 1972 although only night tows were taken.

Wheeler data taken from 5-meter depths in the channel areas were analyzed and integrated over the time period April 27 to July 27 to correspond to the Chickamauga Reservoir situation. This yielded a value of 88.77 larval fish/m^3/91 days. When applied to Chickamauga Reservoir, this calculation was reduced by 2/3 to account for the differences in fish standing crops of the two reservoirs.

At full 2-unit operation with once-through cooling, (either open or helper mode) the Sequoyah plant is expected to withdraw 6,125,000 cubic meters of water each day for condenser cooling. Multiplied by the 29.59 larval fish/m^3/91 days the condenser passage of larval fish is calculated at 181 million during the 91-day period. Recent sampling in Chickamauga Reservoir has indicated that larval fish are present before April 27; therefore, the calculated value may be underestimated.

The mortality of entrained larval fish will be about 100 percent because of the high Δt, mechanical damage, and the long retention time.

The 29.5^{o}F thermal rise in the condensers and mechanical damage will be lethal to nearly all plankton.

Plankton killed by passage through a steam plant condenser may still provide food for fish, bottom fauna, and/or zooplankton. However, observations at the Paradise Steam Plant indicate that algal losses in summer and fall due to heat are replaced by rapid growth and reproduction in the downstream heated surface plume that remains quite warm for 5 to 10 miles.

The percent of plankton organisms that will be entrained cannot be accurately estimated. The flow through the condenser at full plant load in open and helper modes is 7 percent of the mean annual flow. The extent to which the number of organisms entrained is correlated with the volume of flow is not known but may be considered proportional to the total flow, especially with respect to zooplankton.

Velocities under the skimmer wall and in the intake channel will be reduced by 50 percent during 1-unit operation, while velocities at intake bays and through traveling screens will not change. Reduction in volume of water passing under the wall will result in some reduction in numbers of organisms entrained. Reductions will probably be in proportion to intake volume.

(b) <u>Effects on fish in receiving waters</u> - Larval fish entrained in the jet mixing zone may encounter a 16°C (29.5°F) rise in the jet mixing zone. Assuming a net downstream velocity of 0.5 to 1.0 ft/sec in the jet mixing zone, the duration of exposure will be a few seconds. Within 30 feet of the diffusers (maximum of 1 minute) the temperature will have dropped to less than 5°C above ambient and within 200 feet (7 minutes) the rise will be a maximum of 3°C. The effects of this passage on entrained larval fish are unknown.

Organisms entrained in the diffuser discharges will increase respiration rates and other metabolic activities in response to the elevated temperatures. Since the duration of exposure to temperatures exceeding 3°C will be relatively short and the area affected is relatively small, it is expected that only an increased respiration rate will be evident. Organisms living in areas below the plant and subjected to increases in temperature will probably exhibit Q_{10} effects when the plant begins operation. After acclimation, however, no significant effects on downstream biota are expected.

At a distance of about 2 miles below the plant, the mixed water will have spread over the full width of the reservoir. A maximum increase of 3°C in the water temperature of the overbank area below the plant could occur under some conditions. Spawning times and egg development rates under these conditions may be slightly affected. These effects, however, cannot be separated from normal climatic variations.

There probably will be subtle shifts in the abundances of various species in the areas below the plant. Warm water species should increase in numbers. The population of spotted bass, the only cool water species which appears to be concentrated near the plant, may numerically decrease in the heated areas, probably as result of relocation. There is, however, no reason to expect a reduction in the size of the spotted bass population in the reservoir.

Another predicted effect is a slight increase in the productivity of the reservoir, particularly in the area below the plant. It is generally known that reservoir productivity

is associated with the thermal regime. Higher standing crops of fish and faster turnover rates are expected in warmer waters. The magnitude of the increase and the effect on the individual species in Chickamauga Reservoir is unknown.

No barrier to migration is expected because the left side of the channel near the diffusers will not be thermally influenced and in areas below the plant the mixed (less than 3°C) water will usually be at or near the surface. Of particular importance, walleye and sauger will probably migrate to the Watts Bar tailwater and the Hiwassee River in fall and winter to spawn. Both species are thought to occupy deep water and should have difficulty getting by the plant, if, in fact, they exhibit avoidance of heated water. Both species congregate in heated water areas in winter. This discussion presumes fish encountering a 3°C gradient will respond to it.

Planned shutdown of the plant will be gradual and should minimize thermal shock and the possibility of fish kills. Unanticipated shutdown could result in a fish kill due to disappearance of the thermal plume. While such an event would be visible locally, no significant impact to the reservoir fish population would result.

(3) Implications of withdrawal and return of cooling water - The two units and auxiliaries at Sequoyah will require the withdrawal and return of approximately 1,122,000 gallons of water per minute when operating in open and helper modes.

(a) Nutrient circulation - Destruction of plankton in the condensers will release nutrients that could result in the growth of heterotrophic slimes. No significant adverse

effects on important species populations are anticipated. However, should such effects occur, they would be detected by monitoring programs.

(b) Reduction of DO concentrations in the condensers - Since warm water can hold less oxygen in solution than cooler water, the theoretical effects of elevation of water temperatures some 29.5°F in passing through the condensers has been considered. For example, the oxygen saturation concentration[2] in water at 81.5°F is 8.0 milligrams per liter, whereas at 111.0°F the saturation concentration i. 6.2 milligrams per liter.

Observations of DO concentrations in Chickamauga Reservoir above and below the Sequoyah site indicate that in the summer months DO concentrations are not at saturation but in the range of 75 to 80 percent of saturation. Thus, instead of 8.0 milligrams per liter of DO in water at 81.5°F, the actual concentration is observed to be approximately 6 milligrams per liter. During the warmer months of the year, even after the temperature is elevated 29.5°F in passing through the condenser, DO saturation concentrations are not apt to be exceeded. The dissolved oxygen concentrations observed at a sampling point near the plant site are shown in Table 1.2-11.

Another factor tending to reduce DO concentrations in water passing through a condenser is the partial vacuum existing at the discharge end of the condenser. This partial vacuum occurs because the discharge end of the condenser lies above the hydraulic gradient. This situation is common to all steam plants. While vacuum pumps are installed to remove any accumulated gases, experience has shown that very little gas accumulates and needs to be removed from the system.

No adverse effects on the DO concentrations of the condenser cooling water due to temperature or pressure effects are anticipated, since no significant quantity of oxygen will be driven off.

(c) Effect of entrainment on dissolved oxygen - Essentially all plankton and fish larvae passing through the plant cooling water system will be killed. The organic waste load resulting will tend to depress concentrations of dissolved oxygen (DO) in the reservoir water downstream from the plant. The organic waste load resulting from the entrainment of phytoplankton and zooplankton was determined using the maximum concentrations of phytoplankton and zooplankton observed to occur in the vicinity of the Sequoyah plant water intake during the period of preoperational biological monitoring. The maximum fish larvae concentrations observed at the intake of Browns Ferry Nuclear Plant were used as an estimate of the fish larvae concentrations at Sequoyah. To estimate the maximum oxygen depression resulting from the entrainment load, the maximum phytoplankton, zooplankton, and fish larvae loads were assumed to occur simultaneously. Furthermore, it was assumed that this simultaneous occurrence coincided with a period of time when the cooling water from both generating units in the plant was being discharged through the diffusers while operating in the open mode. It was also assumed that the total riverflow was 13,700 ft^3/s (minimum streamflow for 2-unit operation with 100 percent mixing), and that a 5.4° rise, from 81.5°F to 86.9°F was produced in the entire flow of the Tennessee River.

Based on the low streamflows, it was assumed that the organic load would exert its ultimate biochemical

oxygen demand in the lower end of the Chickamauga Reservoir. In these calculations it was further assumed that no reaeration or reoxygenation of the water would take place in the reservoir either through surface absorption of oxygen or by photosynthesis.

Based on all of these very conservative assumptions--each of which tends to maximize the calculated DO depression--the depression in concentration of dissolved oxygen was calculated to be about 0.5 milligram per liter. The actual DO depression resulting from discharge of the entrained organic load is expected to be much less.

(d) Effect of elevated stream temperatures on stream purification factors - Many of the factors involved in the self-purification of streams are affected by changes in water temperature which in turn will affect the capacity of the stream to assimilate organic waste discharges. The principal individual factors involved in this phenomenon, which are temperature sensitive, are: DO saturation, deoxygenation rate (K_1), reaeration rate (K_2), and ultimate BOD (La). Since each of these factors are dependent upon the physical-chemical characteristics of the stream water and the specific waste discharge in conjunction with the hydraulics and geometry of the stream reach, it is not possible to identify specific changes in absolute values that will occur as a result of the elevated water temperatures. However, using standard engineering equations,[3] it is possible to determine the relative impact of the maximum expected thermal increases (81.5°F to 86.9°F) as follows: DO saturation value (-5.6 percent); deoxygenation rate (+14.7 percent); reaeration rate (+5.6 percent); and ultimate BOD (+5.2 percent).

To provide an estimate of the quantitative effect of these changes on the DO resource, an evaluation was made to determine the overall effects of the elevated stream temperatures on the assimilative capacity of the Tennessee River down stream from Chattanooga (Nickajack Reservoir). This evaluation was based on the Streeter-Phelps equation using conservative assumptions for the stream constants (high deoxygenation rate and low reaeration rate). The streamflow used in this evaluation was assumed to be the minimum flow (13,700 ft^3/s) required to meet the Tennessee temperature criteria (5.4°F change and 86.9°F maximum) with both units at Sequoyah operating at full load. The added organic load used in the evaluation was 25,000 lbs. per day of 5-day 20°C BOD, which is similar to the present total organic load discharged to the surface streams in the metropolitan Chattanooga area. The results of this evaluation show that the overall effects of the maximum elevated stream temperatures would reduce the DO concentration at the low point of the DO sag by about 0.3 mg/l.

(e) Combined effects of the elevated stream temperatures on the dissolved oxygen resource - Based on the previous calculations, the maximum combined effect of the elevated stream temperatures would be to depress the DO concentration downstream from Chattanooga by about 0.8 mg/l (0.5 mg/l from entrainment load and 0.3 mg/l from Chattanooga load). This assumes that the maximum impact evaluated for entrainment would occur in Nickajack Reservoir simultaneously and at the same location as the maximum evaluated impact on the stream assimilative capacity.

In summary, the increased water temperatures resulting from the operation of the Sequoyah Nuclear Plant

will have a slight impact on the dissolved oxygen resource of the Tennessee River downstream from the plant. However, because of the very conservative assumptions used in the evaluations, the actual impact that would be expected would be much less than the values indicated. It is anticipated that neither the maximum evaluated impact nor the expected actual impact on the DO resource would adversely affect aquatic populations in the river.

(4) Potential hazards to fish of cooling water intake - The cooling water intake structure will have plan dimensions 136 feet by 79 feet, with a total height of 58 feet (from elevation 647 to 705 feet above mean sea level). A skimmer wall extending well below the water surface will be installed at the entrance to the pumping station intake channel. This should reduce the intake of plankton or fish larvae into the channel. Small meshed traveling screens (3/8-inch square openings between wires) are provided at the intake pumping station so that larger fish will not be entrapped and carried into the plant auxiliary water system. The traveling screen consists of a number of screen sections, fastened top to bottom, to form an endless belt of screens. The water velocity approaching the screens is about 2 feet per second. Material collected on the traveling screens will be leaves, twigs, and other small debris blown into the pumping station embayment by the wind. The skimmer wall will probably prevent debris in the reservoir from entering the embayment.

(5) The condenser discharge pond - The 32 acres included in the discharge pond constitutes a net loss of aquatic habitat (see Appendix B). Some primary and perhaps secondary production will be exhibited in this area following reflooding and subsequent plant operation.

6. Natural draft cooling towers - TVA has reexamined the alternative heat dissipation facilities which were outlined in the Sequoyah draft environmental statement and has concluded that the installation of natural draft cooling towers with open-helper-closed system capability is the best alternative to meet the more stringent thermal standards. The principal advantages for natural draft towers over other auxiliary cooling facilities are the lower potential for fogging and icing, lower operation and maintenance costs, and lower noise levels. The disadvantages include higher capital expenditures and the nearly 2-year longer lead time for construction. Of these considerations, the principal one which determined the use of natural draft towers was the lower potential for fogging and icing. The mechanical draft towers operating in the helper and closed modes are predicted to create or intensify fogs, which could affect ground transportation 123 hours a year and water transportation 306 hours a year. The elevated plumes from the natural draft towers seldom, if ever, reach ground level and cause localized surface fogging.

The combined-cycle system using the heat dissipation capacity of the reservoir has a considerable economic advantage over a closed-cycle system as presented in Section 2.6-9, Alternative Heat Dissipation Methods. The combined-cycle system can be operated in the open, helper, or closed modes.

In the helper mode the temperature of the heated water after leaving the condenser will be reduced by passing it through the cooling tower system before it is discharged through the diffusers. In both the helper and closed modes the condenser flow and temperature rise

will be about 1,250 ft^3/s and 29.5°F for each unit; however, the temperature of the water leaving the towers will depend on the wet bulb temperature, which is highly variable, and the tower design, which is not complete.

Based upon an analysis of the natural water temperatures and flow data from 1966 to 1971 and meeting an allowable 5.4°F rise with a maximum temperature of 86.9°F, it is estimated that Sequoyah will be operated about 80 percent in the open, 16 percent in the helper, and 4 percent in the closed mode. This is also based on 2-unit operation with each unit in the same mode at the same time.

(1) Physical and chemical characteristics of tower effluent - Water necessary for continuous operation of the cooling system in the closed mode would be obtained from the Tennessee River at the plant site. This quantity of makeup would be dependent upon the following items: (1) amount of blowdown necessary to control the total dissolved solids, within the condenser cooling system, (2) the amount of evaporation from the tower, and (3) drift losses. With a blowdown concentration factor of 2, the total makeup required would be approximately 6 percent of the circulating flow, or 147 ft^3/s.

During closed-mode operation a certain portion of the water in any closed-cycle system must be removed. This blowdown prevents the concentration of impurities in the water which would otherwise interfere with operation. The amount of blowdown is estimated to be about 70 ft^3/s and will be dependent on the amount of evaporation, the dissolved solids presently contained in the source river water, and the effluent standards imposed. Radioactive and

chemical releases associated with the blowdown discharge are discussed in sections 2.4 and 2.5. The dissolved solids in the river for 1960-61 averaged approximately 91 mg/l with a maximum of 128 mg/l. With a concentration factor of 2, the blowdown itself would meet applicable standards. Slightly increasing the quantity of blowdown would further reduce the dissolved solids concentrations. The temperature of this blowdown water would be approximately 65° and 72°F under average winter conditions, 74° and 80°F under average fall and spring conditions, and 84° and 90°F under average summer conditions for the closed system and combined system with closed capability, respectively. Peak summer conditions can produce temperatures near 96°F.

At present it is planned to discharge the blowdown through one of the large diffuser pipes. If actual operation indicates that this procedure will not result in sufficient mixing to meet the standards applicable to the discharge, a separate diffuser system will be constructed for discharge of the blowdown.

Drift, which is water that is blown out of the tower, has been estimated by the cooling tower manufacturers to involve quantities of about .01 percent of the circulating water flow, or 0.25 ft^3/s. Careful placement of the towers should minimize the localized effect of drift.

(2) Local fogging and icing - Potential environmental effects from natural draft cooling tower operation at the Sequoyah Nuclear Plant may include some modification of the local environment by increased frequency of fog formation, increased fog density, reduced visibility, increased precipitation, alteration of ambient moisture

content, and icing on nearby surfaces when temperatures are below freezing. No fogging effects from the natural draft tower operation are expected to reach Chattanooga proper.

Local atmospheric conditions indicate that dense, naturally occurring fogs (visibility equal to or less than 1/4 mile) can be expected about 35 days per year in the vicinity of the Sequoyah Nuclear Plant.

Fogs occurring in the Sequoyah area are mainly radiation and radiation-advection types resulting primarily from nocturnal cooling and subsequent saturation of the air within the lower few hundred feet of the surface. These fogs normally occur during late evening through midmorning hours when weak winds and optimum radiational cooling conditions prevail. On a seasonal basis, heavy natural fogs occur in the Sequoyah area with the highest frequency during late summer through early winter and the lowest frequency during late winter through midsummer.

Evaluations of the potential environmental effects from operation of the mechanical draft and natural draft towers and spray canals were based partly on field observations from August 1, 1970, through December 31, 1972, at the TVA Paradise Steam Plant in Kentucky. During this period one or more of the three natural draft towers at the Paradise plant were in operation on 205 days encompassing all seasons of the year. Observations were made by a meteorologist usually between 0730 and 0900 hours local time. These observations were augmented by data from the Paradise meteorological station and the National Weather Service Upper Air Section (rawinsonde) in Nashville.

Since the length of the visible vapor plumes depends primarily on the moisture content of the ambient air, observed plume lengths at the Paradise Steam Plant were correlated with the specific humidity deficit determined from the mean ambient dry-bulb and dew-point temperatures of the layer of air in which the plume was observed. Specific humidity deficit is defined as the amount of moisture a parcel of air can contain at saturation for a specific dry-bulb temperature, minus the actual amount of moisture present. The observed plume lengths and humidity deficits were fitted by least squares to obtain an expression to estimate plume lengths.

The specific humidity deficit was determined from the 0600 local time Nashville rawinsonde data for the 400- to 2,000-foot vertical layer and correlated with corresponding mean wind directions to identify the mean meteorological conditions applicable for natural draft tower operation. This information was used to estimate plume lengths and directions for natural draft towers. Relative to mechanical draft towers the specific humidity deficit was determined for the 300-foot level by using the Nashville rawinsonde data and the dry-bulb temperature for the same level from the Sequoyah meteorological station. This information was correlated to the corresponding mean wind direction data obtained at the Sequoyah meteorological station and used to estimate plume lengths and directions for mechanical draft towers. Dry-bulb temperature, dew-point temperature, and wind direction data obtained at the near-surface level from the Sequoyah meteorological station were used for evaluation of the environmental effects of the spray canals.

Since the generating capacity of the Sequoyah Nuclear Plant is larger than that of the Paradise Steam Plant and because of the lower thermal efficiency of a nuclear plant compared to a coal-fired plant, more moisture will be evaporated into the atmosphere at Sequoyah; therefore, it is necessary to adjust the observed Paradise evaporation rates upward. This adjustment of observations resulted in longer vapor plume estimates for the Sequoyah Nuclear Plant heat dissipation alternatives.

This data analysis was used to construct radial graphs illustrating directional frequency, by compass sector, of the expected plume lengths during the early morning hours, 0600-0900 local time, the time of day when the maximum plume lengths are expected. Two graphs were prepared for each heat dissipation alternative--one for all days regardless of the early morning average ambient temperature and one for those days when the 0600-0900 average ambient temperature was below freezing. The plume length data from which the graphs were drawn were separated by direction into the sixteen 22-1/2-degree compass point sectors. Radial distances on the graphs represent plume lengths up to 5 miles; numbers on the lines dividing the compass sectors depict percentages of days (based on 365 days per year) when sometime during the period, 0600-0900 local time, the vapor plume will be equal to or greater than the indicated length. It is emphasized that these numbers represent the percentage of days the plume lengths could reach these distances and do not indicate necessarily whether or not the vapor plume would exist at ground level for a particular heat dissipation alternative. These radial graphs were overlayed on a scaled map showing the highways, population centers, and the terrain elevations for the Sequoyah area.

Observations of the natural draft tower plumes at the TVA Paradise Steam Plant indicate that with the average plume rise ranging from 500 to 1,000 feet above the cooling towers, the visible portion of the elevated plumes seldom, if ever, reaches ground level and causes localized surface fogging. The radial graph illustrating directional frequency of expected plume lengths, figure 2.6-5, indicates that a majority of the plumes will occur in the east-southeast through south sectors. The approximate population of this area is 1,775. There may be a fogging potential associated with the roadways in this area. The plume could be over Tennessee State Highway 58, which traverses the east through south sectors, as often as 1 percent of the days (about 4 days per year) in the south sector. The 1972 average daily traffic in this vicinity was 6,430 vehicles. County Highway 5550 with an average daily traffic count of 2,270 could be reached by the elevated vapor plumes as often as 3 percent of the days (about 11 days per year) in the south-southeast sector. However, vapor plumes of length sufficient to reach Harrison Bay State Park in the south-southwest sector should occur only 0.5 percent of the days (about 2 days per year).

Review of the daily early morning temperatures indicated that freezing temperatures would normally be expected about 70 days during the 5-month period, November through March, with the highest frequency in January and February. As indicated by figure 2.6-6, the majority of the cooling tower plumes at times when the early morning ambient temperature is below freezing occur in the south-southeast and south sectors where the approximate population is 1,030. State Highway 58 in the south sector could have potential icing conditions about 0.8 percent of the days (about 3 days per year) while County Highway 5550 could experience potential

icing as often as 2 percent of the days (about 8 days per year) in both the south-southeast and south sectors.

(3) Aesthetics - The hyperbolic form and concrete materials are compatible with the architecture of the main plant and would not require any special aesthetic treatment.

The natural draft cooling towers would most certainly become a landmark on the surrounding terrain. The extensive plumes would increase this effect.

(4) Noise - Based on TVA's experience with the three natural draft towers installed at its Paradise Steam Plant, only slight increases in noise levels at the site boundary are expected when natural draft towers are installed.

7. Operating procedure following tower installation - The cooling towers will be designed and sized according to the 5.4°F temperature rise and 86.9°F maximum temperature standards as approved by EPA on June 9, 1972. TVA expects that after the installation of the towers is complete both generating units will usually be operated in the same mode at the same time. During the time when only limited supplemental cooling is required, one unit may be operated in the helper mode. With the units operating in the open mode (river cooling only), the normal procedure would be to change to the helper mode and then to the closed mode as required to meet the thermal standards. As the temperature standards permit, the units would be changed to the helper mode and then to the open mode.

TVA estimates the cooling tower operation will be required about 20 percent of the time to supplement the diffuser system in meeting the 5.4°F rise and 86.9°F thermal standards.

Table 2.6-1 shows the number of days and the percent of days during the period 1966-71 that the 5.4°F rise and 86.9°F maximum

temperature criteria would not have been met for each of three mixing criteria utilizing the diffuser system only. The data in this table are indicative of the amount of time that operation of the cooling towers will be required to meet the 5.4°F rise and 86.9°F maximum standards.

TVA will, as far as practicable, use the heat dissipation capacity of the river. The extensive thermal monitoring network installed for the Sequoyah plant will be utilized to assure that the thermal standards are met. The monitor network will permit a rapid determination of impending violations of thermal standards and enable TVA to make operational changes on a timely basis to meet the standards. These operational changes could include: (1) adjustments to the scheduled releases at Chickamauga and Watts Bar Dams, (2) use of the auxiliary cooling facilities at Sequoyah, and (3) reductions in the generation from Sequoyah should auxiliary cooling facilities be unavailable.

8. Applicability of Section 401 Certification Requirement permit - Under the provisions of Subsection 401(a)(6) of the Federal Water Pollution Control Act Amendments of 1972 (Public Law 92-500), TVA as a Federal agency is not required to obtain the certificate of compliance with applicable state water quality standards required by Section 401(a) of that Act. TVA is, however, obligated by Section 313 to meet all state water quality requirements and is subject to Executive Order 11507, "Prevention, Control, and Abatement of Air and Water Pollution at Federal Facilities" and to obtain a Section 402 NPDES Permit.

9. Alternative heat dissipation methods - The following discussion describes the alternative heat dissipation methods and facilities considered by TVA. The methods investigated were: dry cooling towers, mechanical draft cooling towers (wet), natural draft cooling towers (wet), spray canal system, and cooling lake system. TVA

and suppliers have adequate data on mechanical draft cooling towers, natural draft cooling towers, and spray canals, and a complete analysis of these cooling systems has been made. Preliminary investigations of the geography of the area indicates that the cooling lake alternative would not be feasible.

Analyses were performed using the following factors as a basis: feasibility, environmental considerations, economic considerations, land requirements, and construction schedule. In order not to preclude these alternatives, TVA has made design studies of the necessary changes in the design and construction of the cooling system to permit heat dissipation equipment to be installed with a minimum loss of plant operation time.

(1) Dry cooling towers - The use of dry cooling towers for power plants is a relatively recent development in the United States. The largest unit in the United States employing this type of cooling is less than 50 MW. While European units have used dry cooling towers for years, the largest such unit is believed to be less than 250 MW in size.[4]

Dry cooling tower systems for use in heat dissipation for power plants are today being discussed more and more because of the potential environmental advantages this method has over the once-through and the evaporative (wet) or conventional cooling systems. The dry system requires almost no consumptive use of water, and since there is no evaporation of water, there are no vapor plumes, no drift, and therefore no fogging and icing. Losses to the aquatic life from impingement and entrainment are limited to the initial filling

of the system and to the occasional replacement for leaks and other losses. There is no cooling tower blowdown, and thermal discharges to surface waters are not required. On the other hand, systems using dry cooling towers are inherently less efficient and require larger irretrievable commitments of fuel resources.

Both mechanical draft and natural draft towers can be used in the dry system to reject the heat to the ambient air by convection rather than evaporation. This is an inherently less efficient process and requires an extensive heat transfer surface area of metal fin tubing within the tower, which could be either mechanical or natural draft. In this system the temperature of the water leaving the tower can only approach the dry-bulb temperature of air which is invariably higher than the wet-bulb temperature approached by the wet towers.

Because of the high circulating water temperatures, expensive supplemental cooling must be provided for plant auxiliaries.[4] Dry cooling systems dictate severe performance requirements on the turbines which may have to operate over a wide range of backpressures with a maximum of from 10 to 14 inches Hg Absolute compared to a maximum backpressure of conventionally cooled plants of about 5 inches of Hg Absolute.[4,5]

Turbine manufacturers have recently indicated it should be feasible to develop 700- to 800-MW turbines with backpressures as high as 15 inches Hg Absolute for delivery by 1976. There are, however, substantial associated problems which would have to be resolved before these turbines can be made available. In a

June 28, 1971, marketing information letter the General Electric Company stated:

> Our studies show that there are substantial turbine design challenges associated with the higher than normal exhaust pressure of dry cooling tower applications. These include: possible overheating of the last-stage bucket; possible flutter damage to the last-stage bucket at high exhaust pressures and low loads; possible water damage due to recirculation from the direct condenser; rapid exhaust temperature changes due to load changes which cause cycling thermal stresses; distortion of the exhaust hood and bearing supports; and difficulties in providing adequate clearance control.

Regarding turbines of the size required for large units as are to be installed at Sequoyah, the General Electric letter said, "We believe it is premature to speculate on the cost or earliest shipment of any nuclear turbine design suitable for operation at exhaust pressures up to 15 inches Hg Absolute."

In a followup letter of November 29, 1971, General Electric offered a turbine for fossil reheat application suitable for operation at exhaust pressures up to 15 inches Hg Absolute. The maximum rating for a 4-flow turbine-generator of this design is approximately 750,000 kW. General Electric announced that they were proceeding with the design and development of this new turbine in order to support shipment by early 1976.

A report, Plant Design Alternatives for Controlling Thermal Discharge, Chemical Effluents, and Intake Entrapment, which was prepared by Sargent and Lundy Engineers and presented at the Atomic Industrial Forum Seminar, January 23, 1973, stated regarding dry towers:

> Dry towers are not feasible on large nuclear units at the present time for many reasons. These include engineering problems, condenser problems, lack of experience, and unfavorable economics.

Indications are that progress is being made in the area of power plant design for dry tower application and that more serious consideration will be given in the future to such towers. However, at present TVA believes that dry cooling towers are not a viable alternative heat dissipation method for nuclear units of the size to be installed at Sequoyah.

(2) Alternative modes of operation - TVA has examined the applicability of two alternative types of systems.

(a) Closed cycle systems - The auxiliary cooling facilities can be designed and constructed so that the only water discharged to Chickamauga Reservoir would be the required blowdown from the cooling system. This system would not have the flexibility to use the heat dissipation capacity of the reservoir. Figure 2.6-7 shows the schematic arrangement for the closed system.

(b) Combined-cycle system - All types of heat dissipation equipment can be used in combined-cycle systems. Two types of combined-cycle systems are considered.

1. Open-helper mode combined-cycle system - This type of combined-cycle system may be operated in either the open mode, in which the river water is pumped through the condensers and is discharged into the river through the diffuser system, or in the helper mode, in which the river water is pumped through the condensers and the heat dissipation equipment and then is discharged into the river through the diffuser system.
2. Open-helper-closed mode combined-cycle system - This type of combined-cycle system may be operated not only in either the open or helper mode but also in the closed mode.

Expanded studies outlining detailed day-to-day plant operation indicate that for a significant amount of time an unfavorable relationship exists between the inlet water temperature and the wet bulb temperatures with the result that cooling facilities operating only in the helper mode would not always provide sufficient cooling to enable the plant to meet existing thermal standards. Thus, relatively large reductions in the plant output could be required to meet thermal standards if only helper-mode capability were provided. TVA no longer considers the open-helper mode of combined-cycle operation as a feasible alternative for this project.

Figure 2.6-8 shows the schematic arrangement and operation of the gates in the cooling water circuit necessary to accomplish the open-helper-closed mode of combined-cycle operation. This scheme provides flexibility for using the Chickamauga Reservoir for heat dissipation to the extent desirable.

(c) Percent of time on various modes - Calculated maximum water temperature of the outlet does not normally exceed the following values in degrees F:

Alternative Heat Dissipation Method	Closed System	Combined Open-Helper-Closed
Mechanical draft	89	93
Natural draft	91	96
Spray canal	93	94

River flow would be required for mixing at the diffuser outlet with discharge water with the plant on open-cycle mode to meet the 3°C temperature rise requirement. The operating time required in these modes is estimated as follows:

Alternative Heat Dissipation Method	Combined System	Percent of Year		
		Open	Helper	Closed
Mechanical draft	Open-helper-closed	79.7	17.2	3.1
Natural draft	Open-helper-closed	79.7	16.2	4.1
Spray canal	Open-helper-closed	79.7	17.5	2.8

The above schemes are based upon operating both units in the same mode at all times with riverflow availability as defined by 10-year flow duration records.

(3) Mechanical draft cooling towers - The use of crossflow mechanical draft cooling towers as an alternate cooling method would require four cooling towers, each 56 feet wide by 60 feet high by 722 feet long for the closed system and 50 feet wide by 60 feet high by 650 feet long for the open-helper-closed combined system.

The present intake and discharge systems would be modified to permit the use of towers, with makeup and blowdown provisions. A new booster pumping station would be required to lift the circulating water to cooling towers. The water would be broken into drops by falling through lattice-like fill. Heat from the drops is transferred to the airflow which is induced by large fans. The water returning from the towers would flow by gravity back to either the discharge pond (helper mode) or to the intake structure (closed cycle) where the circulating pumps would then transport it through the plant condensers.

(a) Feasibility - Mechanical draft cooling towers are suitable for application to the Sequoyah Nuclear Plant. Figures 2.6-9 and 2.6-10 show a possible location and arrangement

of the four mechanical draft towers on the plant site for the closed system, and the combined system with open-helper-closed capability, respectively.

(b) Environmental considerations

Physical and chemical characteristics of tower effluent - Water necessary for continuous operation of the closed cycle would be obtained from the Tennessee River at the plant site. This quantity of makeup would be dependent upon the following items: (1) amount of blowdown necessary to control the total dissolved solids within the condenser cooling system, (2) the amount of evaporation from the tower, and (3) drift losses. With a blowdown concentration factor of 2, the total makeup required would be approximately 6 percent of the circulating flow, or 147 ft^3/s.

During closed-mode operation a certain portion of the water in any closed-cycle system must be removed. This blowdown prevents the concentration of impurities in the water which would otherwise interfere with operation. The amount of blowdown is estimated to be about 70 ft^3/s and will be dependent on the amount of evaporation, the dissolved solids presently contained in the source river water, and the effluent standards imposed. The dissolved solids in the river for 1960-61 averaged approximately 91 mg/l with a peak of 128 mg/l. With a concentration factor of 2, the blowdown would meet applicable standards. Slightly increasing the quantity of blowdown would further reduce the dissolved solids concentration. The temperature of this blowdown water would be approximately 70° and $75^\circ F$ under average fall and spring conditions, and 83° and $88^\circ F$ under average summer conditions for the closed system and combined system with closed capability,

respectively. Peak summer conditions can produce temperatures near 89°F for the closed system and 93°F for the combined system with closed capability. However, blowdown could be withheld under peak temperature conditions provided they do not last more than about 2 days. A mixing device would be required to meet present thermal standards for this small quantity of water.

Drift, which is water that is blown out of the tower, has been estimated by the cooling tower manufacturers to involve quantities of about 0.03 to 0.2 percent of the circulating water flow, or 0.4 to 4.9 m^3/s. Careful placement of the towers should minimize the localized effect of drift.

Local fogging and icing - Atmospheric effects from the operation of the mechanical draft towers at the Sequoyah Nuclear Plant would include considerable fogging and possibly some icing within 5 miles of the cooling towers. The potential effects will be more significant than those from the higher plumes of the natural draft towers because of their lower emission height. In some cases the visible plumes from the mechanical draft towers should move downwind at near ground level. Of particular interest would be the intensifying effects of these low-level plumes during periods of heavy natural fog. These natural fogging conditions would be expected to occur about 35 days per year with most fogging between 0300 and 0800 local time. In addition, mechanical draft tower induced fogging would most probably occur north through northeast and south-southeast through southeast of the plant--the sectors with the highest frequency of plume occurrence. Figure 2.6-11 indicates that

from 4-7 percent of the days (15-26 days per year) the plume would extend 1 mile or more in one of these sectors. County Highway 5550 with an average daily traffic count of 2,270 could be reached by the vapor plumes as often as 5 percent of the days (18 days per year) in the south-southeast sector, 5-7 percent of the days (18-26 days per year) in the south sector, and 5-7 percent of the days (18-26 days per year) in the south-southwest sector. The plume could affect County Highway 4306, which traverses the west-southwest through northwest sectors, with an average daily traffic count of 1,130, as often as 2 percent of the days (7 days per year) in the west-southwest sector. The plume could reach Tennessee State Highway 58, which traverses the east through south sectors, as often as 1 percent of the days (about 4 days per year) in the south-southeast sector. The 1972 average daily traffic in this vicinity was 6,430 vehicles. Vapor plumes of length sufficient to reach Harrison Bay State Park in the south-southwest sector should occur about 2 percent of the days (7 days per year).

Periods of potential mechanical draft tower induced icing when the ambient early morning temperature is below freezing are expected about 70 days per year during the 5-month period, November through March, with the highest frequency in January and February. Duration of heaviest icing would depend on the persistency of the below-freezing temperatures. Most severe conditions are expected between midnight and 0700 local time. Figure 2.6-12 indicates that icing could occur on County Highway 5550 as often as 3 percent of the days (11 days per year) in the south-southwest sector, 1 percent of the days (4 days per year) in the south sector, and 0.5 percent of the days (2 days per year) in the south-southeast sector. Also, icing could occur in Harrison Bay State Park about 2 percent of the days (7 days per year).

(c) Aesthetics - The materials of mechanical towers are not compatible with the architecture of the powerhouse; therefore, design features would be incorporated to achieve architectural compatibility with the main plant. The relatively low profile of the mechanical draft towers would not present a very large vertical barrier or landmark on the terrain. While the towers viewed from their end permit intermittent horizontal views of the landscape, when viewed from their side they present a horizontal barrier of several hundred feet. The physical characteristics of the site and the existing plant arrangement require that the towers be located near the shoreline. This would require special site treatment to relate the towers to the main plant area and prevent destroying the natural characteristics of the shoreline.

(d) Noise - The use of mechanical draft cooling towers would increase noise levels at the plant site by a small increment. This increase would be due to: (1) the fans, and (2) the falling water. Predicted sound pressure levels from one major manufacturer of cooling towers are 76 db at 250 Hz, 63 db at 2,000 Hz, and 59 db at 8,000 Hz--all 50 feet from the louvered face (re 0.0002 microbar).

(e) Economic considerations -

Initial investment - The initial investment required to install this alternative is estimated to be 39.4 million dollars for the closed system and 35.3 million dollars for the combined system with open-helper-closed capability.

Capability - Any substitution of a heat dissipation device produces a system less efficient than the original diffuser type cooling system design due to the higher backpressures

plus the fan and pumping power required. This efficiency loss reduces the output of the plant and makes it necessary to replace this loss with additional capacity. The effect in 1972 dollars is as follows:

System type	Closed System	Combined System Open-Helper-Closed
Capacity loss, kW	35,780	2,240
Replacement cost, 10^6\$	6.72	0.42

Operation and maintenance - The use of mechanical draft cooling towers would increase operating costs over those of the original diffuser system due to the lower efficiency plus added fan and pumping costs; and also add the cost of maintenance of the towers to the overall plant operating costs. The present-worth (1972 dollars) operation and maintenance costs of mechanical draft cooling towers are shown below:

System type	Closed System	Combined System Open-Helper-Closed
Heat rate increase, percent	1.53	0.10
Heat rate increase, Btu/kWh	152.5	19.4
Efficiency loss, 10^6\$	4.64	0.28
Fan and pump, power, cost, 10^6\$	7.28	1.26
Total operation cost, 10^6\$	11.92	1.54
Maintenance cost, 10^6\$	6.17	4.65
Total operation and maintenance cost, 10^6\$	18.09	6.19

Total cost - The total estimated present-worth cost of the above items would then be 64.2 million dollars for the closed system and 41.9 million dollars for the combined system

with open-helper-closed capability. These costs are in addition to the cost of the mixing device. All costs are in 1972 dollars.

(f) Land requirements - The use of mechanical draft towers as an alternative means of cooling would not require the purchase of additional land beyond that already owned. The estimated excavation required for mechanical draft towers is 703,000 cubic yards for the closed system and 735,000 cubic yards for the open-helper-closed combined system. The area affected by either system would be 126 acres.

(g) Construction schedule - It is expected that the design, construction, and placement into operation of mechanical draft cooling towers would take approximately 19 to 25 months.

(4) Natural draft cooling towers - The use of natural draft cooling towers as an alternate cooling method would require two cooling towers each 468 feet in diameter at the base by 585 feet high for the closed system and 413 feet in diameter at the base by 516 feet high for the open-helper-closed combined system.

The present intake and discharge systems would be modified to permit the use of towers, with makeup and blowdown provisions. A new booster pumping station would be built to lift the circulating water to the towers. The water would be broken into drops by falling through lattice-like fill. Heat from the drops would be transferred to the air.

The airflow is created by the tall hyperbolic shells. The water returning from the towers would flow back by gravity to either the discharge pond or to the intake structure where

the existing circulating water pumps would then transport it through the plant condensers, depending on the mode of operation.

(a) Feasibility - Natural draft cooling towers have been used for many years. The first unit in the United States, Big Sandy, was built and put into operation in 1962. The largest tower in operation, to our knowledge, is 320 feet in diameter and 452 feet high. The following towers, larger than those required for Sequoyah, are under construction with none being in operation:

Ohio Power - Amos Plant, 400 feet in diameter by 492 feet high

Portland General Electric - Trojan Plant, 385 feet in diameter by 492 feet high

Toledo Edison - Davis Besse Plant, 411 feet in diameter by 492 feet high

Toledo Edison - Zimmer Plant, 383 feet in diameter by 479 feet high

The above towers are all counterflow type.

Figures 2.6-13 and 2.6-14 show a possible location and arrangement of the two natural draft towers on the plant site for the closed system and the combined system with open-helper-closed capability, respectively.

(b) Environmental considerations - The environmental considerations for natural draft towers are discussed in section 2.6-7.

(c) Economic considerations -

Initial investment - The initial investment required to install this alternative is estimated to be 42.2 million dollars for the closed system and 42.4 million dollars for the combined system with open-helper-closed capability.

Capability - With natural draft cooling tower systems, as in the case of mechanical draft cooling systems, the plant output would be reduced. The effect in 1972 dollars would be as follows:

System type	Closed System	Combined System Open-Helper-Closed
Capacity loss, kW	31,800	3,020
Replacement cost, 10^6\$	5.98	0.57

Operation and maintenance - Operating and maintenance costs would be greater for natural draft tower systems than for the original diffuser system. The present-worth (1972 dollars) operation and maintenance costs of natural draft cooling towers are shown below:

System type	Closed System	Combined System Open-Helper-Closed
Increase in heat rate, percent	1.36	0.13
Increase in heat rate, Btu/kWh	135.5	12.7
Increase in heat rate, 10^6\$	4.12	0.39
Pump power cost, 10^6\$	4.14	0.84
Total operational cost, 10^6\$	8.26	1.23
Maintenance cost, 10^6\$	0.86	0.86
Total operation and maintenance, 10^6\$	9.12	2.09

Total cost - The total estimated present-worth cost of the above items would then be 62.3 million dollars for the closed system and 45.0 million dollars for the combined system with open-helper-closed capability. All costs are in 1972 dollars.

(d) Land requirements - The land requirements and contemplated movement of facilities required by the use of the natural draft tower schemes will be similar to and not in excess of those required by the mechanical draft schemes. The estimated excavation required for natural draft towers is 914,000 cubic yards for the closed system and 848,000 cubic yards for the open-helper-closed combined system. The area affected by each system for natural draft towers is 107 acres.

(e) Construction schedule - It is expected that the design, construction, and placement into operation of natural draft cooling towers would take approximately 40 months.

(5) Spray canal system - The use of a spray canal system as an alternative combined-cycle heat dissipation method would require a canal 200 feet wide at the water surface and approximately 17,600 feet long for the closed system and 16,000 feet long for the combined system with open-helper-closed capability. A total of 440 and 400 power spray modules spaced four abreast would be required for the closed system and open-helper-closed combined system, respectively.

(a) Feasibility - The use of a spray canal system as an alternative heat dissipation method is considered feasible for this site. Figures 2.6-15 and 2.6-16 show possible locations and arrangements on the plant site.

The use of a spray canal for power plant cooling is a relatively new concept and only in recent months has a large unit been put into operation. Typical among units adopting this mode of operation for heat dispersal are:

User	Location	Millions Btu/h	Purpose
Commonwealth Edison	Dresden	5,466	Temporary startup, units 2 and 3
Gulf States Utilities	Beaumont, Texas	-	Salt water test
Detroit Edison	Fermi	261	Testing
Virginia Electric and Power	Chesterfield	2,067	Topping
Public Service of New Hampshire	Merrimack	429	Topping

The largest unit, Dresden, has been in operation for over 1 year in conjunction with units of 809-MW capacity. By comparison the heat rejected from the Sequoyah plant (2,441-MW capacity) is 16,500 million Btu/h.

Spray canal systems have demonstrated heat dispersal capability for the above installation. As experience is being obtained, this method is being adopted for other large stations. Some of the utilities which are constructing spray canal systems are New England Power Company at the Brayton Point Station, Mississippi Power Company at Plant Jack Watson, Commonwealth Edison at Quad Cities Station, and Pacific Gas and Electric Company at the Pittsburgh Station.

(b) Environmental considerations - Physical and chemical characteristics of canal effluents - Water necessary for operation of the spray canal in the closed mode will be obtained from the Tennessee River at the plant site. This quantity of water (makeup) will be dependent upon the following items: (1) amount of blowdown necessary to control the total dissolved solids in the condenser cooling system, (2) desirable amount of blowdown necessary to maintain the water quality in the canal

system such that corrosion or scaling control chemicals will not have to be added, (3) the amount of evaporation from the canal, and (4) drift losses. With a blowdown concentration factor of 2, the total makeup required would be approximately 6 percent of the circulating flow or 147 ft^3/s.

The amount of blowdown and its dissolved solids concentration required for continuous operation with spray canal is estimated to be approximately 3 percent of the circulating water flow or 75 ft^3/s.

Temperature of the blowdown for the spray canal closed-cycle system would be approximately 68°F under average winter conditions, 77°F under average fall and spring conditions, and 86°F under average summer conditions. Peak summer conditions can produce temperatures near 93°F a few hours a day on the hottest summer days. Corresponding temperatures for closed-loop mode on a combined-cycle system are 71°, 79°, 88°, and 94°F, respectively. Discussion of peak temperature and low reservoir flow conditions in mechanical draft tower systems would also be applicable here although allowable holdup time on blowdown would be longer for the spray canal system due to the larger quantity of water in the system.

Drift, the water blown from the spray canal by wind, is estimated to involve quantities of approximately 0.007 percent of the circulating water flow, or 0.2 ft^3/s. Although the water is sprayed into the air by the spraying modules and is subject to being carried away, the droplets are large and should be carried only a short distance. Furthermore, the channel edge would be approximately 20 feet from the side spray modules and the edge would be sloped back

to the channel so that a large percentage of water which may be blown by the wind would return back to the canal.

Atmospheric impact - Effects from the use of a spray canal system in the Sequoyah Nuclear Plant area could involve some fogging and icing. These effects are largely dependent on the quantity of evaporation of the spray effluent and the specific humidity deficit of the local atmosphere. Therefore, the expected surface effects could be somewhat greater than those for cooling towers because of the usually lower early morning ambient temperature and greater moisture content within the near-surface layer where most of the effluent will be dispersed. (Water is sprayed upward at a low level, 15 to 20 feet, as compared to plume release heights of 60 to 75 feet and 400 feet to 500 feet for mechanical and natural draft towers, respectively.)

Heavy natural fogging conditions would be expected to occur about 35 days per year with most fogging between 0300 and 0800 local time. In many cases visible plumes generated by the spray canals could move downwind near ground level with intensifying effects on these natural fogs. In addition, spray canal induced fogging would most probably occur north through northeast and south-southeast through southwest of the plant--the sectors with the highest frequency of plume occurrence. Figure 2.6-17 indicates that at least 6 percent of the days (22 days per year) the plume would extend about 1 mile or more in each of these seven sectors. County Highway 5550 with an average daily traffic count of 2,270 could be reached by the vapor plumes as often as: 6 percent of the days (22 days per year) in the south-southeast sector, 7 percent of the days (26 days per year) in the south sector, and 4.5 percent of the days (16 days per year) in the south-southwest sector. The plume

could affect County Highway 4306, which traverses the west-southwest through northwest sectors, with an average daily traffic count of 1,130, as often as 2 percent of the days (7 days per year) in the west-southwest sector. Vapor plumes of length sufficient to reach portions of Harrison Bay State Park in the south-southwest sector could occur as often as 3 percent of the days (11 days per year).

Periods of potential spray canal induced icing when the ambient temperature is below freezing are expected about 70 days per year during the 5-month period, November through March, with the highest frequency in January and February. Duration of the heaviest icing would depend on the persistency of the below-freezing temperatures. Most severe conditions are expected between midnight and 0700 local time. Figure 2.6-18 indicates that icing could occur on each of the County Highways 5550 and 4306 about 0.5 percent of the days (2 days per year). Also, icing could occur in Harrison Bay State Park about 1 percent of the days (4 days per year).

(c) Aesthetics - The use of a spray canal would create an aesthetic impact to ground and water transportation in the vicinity of the plant.

(d) Noise - The use of a spray canal will increase noise levels at the plant site by a small amount. This increase will be due to motor noise plus the falling water. A test, conducted on a 17-module test system against a background of 62 to 64 db(A) indicated 76 db(A) at 100 feet. Normally acceptable noise levels would be expected at site boundary.

(e) Economic considerations -

Initial investment -

The initial investment required to install a spray canal system is estimated to be 44.5 million dollars for the closed system and 42.1 million dollars for the combined system with open-helper-closed capability. Between 30 and 40 percent of the estimated amounts are for rock excavation which has been estimated without benefit of seismic analysis of the proposed canal centerline.

Capability - With the spray canal, as with any other type of heat dissipation device, the plant output would be reduced by losses which affect the ability to assure TVA's customers of the service they would have had with the original diffuser system. The effect in 1972 dollars is as follows:

System type	Closed System	Combined System Open-Helper-Closed
Capacity loss, kW	42,400	1,960
Replacement cost, 10^6\$	7.98	0.36

Operation and maintenance -

Operating and maintenance costs would be greater than for the original diffuser system. The present-worth (1972 dollars) operation and maintenance costs for the spray canal are shown below:

System type	Closed System	Combined System Open-Helper-Closed
Increase in heat rate, percent	1.83	0.08
Increase in heat rate, Btu/kWh	181.4	8.2
Increase in heat rate, 10^6\$	5.52	0.24
Spray and pump power cost, 10^6\$	7.80	1.44
Total operational cost, 10^6\$	13.32	1.68
Maintenance cost, 10^6\$	2.86	2.60
Total operation and maintenance, 10^6\$	16.18	4.28

Total cost - The total estimated present-worth cost of the above items would then be 68.7 million dollars for the closed system and 46.7 million dollars for the combined system with open-helper-closed capability. These costs are in addition to the cost of the mixing device. All costs are in 1972 dollars.

(f) Land - Based on a preliminary investigation of site conditions, it is estimated that all spray canal schemes would require the purchase of 170 acres of additional land. The estimated excavation required for a spray canal is 6,139,000 cubic yards for the closed system and 5,739,000 cubic yards for the open-helper-closed combined system. The area affected by each system is 320 acres for closed and 275 acres for open-helper-closed.

(g) Construction schedule - It is expected that the design, construction, and placement into operation of a spray canal would take approximately 21 to 27 months.

(6) Cooling lake system - Preliminary investigations indicate that the use of a cooling lake system would require approximately 3,500 acres of exposed water surface based on a rule of thumb of 1.5 acres per MW of nuclear capacity. The exact lake size and the corresponding expected thermal performance cannot be determined without an extensive investigation of the shape and depth of the lake, the location of the inlet and outlet to the lake, and the climatic history of the area. The Sequoyah plant site is located on a peninsula bounded on three sides by Chickamauga Reservoir and on the fourth side by very high ground. In order to impound a reservoir of the anticipated size, it would have to be located many miles from the plant, and the normal water level would have to be 50 to 150 feet above the existing reservoir. The construction of the reservoir would require many miles of canals and high dikes.

While cooling lakes are an old and well-established concept of heat rejection, the area surrounding the site must be suitable. The topography of the Sequoyah site, however, demonstrates that a cooling lake would not be feasible.

(7) Other heat dissipation methods - The additional possible ways of modifying the heat dispersal system discussed below have been suggested.

(a) Conversion of the discharge pond into a spray pond - Preliminary investigations indicate that the use of a spray pond system would require approximately 350 acres based on a rule of thumb of 0.15 acre per MW of nuclear capacity. Depending on the flow through the diffuser at minimum water level, the available surface

area in the discharge pond is between 15 and 30 acres. This size spray pond would have very little effect on the amount of heat released through the diffuser and would result in some adverse atmospheric impact.

(b) Construct a pipeline to the diffuser pipes to eliminate the discharge pond - The diffuser pipe begins 3,200 feet from the discharge structure. Pipes installed between the discharge structure and the diffuser would cost 1.5 million dollars installed and would cost an additional $150,000 over the life of the plant in additional pumping power due to the friction loss in the pipe. These additional costs are in excess of the environmental costs discussed in Appendix B.

(c) Operate the cooling towers for auxiliary essential raw cooling water continuously in a combined mode - These are seismically designed towers which are intended to operate only in the event of loss of the normal source of essential raw cooling water. Each of the four towers is designed for a flow of 6,300 gal/min for a total of 25,200 gal/min as compared to a main circulating water flow of 1,120,000 gal/min. The continuous operation of these towers would have very little effect on the amount of heat released through the diffuser, would require a timely changeover to emergency service, and would result in some atmospheric impact.

(d) Modify the circulating water system to reduce the temperature rise through the plant - The only way to reduce the temperature rise through the plant is to pump more water through the plant which results in the withdrawal of more biota. A higher flow and lower temperature into the diffuser would require

larger diffusers and, although it would reduce the local maximum temperature, the size of the mixing zone would not be significantly affected.

(8) Evaluation of alternative heat dissipation methods - Table 2.6-3 summarizes the economic evaluation (1972 dollars) of the feasibile alternatives.

REFERENCES FOR SECTION 2.6

1. "General Water Quality Criteria for the Definition and Control of Pollution in the Waters of Tennessee," Tennessee Water Quality Control Board, December 17, 1971, p. 5.

2. American Public Health Association, American Water Works Association, Water Pollution Control Federation, Standard Methods for the Examination of Water and Wastewater (New York: American Public Health Association, Inc., 1965), p. 409.

3. Harold E. Babbitt, E. Robert Baumann, Sewerage and Sewage Treatment (New York: John Wiley and Sons, Inc., 1958), pp. 348, 349, 378.

4. Rossie, J. P. and W. A. Williams, Jr., "The Cost of Energy from Nuclear Power Plants Equipped with Dry Cooling Systems," ASME. 1972.

5. Leung, P., G. R. Reti, and J. R. Schilling, "Dry Cooling Tower Plant Thermodynamic and Economic Optimization," ASME. 1972.

NUMBER AND PERCENT OF THE DAYS DURING THE 6-YEAR PERIOD 1966-71 THAT TENNESSEE TEMPERATURE CRITERIA WOULD NOT BE MET

FOR EACH OF THREE MIXING CRITERIA - 1-UNIT AND 2-UNIT OPERATION - SEQUOYAH NUCLEAR PLANT ON DIFFUSER SYSTEM

Operation	Assuming Condenser Discharge Mixes With 60 Percent of Total Riverflow Days Equaled or Exceeded						Assuming Condenser Discharge Mixes With 75 Percent of Total Riverflow Days Equaled or Exceeded						Assuming Condenser Discharge Mixes With 100 Percent of Total Riverflow Days Equaled or Exceeded					
	5.4°F Rise		86.9°F Max		5.4°F Rise or 86.9°F Max		5.4°F Rise		86.9°F Max		5.4°F Rise or 86.9°F Max		5.4°F Rise		86.9°F Max		5.4°F Rise or 86. °F Max	
	Number	%	Number	%	Number	%	Number	%	Number	%	Number	%	Number	%	Number	%	Number	%
One Unit - full load																		
1966	15	4.1	3	0.8	16	4.4	12	3.3	1	0.3	12	3.3	7	1.9	1	0.3	7	1.9
1967	23	6.3	1	0.3	23	6.3	19	5.2	1	0.3	19	5.2	11	3.0	0	0.0	11	3.0
1968	50	13.7	4	1.1	51	13.9	29	7.9	2	0.5	29	7.9	15	4.1	2	0.5	15	4.1
1969	28	7.7	4	1.1	29	7.9	18	4.9	3	0.8	19	5.2	12	3.3	1	0.3	12	3.3
1970	24	6.6	1	0.3	24	6.6	10	2.7	1	0.3	10	2.7	4	1.1	0	0.0	4	1.1
1971	12	3.3	1	0.3	12	3.3	6	1.6	0	0.0	6	1.6	3	0.8	0	0.0	3	0.8
TOTALS	152	6.9	14	0.6	155	7.1	94	4.3	8	0.4	95	4.3	52	2.4	4	0.2	52	2.4
Two Units - full load																		
1966	130	35.6	19	5.2	135	37.0	81	22.2	11	3.0	83	22.7	27	7.4	3	0.8	27	7.4
1967	66	18.1	10	2.7	66	18.1	54	14.8	8	2.2	54	14.8	32	8.8	3	0.8	32	8.8
1968	152	41.5	30	8.2	152	41.5	116	31.7	16	4.4	116	31.7	80	21.9	6	1.6	80	21.9
1969	130	35.6	27	7.4	136	37.3	71	19.5	17	4.7	77	21.1	39	10.7	5	1.4	39	10.7
1970	122	33.4	13	3.6	122	33.4	72	19.7	5	1.4	72	19.7	33	9.0	1	0.3	33	9.0
1971	63	17.3	2	0.5	63	17.3	42	11.5	1	0.3	42	11.5	19	5.2	1	0.3	19	5.2
TOTALS	663	30.3	101	4.6	674	30.8	436	19.9	58	2.6	444	20.3	230	10.5	19	0.9	230	10.5

Table 2.6-2

TVA-BUILT THERMAL-ELECTRIC POWER PLANTS

Plant	Unit Number	Normal Full Load, per Unit	First Year of Commercial Operation: First Unit	First Year of Commercial Operation: Last Unit	Total Plant: Thermal Rise in Condensers	Total Plant: Condenser Flow	Total Plant: Heat to Stream (Btu)	Mean Flow of Receiving Stream
		megawatts			°F	gal/min	billions per hr	ft^3/s
Browns Ferry	1-3	1,150	'73	'74	25	1,800,000	22.2	49,000
Bull Run	1	900	'67		18	397,900	3.6	4,310
Colbert	1-4	200	'55	'55	13	865,500	5.8	50,500
	5	500	'65					
Cumberland	1,2	1,300	'73	'73	12	1,616,000	9.3	24,000
Gallatin	1,2	250	'56	'57	16	592,400	4.7	18,000
	3,4	275	'59	'59				
John Sevier	1-4	200	'55	'57	15	454,000	3.5	3,540
Johnsonville	1-6	125	'51	'53	13	1,029,000	6.5	61,000
	7-10	150	'58	'59				
Kingston	1-4	150	'54		14	967,000	6.9	6,300
	5-9	200		'55				
Paradise	1,2	690	'63	'63	26	452,400	5.8	8,370
Shawnee	1-10	150	'53	'56	12	1,076,000	6.5	255,400
Watts Bar	1-4	60	'42	'45	10	280,800	1.5	26,400
Widows Creek	1-4	135	'52					35,200
	5,6	130		'54	15	1,092,400	8.2	
	7	525	'61					
	8	525	'65					

Table 2.6-3

COMPARISONS OF ALTERNATIVE HEAT DISSIPATION FACILITIES

Heat Diss Eqpt System type	Mechanical Draft Cooling Towers		Natural Draft Cooling Towers		Power Spray Modules	
	Closed System	Combined System Open Helper Closed	Closed System	Combined System Open Helper Closed	Closed System	Combined System Open Helper Closed
Average annual net turbine heat rate (Btu/kWh)	10,089.0	9,945.9	10,072.0	9.949.2	10,117.9	9,944.7
Cooling facility operation, % of time	100	20.3	100	20.3	100	20.3
Present Worth Cost Comparisons[a]						
Facilities cost, $ million	39.40	35.30	47.17	42.36	44.50	42.10
Operating cost, $ million	11.92	1.54	8.26	1.23	13.32	1.68
Capability cost, $ million	6.72	0.42	5.98	0.57	7.98	0.36
Maintenance cost, $ million	6.17	4.65	0.86	0.86	2.86	2.60
Total, $ million	64.21	41.91	62.27	45.02	68.66	46.74

a. All costs shown are present worth costs (1972 dollars) in addition to the original design using one-through cooling.

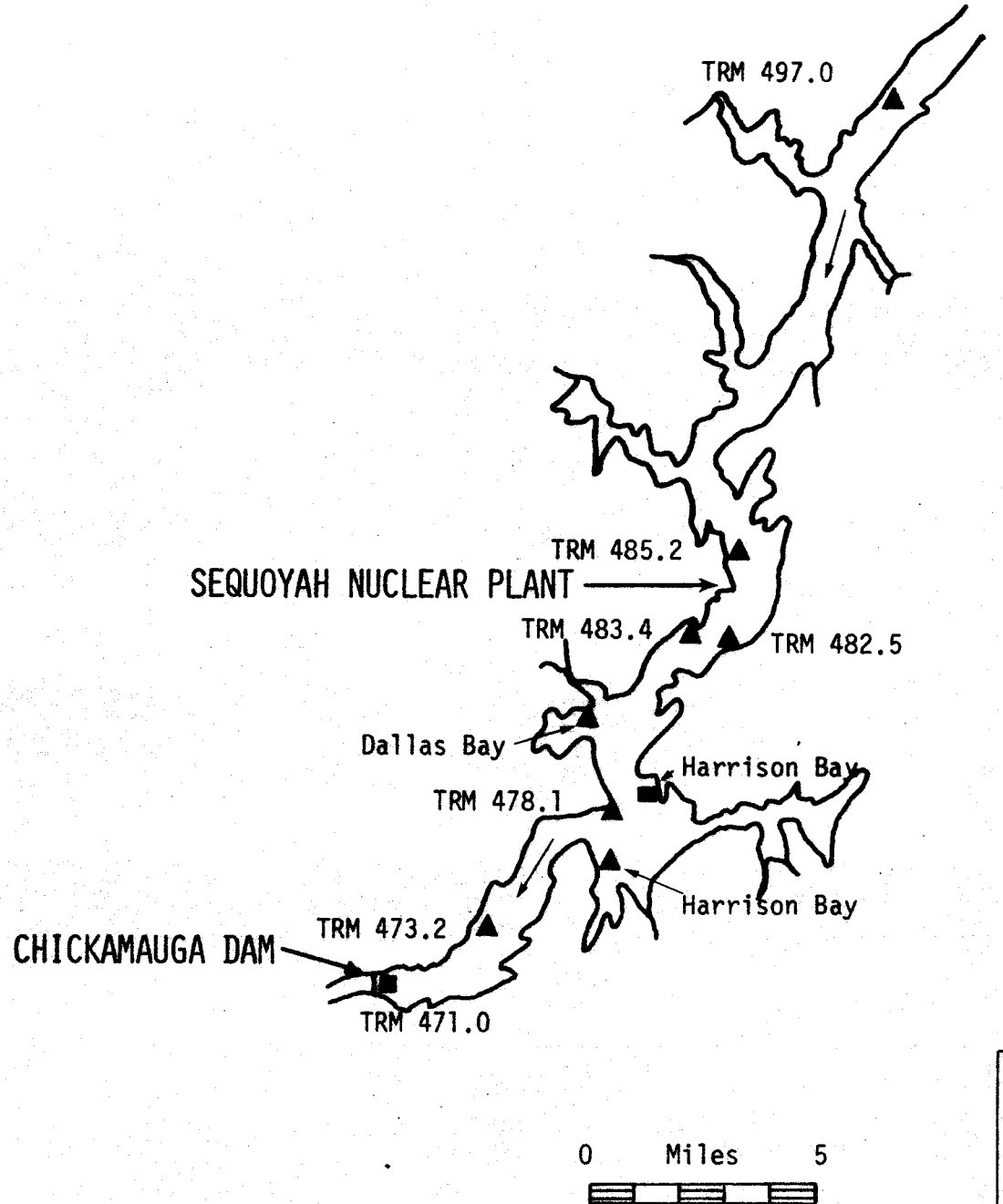

Figure 2.6-1
LOCATIONS OF TEMPERATURE MONITORS
SEQUOYAH NUCLEAR PLANT

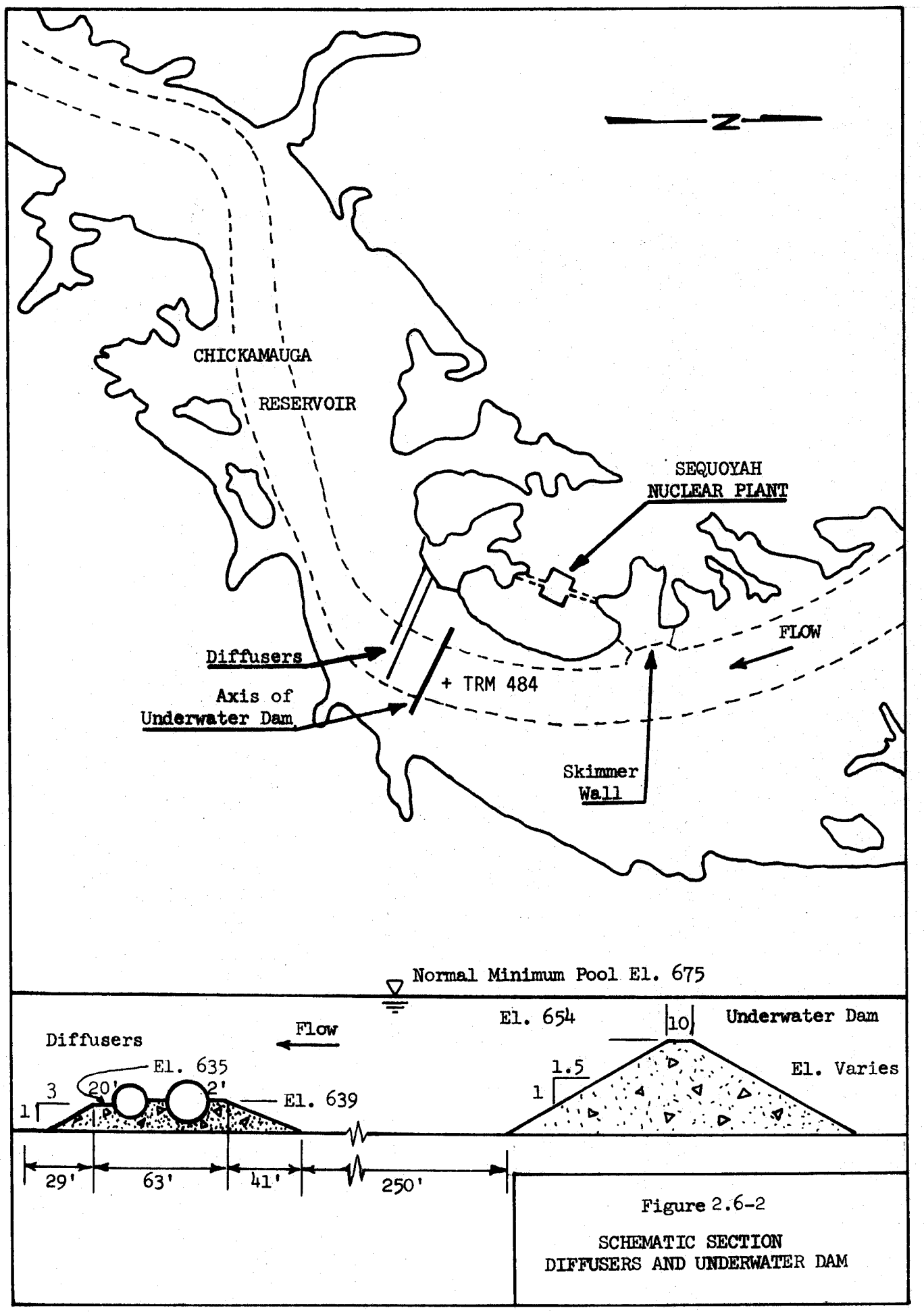

Figure 2.6-2

SCHEMATIC SECTION
DIFFUSERS AND UNDERWATER DAM

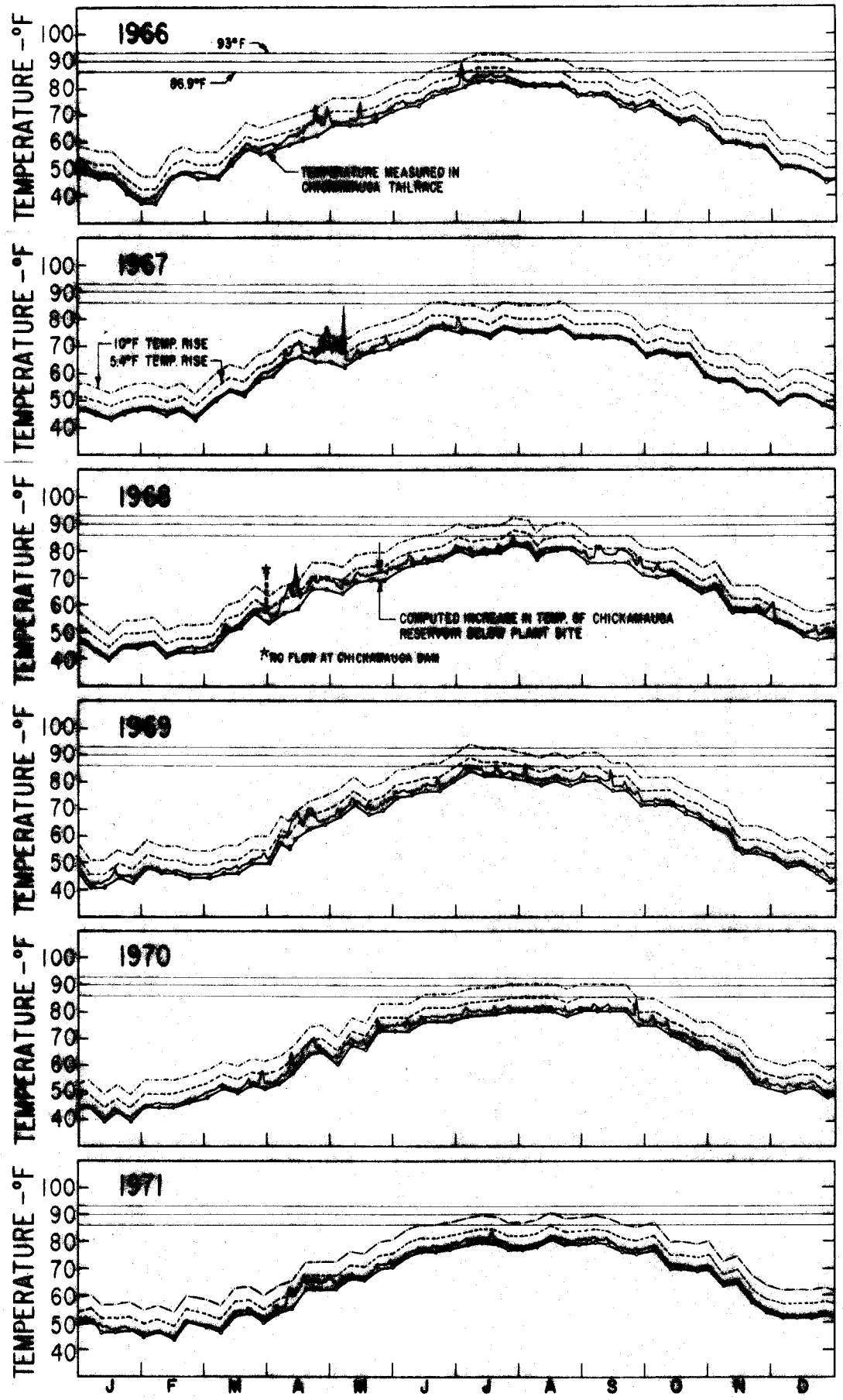

COMPUTED INCREASE IN WATER TEMPERATURE IN CHICKAMAUGA RESERVOIR

ASSUMING ONE UNIT AT SEQUOYAH NUCLEAR PLANT IN FULL OPERATION AND COMPLETE MIXING OF WARM CONDENSER DISCHARGE WITH ENTIRE FLOW OF RIVER

Figure 2.6-13

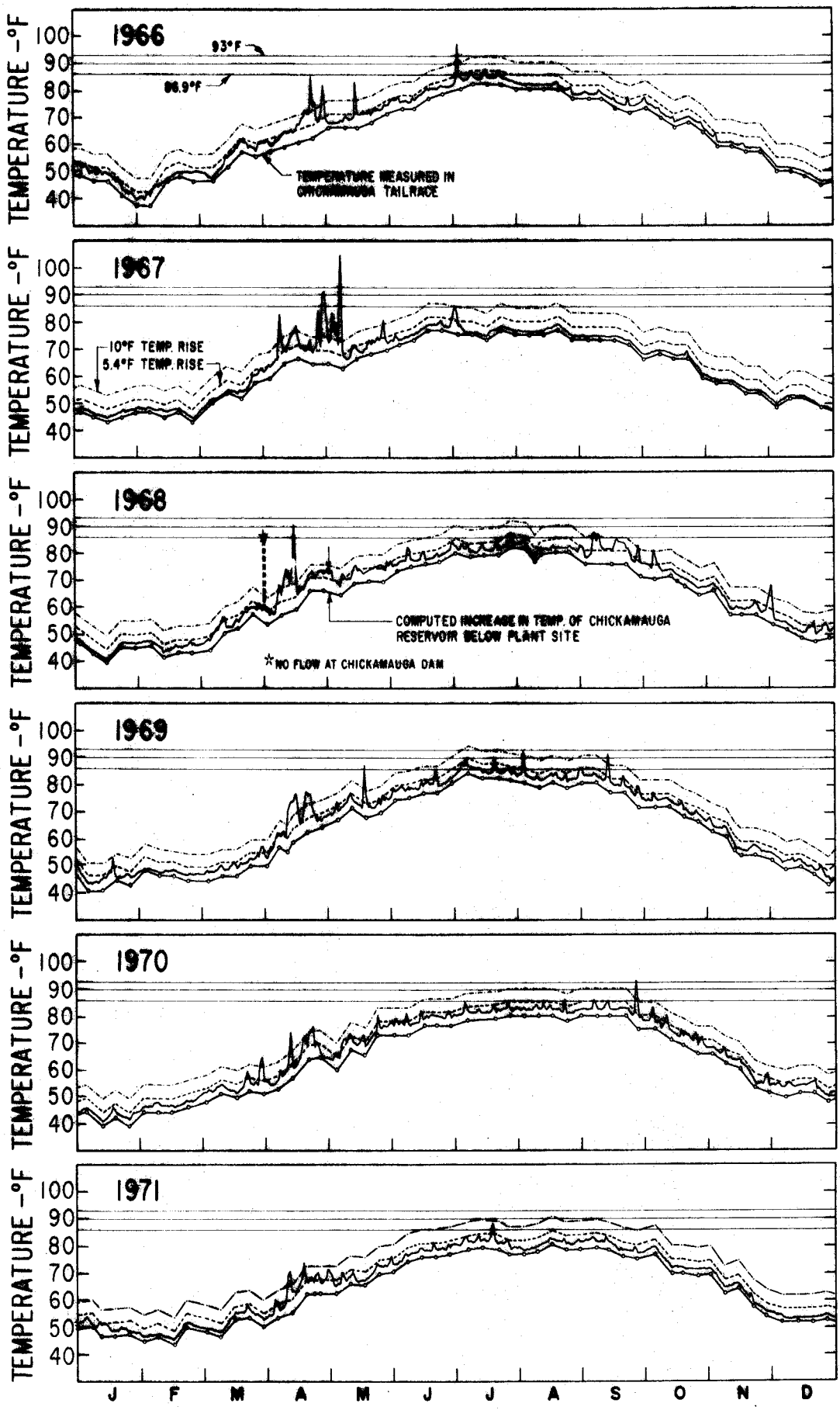

COMPUTED INCREASE IN WATER TEMPERATURE IN CHICKAMAUGA RESERVOIR

ASSUMING TWO UNITS AT SEQUOYAH NUCLEAR PLANT IN FULL OPERATION AND COMPLETE MIXING OF WARM CONDENSER DISCHARGE WITH ENTIRE FLOW OF RIVER

*Example: 0.5 percent of the days (2 days per year) plumes with lengths ≥ 2.4 miles occur in the 22½° sector north of the site.

Percent of total days in a year

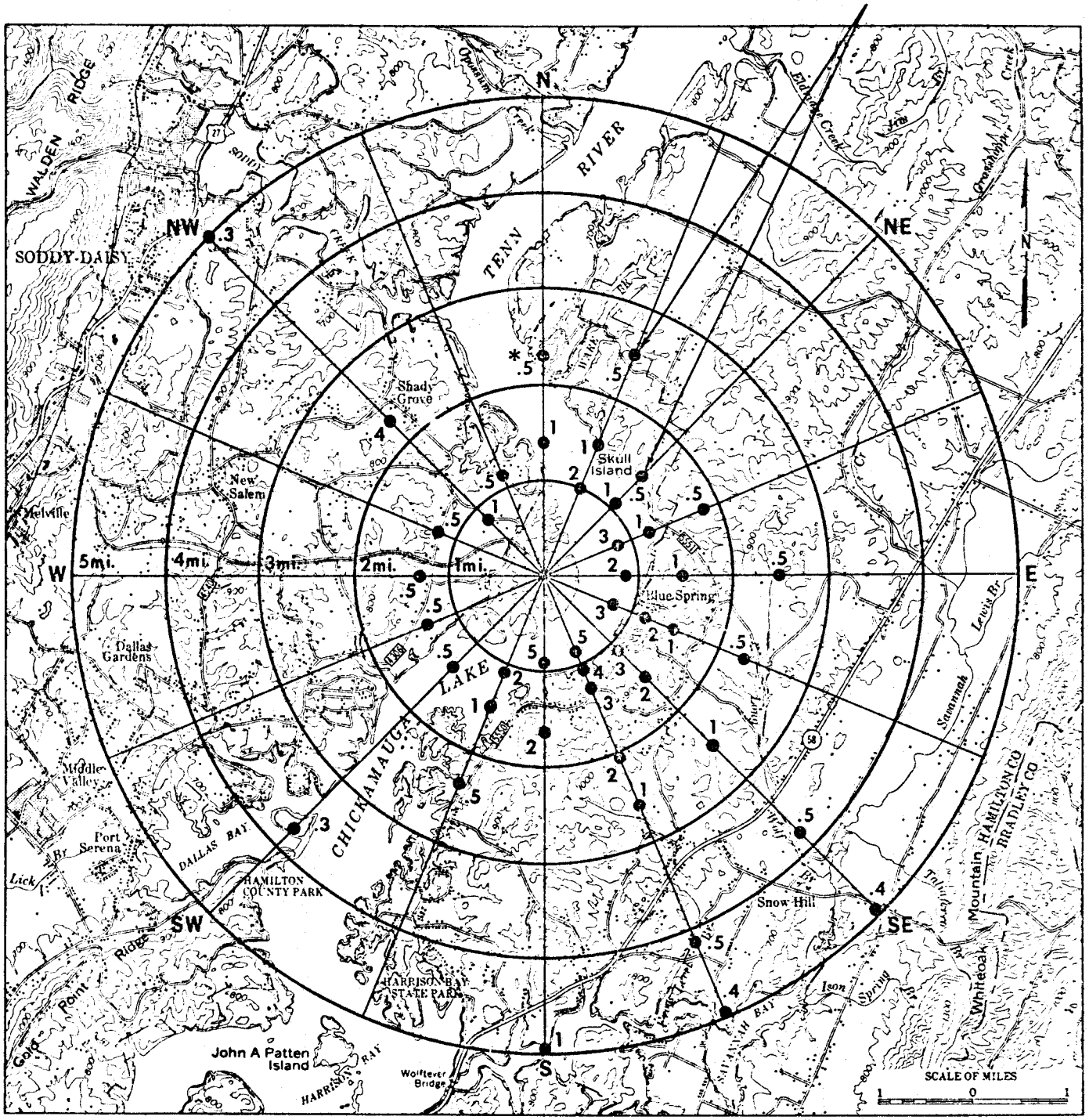

Based on daily early morning record
Aug. 1970 – Aug. 1972

Figure 2.6 – 5 EXPECTED PLUME LENGTH AND FREQUENCY OF OCCURRENCE FOR 16 COMPASS POINT SECTORS (ALL TEMPERATURES) NATURAL DRAFT COOLING TOWERS SEQUOYAH NUCLEAR PLANT SITE

* Example: 0.5 percent of the days (2 days per year) plumes with lengths ≥ 5 miles occur in the 22½° sector south of the site.

Percent of total days in a year

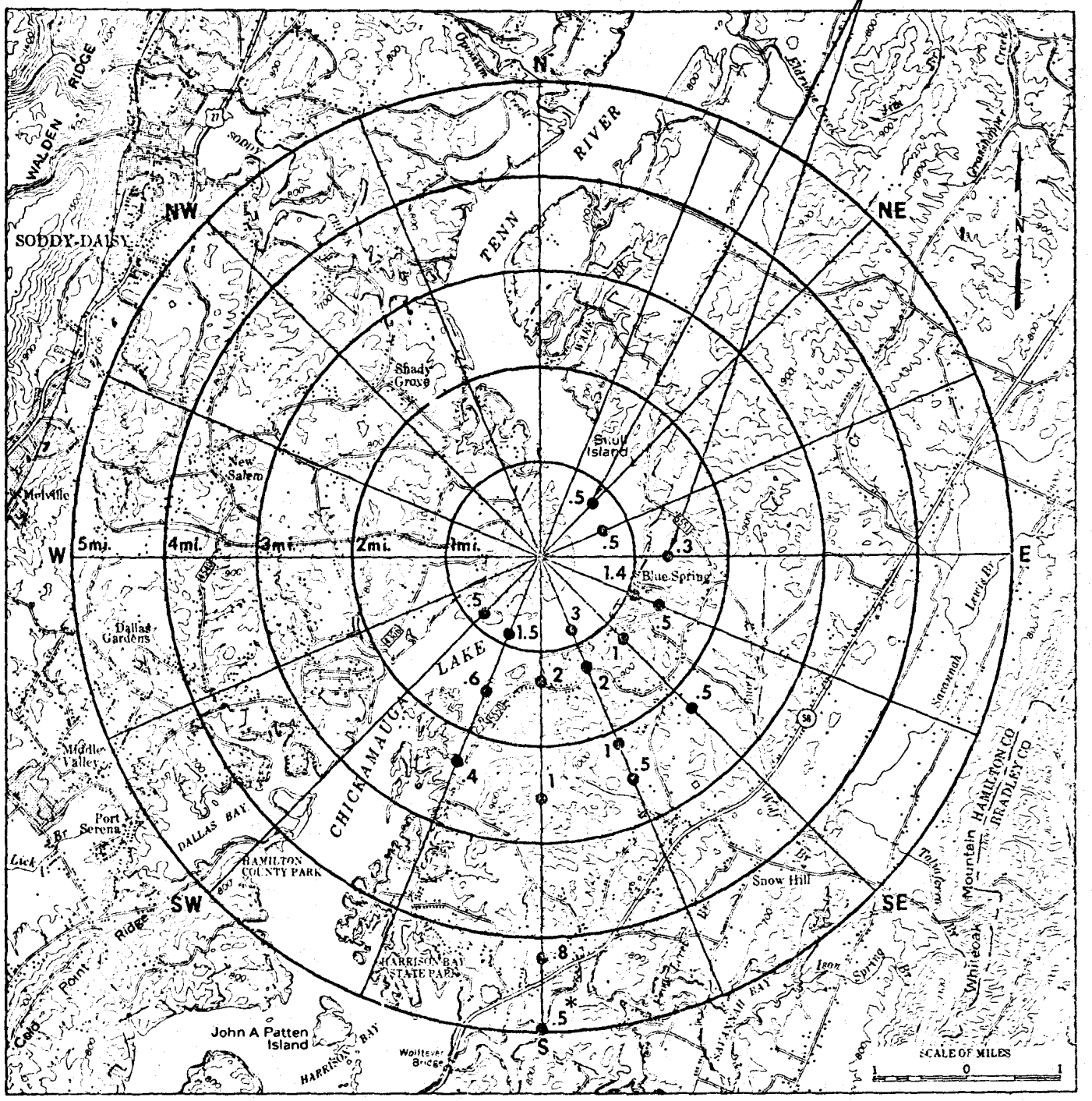

Based on daily early morning record
Aug. 1970 – Aug. 1972

Figure 2.6 – 6 EXPECTED PLUME LENGTH AND FREQUENCY OF OCCURRENCE FOR 16 COMPASS POINT SECTORS (AMBIENT TEMPERATURE BELOW FREEZING) NATURAL DRAFT COOLING TOWERS SEQUOYAH NUCLEAR PLANT SITE

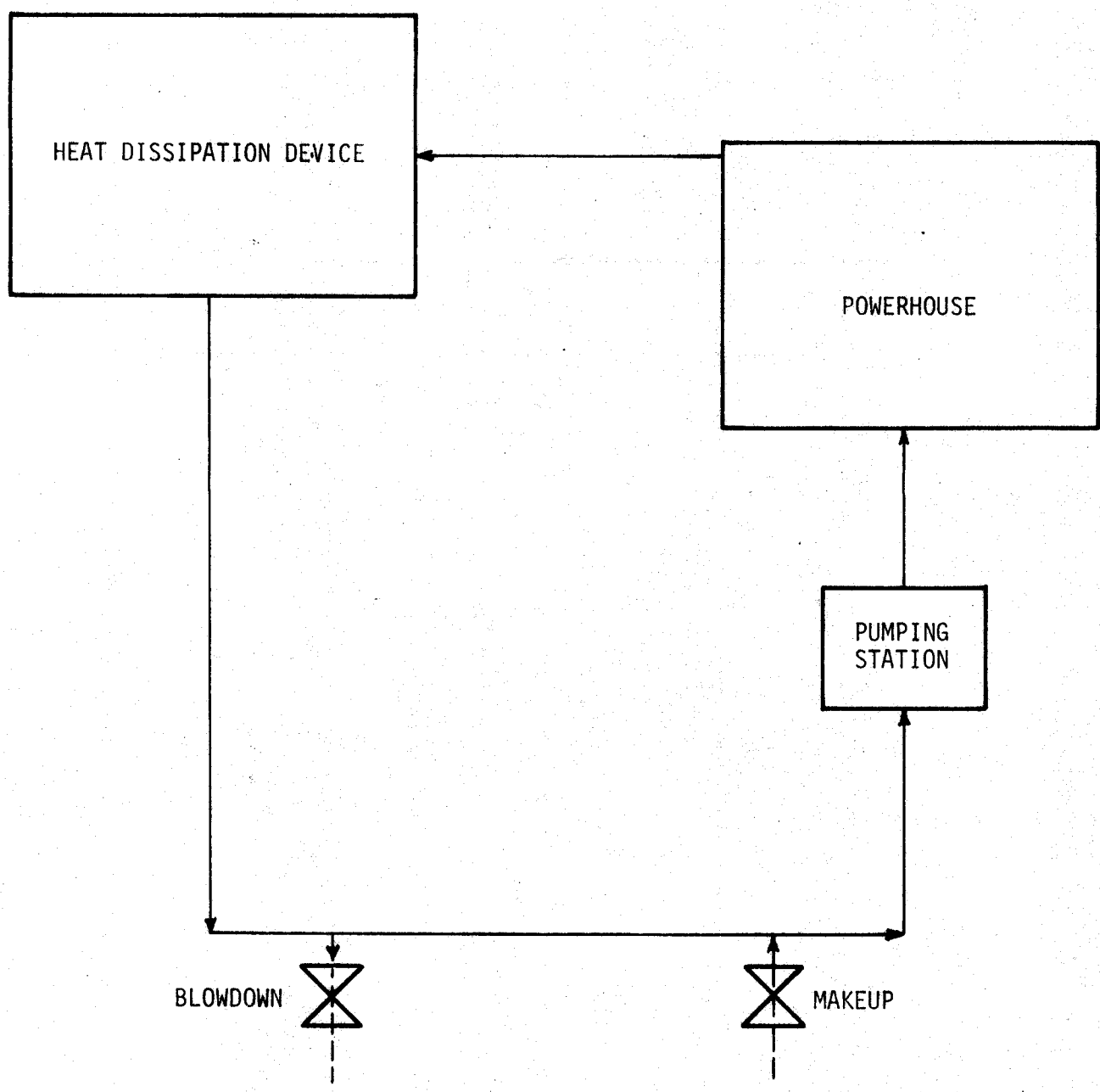

Figure 2.6-7

SEQUOYAH NUCLEAR PLANT
ALTERNATIVE COOLING SYSTEM
CLOSED-CYCLE SYSTEM

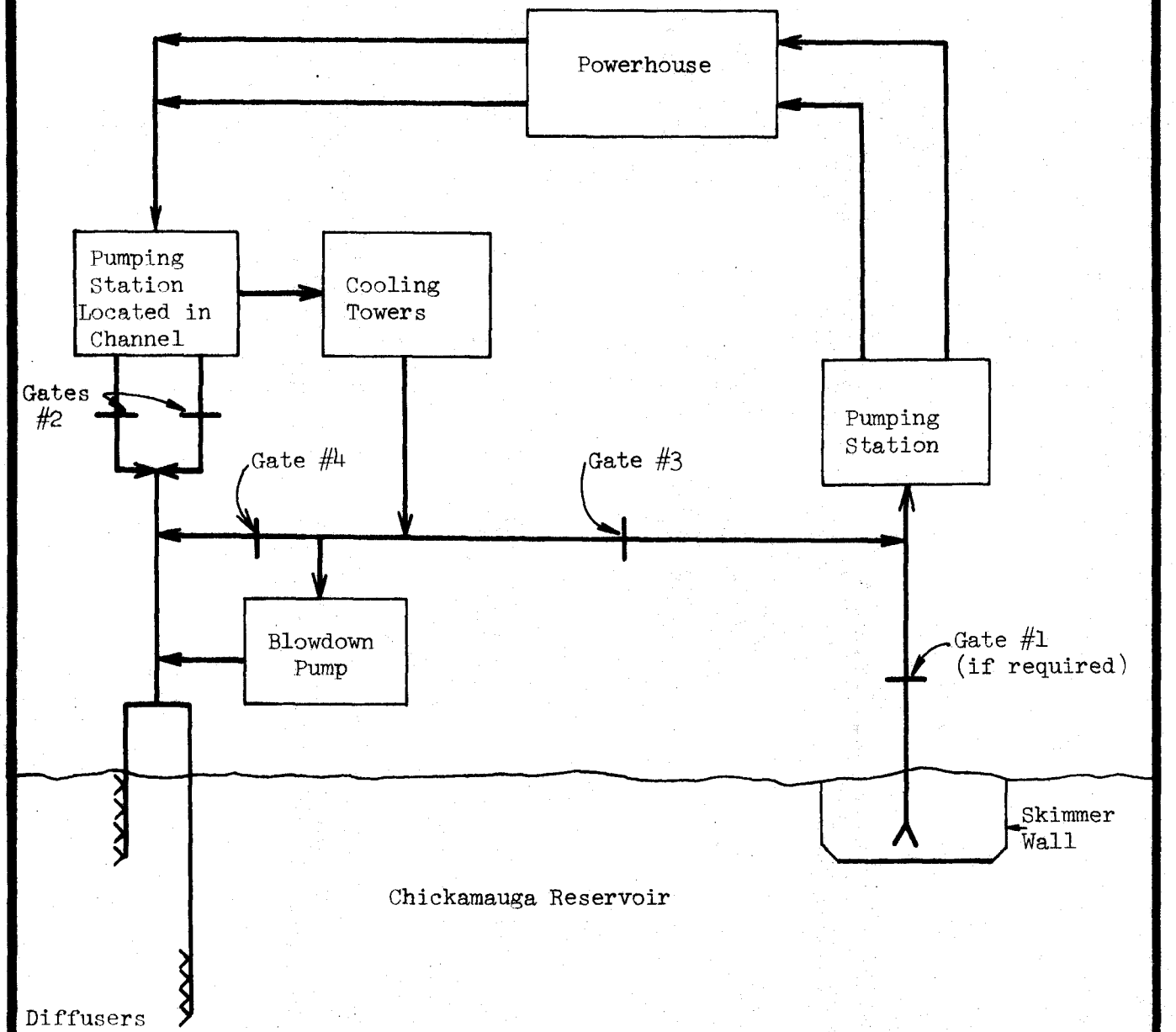

Gate No.	1	2	3	4
River cooling	O	O	C	C
Helper cooling	O	C	C	O
Closed cooling	C	C	O	C

Figure 2.6-8
Diagram Showing Gate Arrangements For Various Modes of Operation of Once-Through and Supplemental Cooling Water Facilities

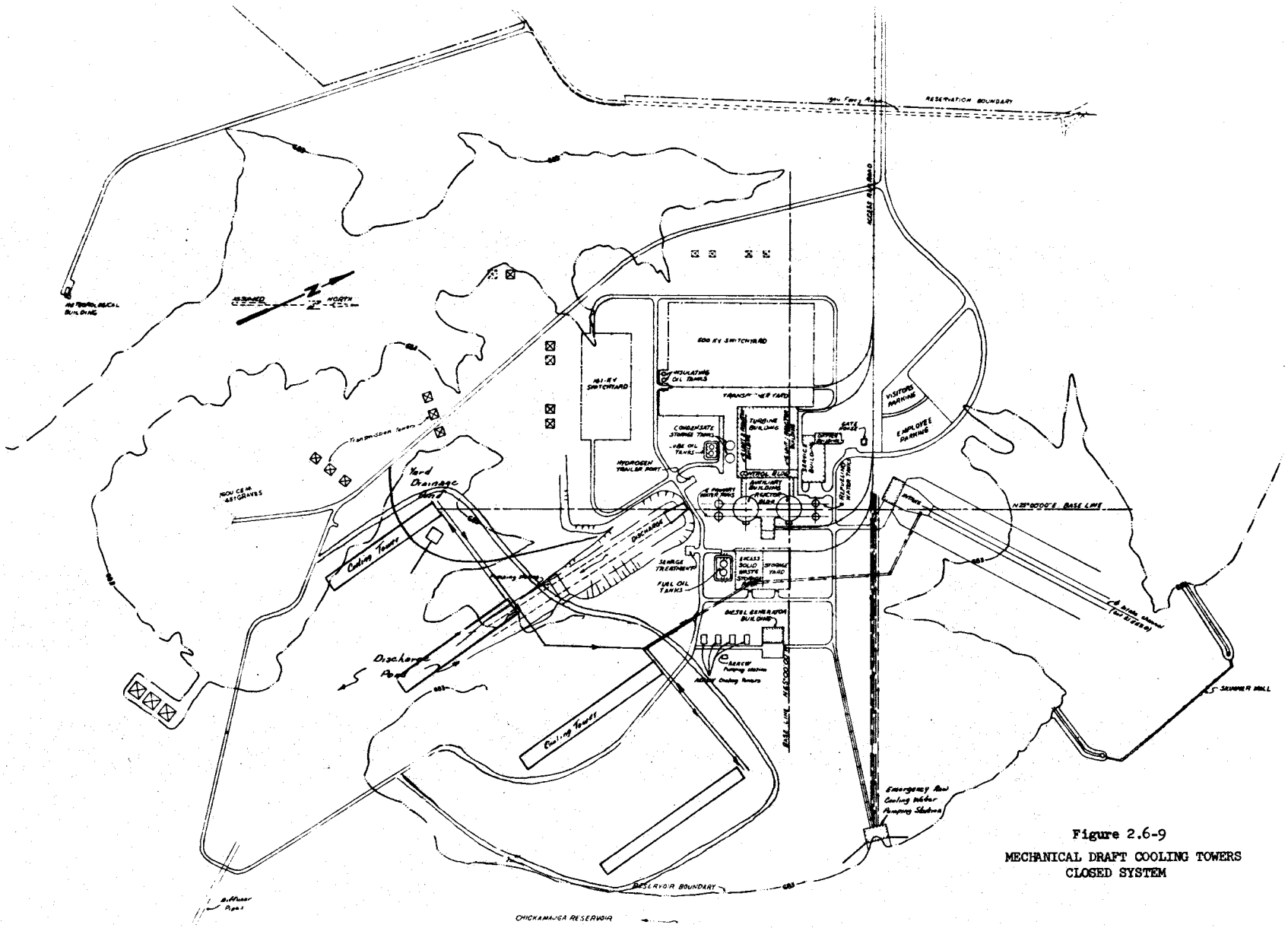

Figure 2.6-9
MECHANICAL DRAFT COOLING TOWERS
CLOSED SYSTEM

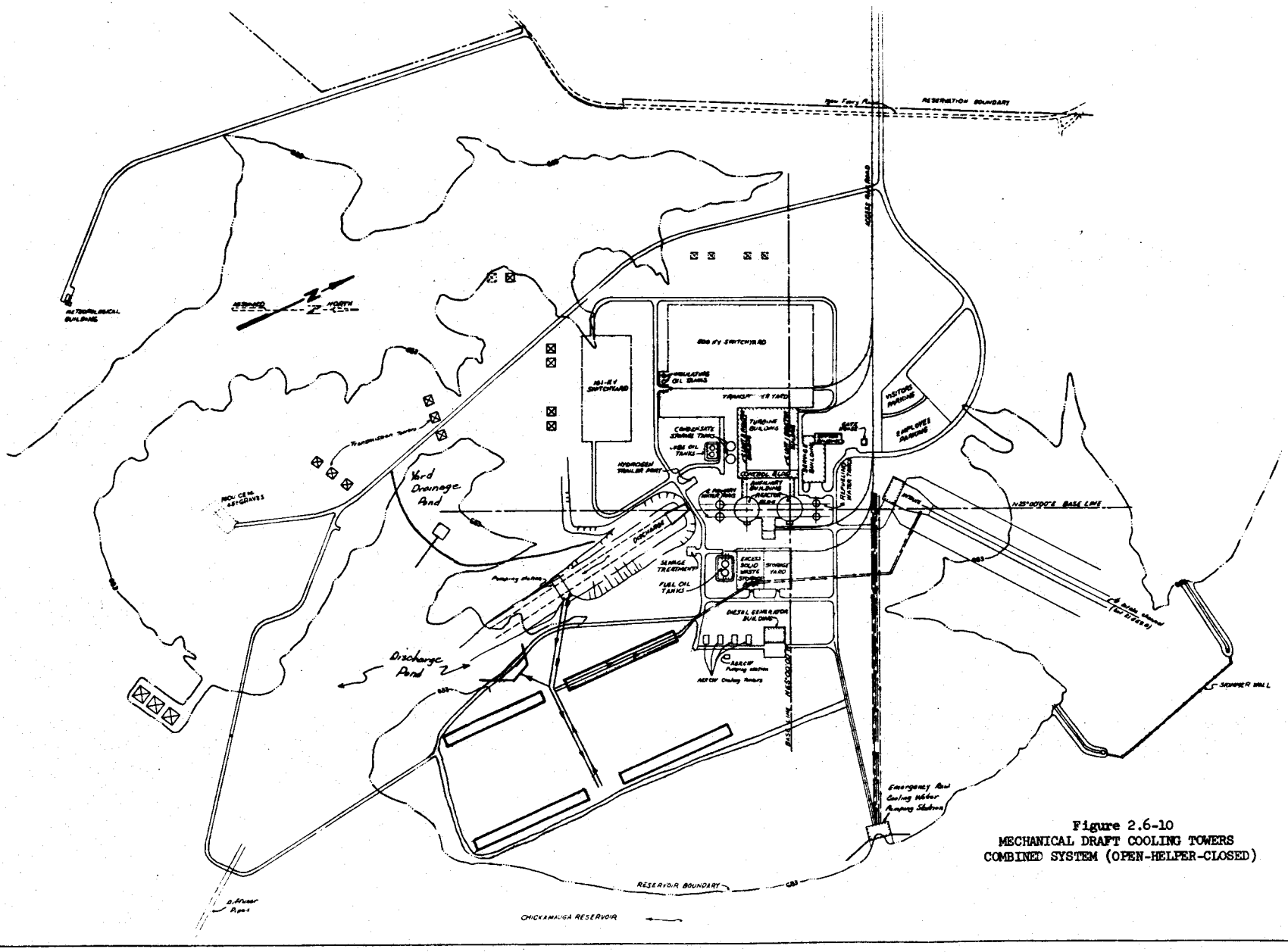

Figure 2.6-10
MECHANICAL DRAFT COOLING TOWERS
COMBINED SYSTEM (OPEN-HELPER-CLOSED)

*Example: 0.5 percent of the days (2 days per year) plumes with lengths ≥ 4.2 miles occur in the 22½° sector north of the site.

Percent of total days in a year

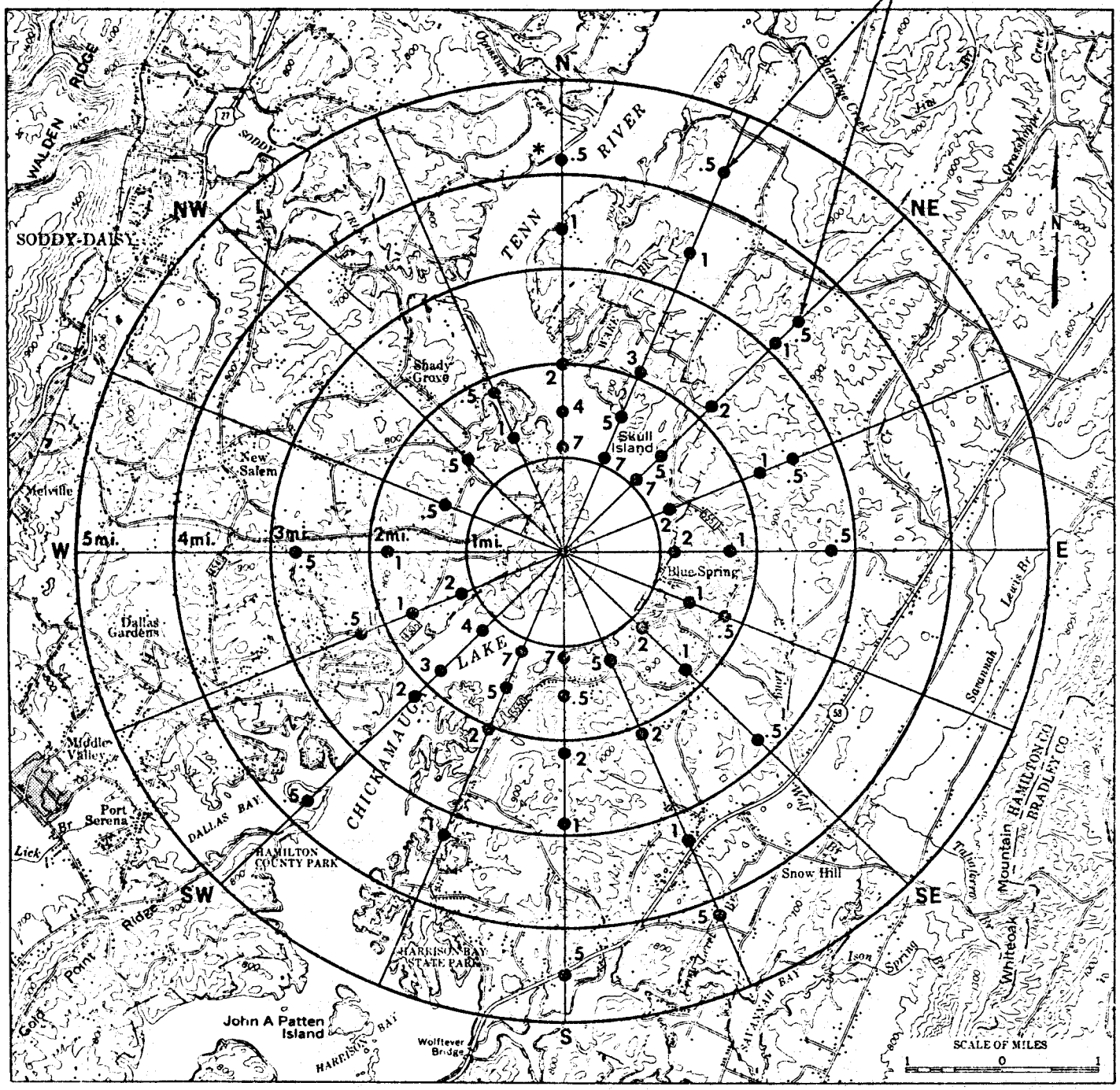

Based on daily early morning record
April 1971 – March 1973

Figure 2.6 – 11 EXPECTED PLUME LENGTH AND FREQUENCY OF OCCURRENCE FOR 16 COMPASS POINT SECTORS (ALL TEMPERATURES) MECHANICAL DRAFT COOLING TOWERS SEQUOYAH NUCLEAR PLANT SITE

* Example: 0.5 percent of the days (2 days per year) plumes with lengths ≥ 2.2 miles occur in the 22½° sector north - northeast of site

Percent of total days in a year

Based on daily early morning record
April 1971 – March 1973

Figure 2.6 – 12 EXPECTED PLUME LENGTH AND FREQUENCY OF OCCURRENCE FOR 16 COMPASS POINT SECTORS (AMBIENT TEMPERATURE BELOW FREEZING) MECHANICAL DRAFT COOLING TOWERS SEQUOYAH NUCLEAR PLANT SITE

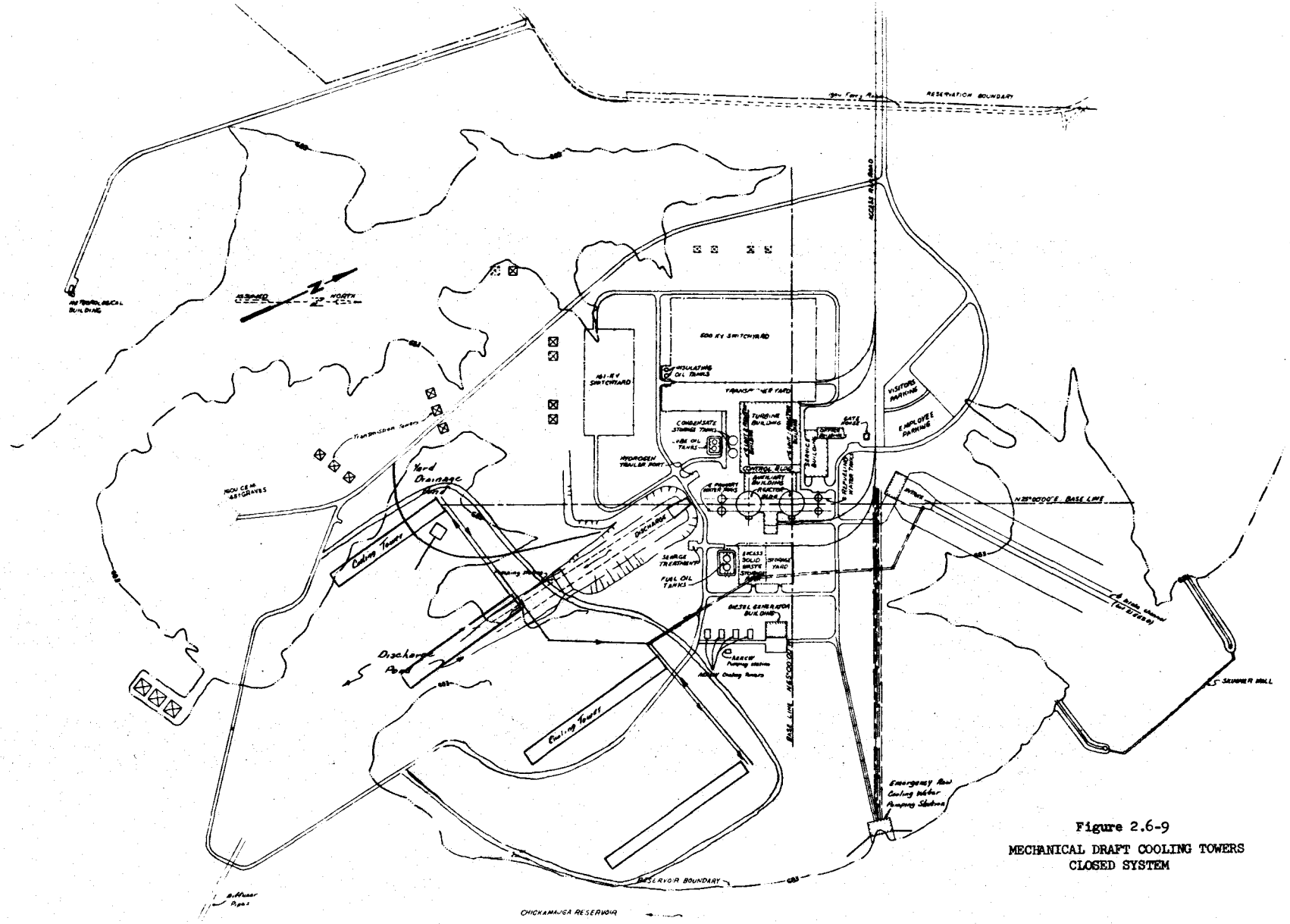

Figure 2.6-9
MECHANICAL DRAFT COOLING TOWERS
CLOSED SYSTEM

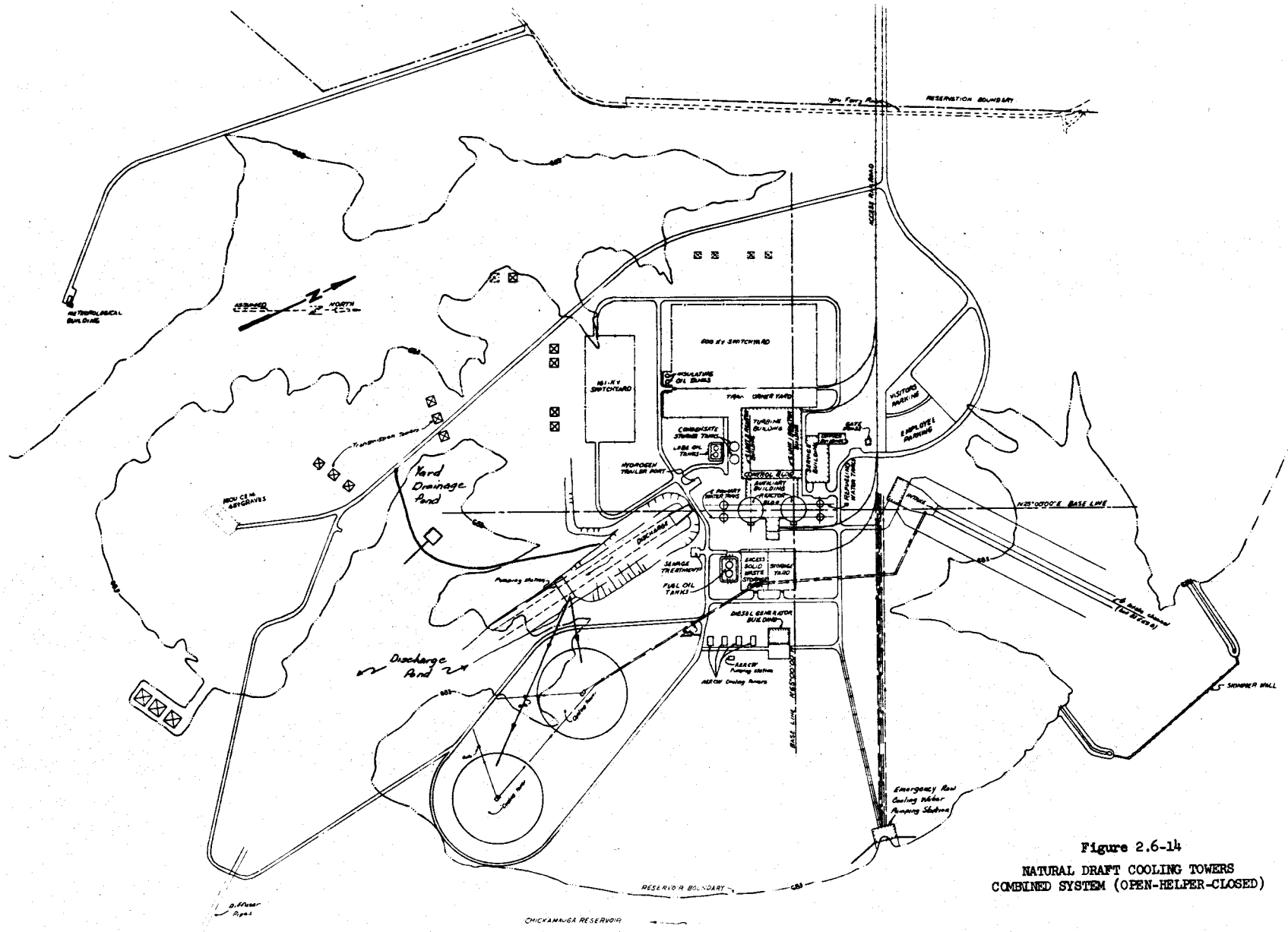

Figure 2.6-14

NATURAL DRAFT COOLING TOWERS
COMBINED SYSTEM (OPEN-HELPER-CLOSED)

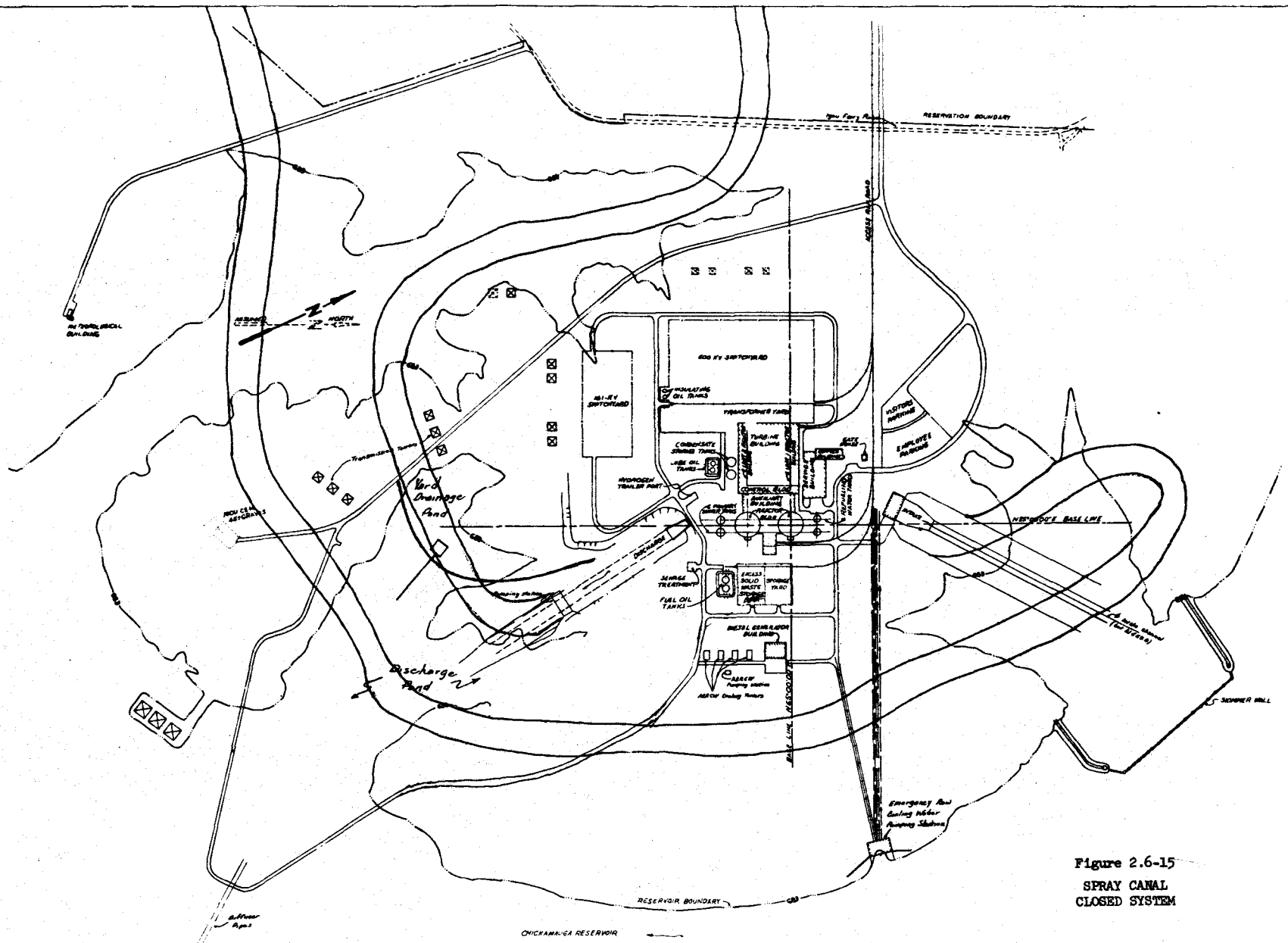

Figure 2.6-15

SPRAY CANAL
CLOSED SYSTEM

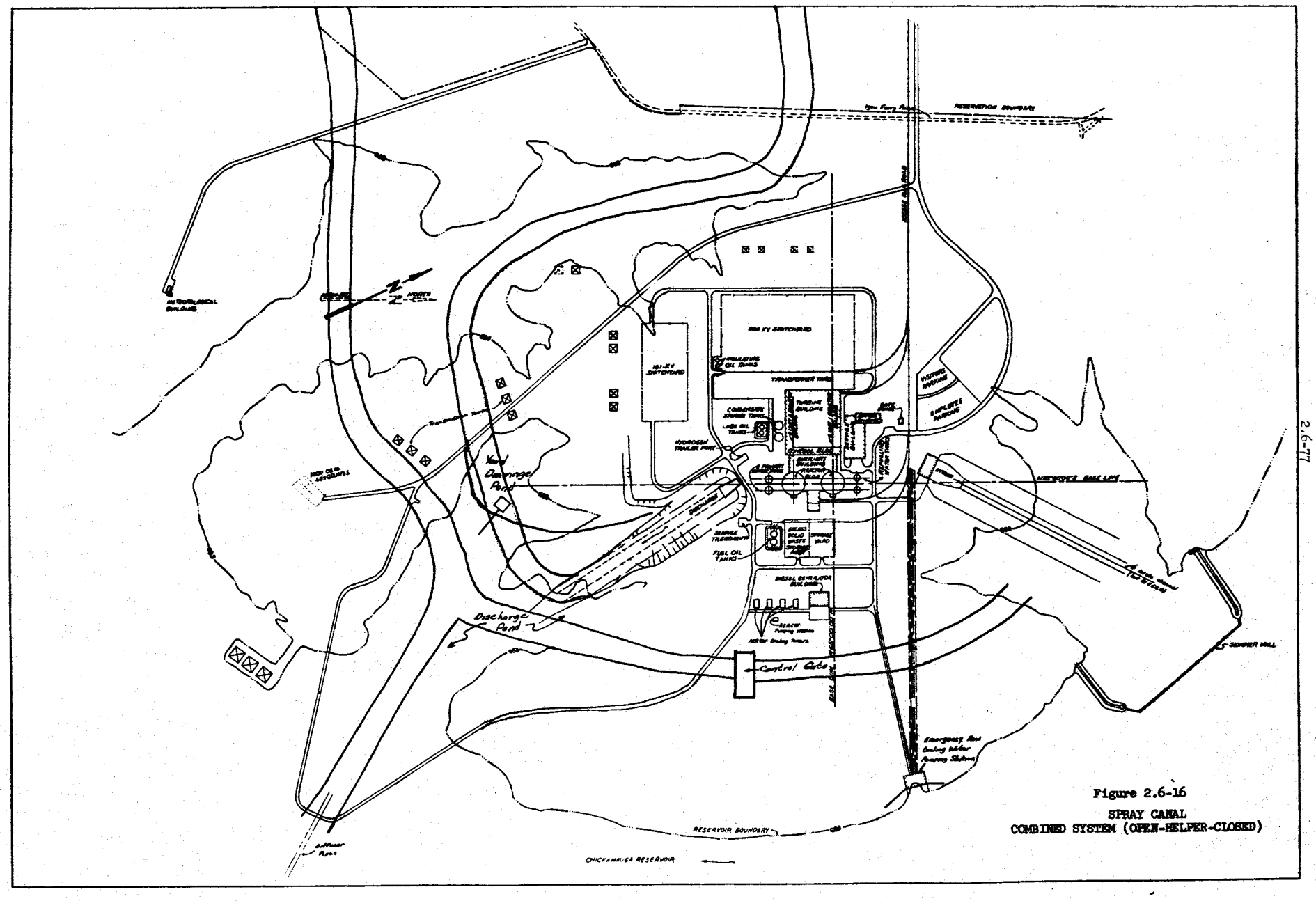

Figure 2.6-16

SPRAY CANAL
COMBINED SYSTEM (OPEN-HELPER-CLOSED)

* Example: 0.5 percent of the days (2 days per year) plumes with lengths ≥ 2 miles occur in the 22½° sector west of site

Percent of total days in a year

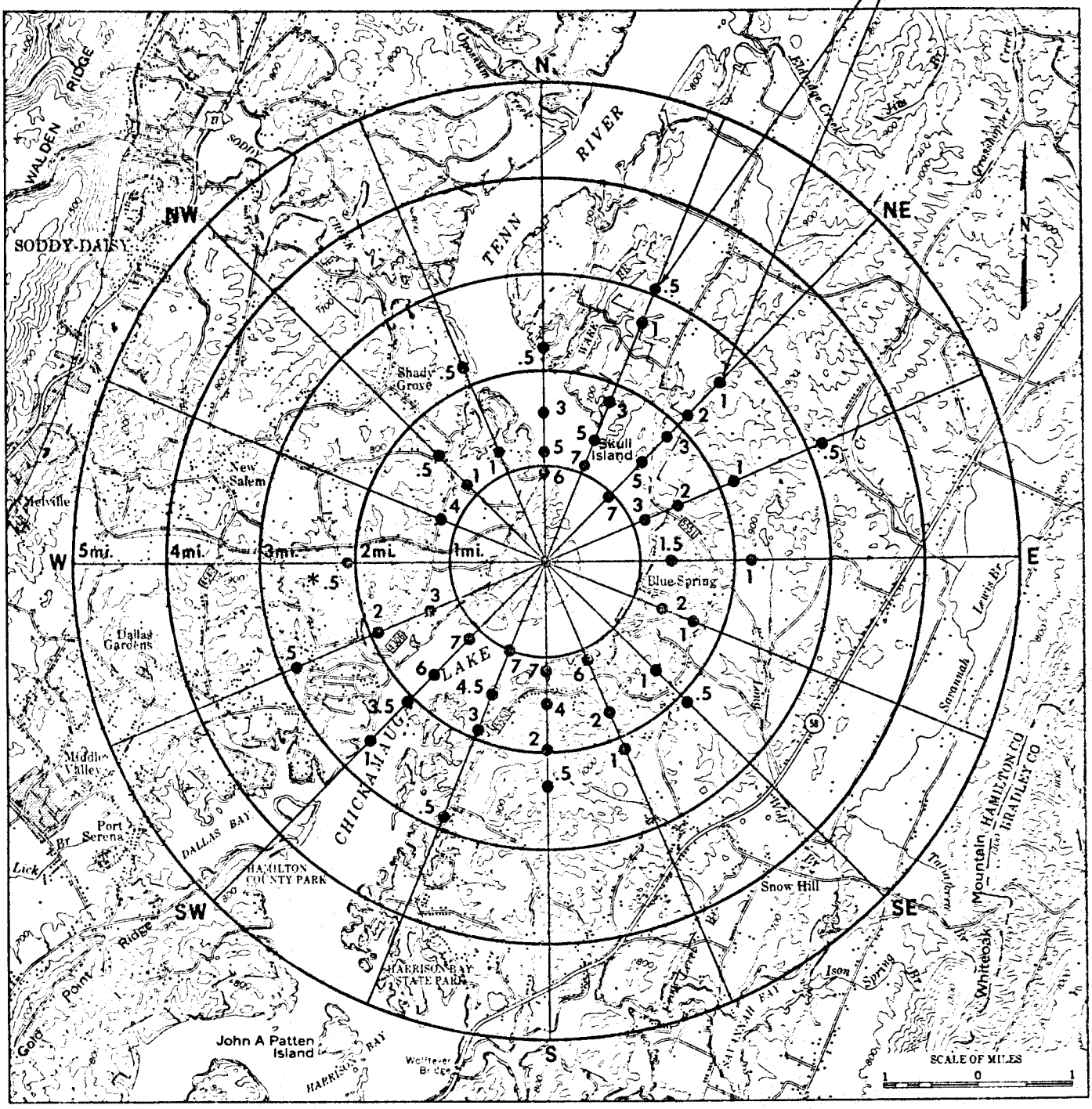

Based on daily early morning record
April 1971 – March 1973

Figure 2.6 – 17 EXPECTED PLUME LENGTH AND FREQUENCY OF OCCURRENCE FOR 16 COMPASS POINT SECTORS (ALL TEMPERATURES) SPRAY CANAL SEQUOYAH NUCLEAR PLANT

*** Example: 0.5 percent of the days(2 days per year)**
plumes with lengths ≥ 2 miles
occur in the 22½° sector west - southwest of site

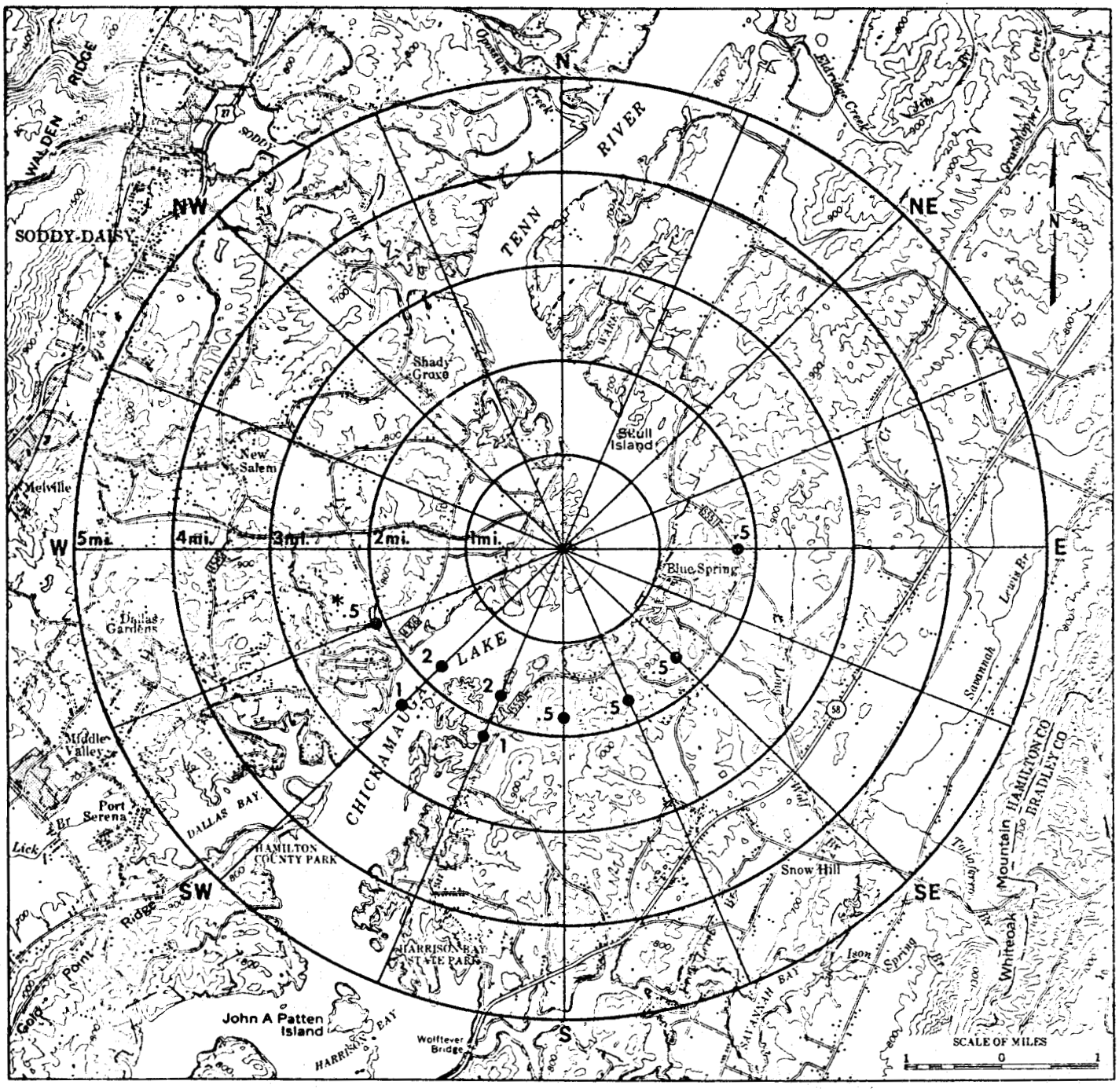

Based on daily early morning record
April 1971 – March 1973

Figure 2.6 – 18 EXPECTED PLUME LENGTH AND FREQUENCY OF OCCURRENCE
FOR 16 COMPASS POINT SECTORS
(AMBIENT TEMPERATURE BELOW FREEZING)
SPRAY CANAL
SEQUOYAH NUCLEAR PLANT

2.7 Construction Effects -

1. General construction considerations - Those construction activities permitted at the site by 10 CFR Part 50.10(b) prior to issuance of a construction permit began in April 1969. Initial work at the site centered around three main categories of construction activities: (1) clearing and general grading of the site; (2) construction of the "construction plant facilities," which include various shop needs, warehousing facilities, utility services, concrete mixing plant, administration buildings, roads, railroads, etc.; and (3) excavation of earth and rock in the area of the main powerhouse complex and foundation preparation for seismic critical structures. The foundation preparation consisted of a 2-stage grout program for the two reactor buildings, the auxiliary building, and the control building.

Construction activities at the site have been planned and conducted to minimize undesirable effects, such as accumulation of scrap materials, burning of cleared brush and trash, and silting of the reservoir. There was a considerable amount of timber and brush cleared from the site (see Appendix C); air pollution resulting from the burning of this material was held to a minimum by short-duration burning on selected days. Special efforts are made to minimize normal trash-burning requirements throughout the construction program.

Grading will provide and maintain a controlled surface drainage system to avoid erosion and resultant silting of the reservoir. Special tank trucks equipped with sprinkler equipment will control dust.

Construction effects associated with offsite transmission facilities are discussed in section 2.2.

Following completion of the plant, temporary construction facilities will be dismantled and disposed of by shipping to other TVA projects or by sale. The total construction area will be graded and landscaped.

2. Yard drainage and discharge ponds - An existing embayment immediately downstream of the plant has been diked off from the reservoir and will be used for two purposes--a 5-acre yard-drainage holding pond in the upper end of the embayment and a 32-acre condenser discharge pond in the lower end. Construction activities in the pond area will probably prevent any significant redevelopment of aquatic life during the construction period. The riprapped dike will remove some substrate and will produce others of distinctly different nature, possibly producing more substrate surface and affording additional variety to the site.

Construction of the yard-drainage holding pond and the discharge pond will result in the irretrievable loss of a 48-acre cove of Chickamauga Reservoir. Prior to the closure of this embayment all fish were removed from a 25-acre portion of the cove. All fish were sorted to species and placed in the size groups listed in Table 2.7-1. Table 2.7-2 is the total number of fish removed from the 25-acre portion of the cove.

Also included (Table 2.7-2) are individual and total values of the fish removed from the cove. The individual values are those that would be charged a water polluter causing a fish kill. These values originated with the Pollution Committee of the Southern Division of the American Fisheries Society, were accepted by the Tennessee Game and Fish

Commission in October 1970, and have recently been accepted by the Tennessee Water Quality Control Board. The total value assigned to all fish removed from the 25-acre cove is $11,925.09 or $477.00 per acre. The total value of the entire 48-acre cove, therefore, is calculated as $22,896.17.

The total value of the 48-acre cove represents the value of the standing crop, i.e., the value of the fish at one point in time. The underlying basis for the value of the individual fish is the replacement cost; that amount of money it would take to put a comparable fish (species and size) back into a depopulated area. Diking off the cove, however, means that the productive capacity of the cove is lost. Additional value, therefore, must be assigned to the cove's "ability" to produce fish. This additional value is assessed throughout the time period that the cove is unable to produce fish. In Chickamauga Reservoir the annual production is roughly 100 percent of the standing crop. This means that if all fish were removed and the 48-acre cove were restocked with small fish, it would take approximately 1 year for the weight of all fish to reach the former standing crop. This is not to say that a 5-pound bass can be produced in 1 year. It does say that after removing 276 pounds of largemouth bass (Table 2.7-2) and restocking with one pound of fingerling bass, it will take 1 year for 275 additional pounds of bass to be produced.

It should be noted that the annual production figure of 100 percent of standing crop is somewhat arbitrary. The range of values is probably from 80 percent to something in excess of 100 percent. However, since this particular cove is more productive than most of

Chickamauga Reservoir (for comparison see Table B-2), the 100 percent figure is considered to be a reasonable estimate.

Using the 100 percent figure and assuming the cove will be out of production for 42 years (preoperation, operation, and postoperation of plant), the total present value of keeping the cove out of production is $320,000. Following termination of Sequoyah plant operations, the dikes could be removed and the cove could be returned to fish production, assuming that the habitat has not been changed.

Based on data collected at Wheeler Reservoir, a surface acre of water was worth $9.16 per year in terms of commercial and sport fish harvest. Assuming that the cove at Chickamauga Reservoir is one-third as productive as Wheeler Reservoir, a yearly production per acre of $3.05 worth of commercial and sport fishing harvest is expected from the cove at the Sequoyah site. This is roughly 1 percent of the value of the yearly production of the cove.

3. <u>The diffusers and the underwater dam</u> - The diffusers described in section 2.6 will be located on a fill placed across the right overbank and on the bottom of the main channel across 700 feet of the 900-foot-wide channel. This fill will permanently cover an area 700 feet by 131 feet and will be approximately 250 feet downstream of a submerged dam which will cover permanently an area 900 feet by approximately 90 feet in the old river channel. The fill material will be crushed rock for the diffuser pipe and quarry-run rock for the submerged dam, both of which will be placed by bottom-dump barges or by clamshell. These fills will afford a new variety of substrate and possible micro habitats, but are expected to reduce biological populations

to an extent greater than they promote development of new population. However, the reverse could be true if the faces are colonized by Asiatic clams, certain midges, or caddisflies.

4. Siltation effects and control - Clearing, site development, and construction required the stripping and continual exposure of several hundred acres of land in an area that normally receives some 55 to 60 inches of rainfall a year. However, grading is being used to provide and maintain a controlled surface drainage system to reduce erosion and resulting silting in the reservoir. Realizing the importance of minimizing siltation effects in the reservoir during construction, TVA is using other control measures including ditching to control runoff and use of dikes, settling ponds, jute mesh, riprap, paving, temporary grassing, and other techniques when considered advantageous. Although some localized siltation is unavoidable, it is not of sufficient proportions or located with respect to the navigation channel such that any significant resuspension will occur from river traffic.

Construction of the skimmer wall required some hydraulic dredging at the site. The dredge discharge was piped and deposited behind a riprapped retainer dike placed across the mouth of a slough. Approximately 5 acres behind the retainer dike was used to deposit the spoil material. Use of rockfill for skimmer wall dike construction reduced the amount of siltation over that which would occur if earthen dikes were used.

The intake skimmer wall is being built between two dikes placed on the right overbank of the reservoir and tied into the

shoreline of an embayment. Hydraulic dredging and development of the dike and intake pump station by heavy earth-moving equipment will disturb several acres of the right overbank and will permanently eliminate them as natural substrates for most forms of small aquatic life. The embayment benthic fauna and flora will also be lost due to actual dike and intake skimmer wall construction and due to site development exposing the land to erosion that, during construction, cannot be prevented. The total area affected will exceed the 35 acres of overbank and embayment enclosed by the dikes and skimmer wall at elevation 683. The additional acreage affected will include that buried by the dikes, that excavated along the channel, and that disturbed by placement of the dikes and subjected to sedimentation during construction.

Excavation of the intake and discharge channels for the condenser cooling water system involves dredge or dragline operations. These activities are being conducted behind a dike which will be removed later. Silting in the reservoir will be minimized although a certain amount of turbidity and silting is an unavoidable consequence of such operations. During intake channel excavation a natural dike will be formed by leaving a section at the reservoir end undisturbed. Consequently, significant siltation should not occur. The excavation area will be flooded when work is completed to equalize the water levels. Careful removal of the temporary dike will then be undertaken under balanced head conditions with shaping of the banks to prevent appreciable siltation. Spoil from removal operations will be disposed of in an upland fill area so that no silting of consequence will result. The discharge channel and discharge pond excavation and discharge pond earthen dike placement were

done in the dry behind a rockfill dike. Again, careful removal of the dike under balanced head conditions should result in only localized siltation, and spoil from removal operations will be handled in a manner similar to that for the intake channel.

The shaping of the embayment and overbank bottom to improve the hydraulics of flow drawn into the intake will further disrupt the benthic substrate's structure, texture, and resident organisms. After the area stabilizes, relatively immobile and/or attached resident forms should develop with perhaps some enhancement of overbank types resulting from stronger continual flows, drawn by the pumps, providing entrained particulate food and providing stable new substrate types.

The adjacent right bank shoreline was developed as a docking point with backfilling on the landward side and dredging on the river side to allow towboats to reach the docking area. The construction directly affected the aquatic life of the embayment by disturbing the shoreline substrates through dredging, pile driving, and shoreline clearing of natural materials and substituting rock, wood, and steel substrates along the shore, and silt in the new channel. The propeller wash of an occasional towboat positioning a barge creates heavy wave wash, extreme turbidity, new sedimentation, and resuspension of benthic materials and exposed organisms.

The yard drainage pond and its dike were built in the dry behind the discharge pond dike and little silting occurred.

The submerged dam and diffuser pipe fill will be constructed of quarry-run rock and crushed, graded rock, respectively,

which will cause less turbidity than using earth or unclassified fill material. Only localized disturbance of existing silt is anticipated.

The Savannah Utility District water supply intake will be relocated to a position to minimize the potential for entrainment of plant effluent in the intake. A 16-inch diameter ball-joint pipe resting on the bottom of the reservoir will be used to relocate the intake. Present plans are to assemble the pipe on barges and lower it to the reservoir floor. No excavation or fill is anticipated for the line so that the only siltation effects would be those caused by temporary disturbance of existing silt. These effects are expected to be localized and of little consequence. Any excavation which might be required at the tie-in with the existing intake should be minor with only localized silting effects.

The only grading adjacent to the river was that for the construction dock and barge slip. Siltation caused by this was localized and of minor proportions.

Sites for deposition of dredging spoil were selected by project construction personnel and coordinated within TVA. Retainer or containment dikes were provided with overflow pipes which were extended vertically as the spoil area filled so that ponding and settling out of sediment occurred before the runoff was discharged to the reservoir. These areas will be final graded, shaped, planted in trees, and grassed.

Landscaping of the plant area will be started as soon as practicable after construction is substantially completed. Soil erosion control measures are being done concurrent with the construction operations where possible.

5. Solid waste - Some of the solid waste generated by land clearance was disposed of by controlled burning. Burning was held to a minimum by utilizing as much of the timber as possible for construction purposes and by burying the stumps. All burning of solid wastes is carried out by short-duration burning on selected days and coordinated with the Chattanooga-Hamilton County Air Pollution Control Bureau. TVA is continually considering and, where feasible, using alternatives to burning as a means of disposing of land clearing and other solid wastes. Some of the refuse from project construction is being collected by a private contractor and deposited in a sanitary landfill meeting state regulations. The considerations made for disposing of solid wastes from the plant (section 2.9) will be followed in determining the ultimate disposal of these construction wastes.

6. Sanitary wastes - Temporary sewage treatment plants capable of handling the peak construction force sewage load have been installed and are operated to meet applicable standards. NPDES permit applications for these treatment plants were filed with the EPA Region IV Office April 16, 1973.

In addition, chemical toilets are used in isolated or remote areas during the construction period.

7. Chemical cleaning - Chemical cleaning operations prior to unit startup will be conducted to minimize releases to the reservoir and to ensure that any chemicals released have been neutralized and diluted to concentrations which are acceptable for discharge into the reservoir. Procedures for chemical cleaning are not final, but much of the piping is being purchased to final cleanliness requirements.

Prior to startup or initial operation, systems will be thoroughly flushed--first with a weak solution of trisodium phosphate to remove grease, oil, or similar contaminants, and any loose matter; and then given a final flush with filtered or demineralized water. The flush water will be discharged to holding ponds, probably within the yard drainage pond, for further dilution and treatment to reduce any objectionable constituents to concentrations which are acceptable for discharge into the reservoir. The amounts of chemicals required cannot be determined until the cleanliness criteria are set. All chemical discharges will be treated to meet applicable water quality standards prior to release to Chickamauga Reservoir.

8. Noise abatement - Noise abatement is of primary concern to the construction effort. Construction operations will be conducted in such a manner as to minimize community disturbance. Rock blasting is done in daylight hours only. Vehicles are equipped with standard mufflers. A central air compressor plant is located at a sufficient distance from private residences to avoid excessive noise. All activities and operations will be in full compliance with the applicable provisions of the Federal Noise Control Bill. The TVA Hazard Control Branch conducts surveillance activities and ensures compliance with applicable noise standards.

9. Miscellaneous - In addition to those considerations already discussed, the following miscellaneous effects have been identified.

Potable water is obtained from the Hixson Utility District. The utility district's existing water main in the vicinity

of the plant was increased in size and extended approximately 3-1/2 miles by contract to provide this service. The water is distributed throughout the construction plant area by either a piping system or by insulated containers specially made for dispensing drinking water. These facilities are regularly checked by a random sampling technique by TVA's Division of Environmental Planning.

Raw water for construction needs in fire protection, equipment cooling, and other services is pumped from the reservoir, using a temporary pumping station located slightly offshore near the plant site.

A small river docking facility for handling barge traffic into and out of the plant has been provided. Only minor interference with recreational and commercial navigation is anticipated when barges are at the dock. Less than 100 barges are expected during construction, none of which will be oil or fuel barges. However, during normal operations, small amounts of oil and fuel will be lost from the tows which will accumulate along the shoreline or on the bottom materials and organisms in the docking area or downstream. The magnitude of such loss would be insignificant.

Some repairs have been required on access roads to the construction area due to abnormal use during the construction program. Responsibility for repair has been coordinated with TVA, Hamilton County officials, and the materials contractor.

All new construction equipment purchased for the project is equipped and maintained in compliance with applicable regulations to reduce air pollution. Exhaust dust from the concrete mixing

plant weigh bin is controlled by water spray. Aggregate piles are wet down and the aggregates washed en route to the mixing plant which virtually eliminates dust. Wastes discharged from the sprayers and rinsing screens are piped to a settling pond. Suitable tailings are reclaimed and used for construction purposes.

Table 2.7-1

SIZE CLASSES* USED IN 1971 FISH INVENTORIES

Species	Young-of-year	Intermediate	Harvestable
	length in inches		
Game			
Walleye	1-8	9-11	12 and over
Sauger	1-8	9-11	12 and over
Largemouth bass	1-4	5-9	10 and over
Smallmouth bass	1-4	5-8	9 and over
White bass	1-6	7-8	9 and over
Rock bass	1-3	4-5	6 and over
White crappie	1-3	4-7	8 and over
Black crappie	1-3	4-7	8 and over
Bluegill	1-3	4-5	6 and over
Other sunfishes	1-3	4-5	6 and over
Rainbow trout	1-6	-	7 and over
Yellow perch	1-6	-	7 and over
Rough			
Gar	1-12	13-19	20 and over
Mooneye	1-6	7-11	12 and over
Skipjack herring	1-6	7-11	12 and over
Blue catfish	1-5	6-9	10 and over
Channel catfish	1-5	6-9	10 and over
Flathead catfish	1-5	6-11	12 and over
Bullhead	1-4	5-7	8 and over
Carp	1-8	9-12	13 and over
Carpsuckers	1-7	8-10	11 and over
Redhorses	1-7	8-10	11 and over
Other suckers	1-7	8-10	11 and over
Drum	1-5	6-8	9 and over
Forage**			
Threadfin shad	1-5	-	6 and over
Gizzard shad	1-5	-	6 and over
Mis. forage fishes	-	-	-

Subsamples: Mixed threadfin and gizzard shad (5 inches and less) - 3 pounds
Mixed species other than shad (3 inches and less) - 3 pounds
Sorted individual species (3 inches and less) - 1 pound

* The size class divisions for each species are arbitrary but based on knowledge of growth rates and information from creel census and commercial harvest records.

** Shad were recorded either as young-of-year or adult; sizes of other forage fish were not differentiated.

Table 2.7-2

ROTENONE SAMPLE OF 25-ACRE COVE ON SEQUOYAH NUCLEAR PLANT SITE--AUGUST 1971

	Young-of-Year			Intermediate			Harvestable		
	Number of Fish	Cost Per Fish	Total Cost	Number of Fish	Cost Per Fish	Total Cost	Number of Fish	Cost Per Fish	Total Cost
Yellow perch	-	-	$ -	10	.30	$ 3.00	35	.45	$ 15.75
Largemouth bass	2,253	.35	788.55	12	1.00	12.00	276*	2.50**	690.00
Spotted bass	809	.75	606.75	-	-	-	-	-	-
White bass	-	-	-	387	.65	251.55	-	-	-
Yellow bass	35	.30	10.50	73	.65	47.45	-	-	-
White Crappie	1,865	.15	279.75	1,594	.50	797.00	787	1.00	787.00
Bluegill	11,320	.15	1,698.00	5,006	.30	1,501.80	981	1.00	981.00
Longear sunfish	6	.15	.90	167	.30	50.10	-	-	-
Redear sunfish	35	.15	5.25	414	.30	124.20	183	1.00	183.00
Warmouth	1	.15	.15	2	.30	.60	-	-	-
Channel catfish	644	.04	25.76	246	.15	36.90	553	.35	193.55
Blue catfish	915	.04	36.60	-	-	-	526	.35	184.10
Flathead catfish	282	.04	11.28	3	.20	.60	19*	.35*	6.65
Drum	1,443	.05	72.15	2,727	.15	408.75	2,370	.25	592.50
Smallmouth buffalo	-	-	-	-	-	-	1,237*	.25*	309.25
Black buffalo	-	-	-	-	-	-	9*	.25*	2.25
Carp	-	-	-	-	-	-	519*	.20*	103.80
Carpsucker	-	-	-	-	-	-	6*	.15*	.90
Spottedsucker	-	-	-	-	-	-	1	.30	.30
Golden redhorse	-	-	-	-	-	-	1	.30	.30
Spotted gar	-	-	-	-	-	-	15*	.25*	3.75
Longnose gar	-	-	-	-	-	-	7*	.25*	1.75
Shortnose gar	-	-	-	-	-	-	863*	.25*	215.75
Skipjack	70	.04	2.80	-	-	-	-	-	-
Gizzard shad	8,097	.02	161.94	-	-	-	10,543	.06	632.58
Misc. forage	2,886	.03	86.58	-	-	-	-	-	-
Total value			$3,786.96			$3,233.95			$4,904.18
Total value (all size classes)						$11,925.09			

* Total pounds.

** Price per pound.

2.8 Socioeconomic Impact - Construction of the Sequoyah Nuclear Plant is having temporary socioeconomic impacts on the surrounding area due to construction employees who have moved into the area. In addition, some impacts will result from employees who move into the area to supervise, operate, and maintain the plant and to operate the power plant training center.

1. Construction employment impact - Two surveys of construction employees have been conducted to determine the number of workers who have moved into the area, where they live, general information on their choice of housing, and general family characteristics. The first survey was conducted in October 1970 when the construction employment level was about 1,100 employees. The results of this survey provided the basis for the estimates of peak impacts which were contained in the draft environmental statement.

The second survey[1] was conducted at the peak employment level in July 1972 when there were about 2,200 construction employees. About 1,500 employees provided usable responses to the survey. The various percentages for responses obtained from this sample were applied to the total number of employees to provide estimated results for the entire work force. This assumes that the survey sample accurately reflects the situation of the total work force. It is possible that bias is introduced due to non-response, but there is no obvious reason to expect non-respondents as a group to differ significantly from that portion of the work force which returned questionnaries.

At the construction peak about 1,700 workers were originally from the area and about 500 workers had moved into the area. Nearly one-half of the moving workers, 220, were living in or around nearby Soddy-Daisy. Hixson absorbed an additional 110 employees while

Chattanooga itself attracted 75 employees. Each of the additional 23 towns reported by respondents had 15 or fewer employees who had moved (based upon extrapolated data). Table 2.8-1 summarizes the locations of employee residences as listed in the completed surveys.

The major area affected is in the Hamilton County, Tennessee, area. While the impacts are not significant, the following discussions detail the impacts due to peak employment in this area.

(1) Population impact - The 1970 population of Hamilton County was 254,236. Community populations were: Soddy-Daisy, 7,569; Hixson, 6,188; and Chattanooga, 119,082. There was a total construction plant population influx of approximately 1,230 people (340 children, 140 single men, and 375 couples). Thus, the increase in the county population was minor (0.5 percent increase). Assuming the distribution of the total population was the same as the employee distribution (constant ratio of single men to family men and children to families), the Soddy-Daisy area absorbed about 530 people, Hixson received about 280 people, and Chattanooga received about 180 people. The percentage population increases were 7.0 percent. 4.5 percent, and 0.15 percent respectively.

Due in large measure to the large population base already in Hamilton County, there have been no identifiable impacts on commercial establishments and services.

(2) Impact on schools - Recent data for the Hamilton County and Chattanooga city school systems show that about 550 children are enrolled who have a parent (or parents) who works at the project. However, based on TVA's July 1972 survey, only an estimated 276 school-age children accompanied moving employees. These children would be distributed among all of the towns where movers located. The

major number of children added would be to the Soddy-Daisy and Hixson areas. These areas have experienced substantial growth over the last decade and the Hamilton County School System (recent enrollment in schools within 10 miles of the site, 11,000 students) has made adjustments to school growth projections, particularly in the Hixson area. The rate of growth of the school enrollment is much more than could be accounted for based solely on influx of children of Sequoyah construction workers.

(3) Impact on economy; personal income - In 1970, personal income in Hamilton County totaled an estimated $942,000,000.[2] An average annual wage of about $12,000 was earned by the 500 workers moving into the area which totals $6,000,000. This represents an increase of about 0.6 percent. This level of increase, spread as it would be among the various goods and services available in Hamilton County, is well within the capability of existing establishments to handle without expansion or increase in personnel.

(4) Impact on economy; wholesale trade - Wholesale trade in Hamilton County totaled approximately $760,097,000 in 1967.[3] Local purchases of goods and services for construction of the plant have been on the average about $250,000 per year. This is an increase of 0.03 percent which is of economic benefit to the specific local businesses affected but not of any significance to the economy in general.

(5) Impact on housing - Table 2.8-2 presents various data on vacant housing in the Sequoyah area. The values in the table give an indication of the actual housing that was available. Data are shown for all vacant dwelling units and those vacant dwelling units which have complete plumbing. Plumbing is used as an indicator of housing quality because the 1970 census did not include this evaluation.

A substantial proportion of the vacant dwelling units is in the category "Other" which means they are not on the market for various reasons. The range is from about 10 percent in Hixson (9 out of 94) to nearly 50 percent in Soddy-Daisy (62 out of 131). Since these units would not be available to a prospective tenant, only those dwelling units for rent or for sale are discussed further.

There are relatively few dwellings available for rent or sale in the Soddy-Daisy area, but it apparently has not hindered the location of many workers in and around the community. This may account for the larger proportion of workers living in mobile homes than at other comparable construction projects.

The construction employees living in mobile homes were 38 percent in 1970 and 45 percent in 1972. The distribution of these mobile homes is not known, but it is expected that a large proportion were in the Soddy-Daisy area. In the 1970 census, 8.9 percent of Soddy-Daisy's dwelling units were mobile homes. This is more than twice the Tennessee Valley region rate (4.1 percent) and nearly three times the Hamilton County rate (2.9 percent). However, there was apparently a trend in this direction even without construction of the plant. The 222 mobile homes in Soddy-Daisy in 1970 were counted at a time when there would have been a total of less than 70 mobile homes occupied by employees who had moved into the area. Thus, even assuming all of the construction-related mobile homes were located in Soddy-Daisy the mobile home rate exclusive of construction employee impact would still have been 6.1 percent. This indicates that as the

project moves toward completion and workers leave there is likely to be a demand for the mobile home facilities which were developed to accommodate them.

(6) Impacts on traffic - Traffic counts on county roads in the vicinity of the Sequoyah plant have shown a general pattern of increase from 1970 through 1972; however, no definite pattern exists for all roads. To mitigate the effects of the increased traffic as a result of the Sequoyah plant, TVA has provided for local county road repairs and for the construction of a new dual-lane access road connecting the plant area to U.S. Highway 27 at Soddy-Daisy. This road was opened to traffic in the winter of 1972-73. The impacts of constructing this road are discussed in section 2.7.

2. Permanent employment impact - Various factors require that permanent operating personnel be onsite during the last half of the construction phase of the plant. The permanent supervisory, operational, and maintenance work force will eventually stabilize at around 250 people. It is expected that these permanent employees will all be employed about 2 years before the estimated completion of construction. Their impact on the area will be in addition to that of the construction employees. Although this will place an additional demand on the services of the area, it will also provide an economic stimulus. At current salary scales, the combined work force can be expected to have an annual payroll of about $3 million.

There are no previous surveys to provide a basis for estimating permanent employee housing choice, family size, or family composition. However, it should be noted that this group could

be expected to choose a place to live on a somewhat different basis than construction workers. Whereas construction personnel may be willing to sacrifice urban services and convenience due to the relatively short time they will be living in the area, permanent employees will be more reluctant to do so. In addition to housing, they will be looking for good schools, adequate medical facilities, and convenient shopping.

REFERENCES FOR SECTION 2.8

1. Tennessee Valley Authority, Division of Navigation Development and Regional Studies. Construction Employment Impact - Sequoyah Nuclear Plant, February 1973.

2. "Estimates of Total and Per Capita Personal Income for Tennessee - Selected Years 1959 to 1970," George Kronbach, Center for Business and Economic Research, University of Tennessee, Knoxville, Tennessee.

3. "U.S. Bureau of Census, Census of Business, 1967 - Wholesale Trade: Tennessee, BC67-WA44," U.S. Government Printing Office, Washington, DC, 1969.

Table 2.8-1

CONSTRUCTION EMPLOYMENT RESIDENCE BY TOWN OR CITY

SEQUOYAH NUCLEAR PLANT - JULY 1972

Town or City	Moved to Town	Already Living in Town	Total	1970 Population
Chattanooga, TN	49	280	329	119,082
Hixson, TN	76	78	154	6,188
Red Bank, TN	10	6	16	12,715
Soddy-Daisy, TN	145	139	284	7,569
Subtotal	280	503	783	
Athens, TN	0	6	6	11,790
Bakewell, TN	5	8	13	NA
Cleveland, TN	3	26	29	20,651
Clinton, TN	0	11	11	4,794
Dayton, TN	5	55	60	4,361
Decatur, TN	2	13	15	698
Dunlap, TN	0	13	13	1,672
East Ridge, TN	3	4	7	21,799
Etowah, TN	0	7	7	3,736
Evensville, TN	2	8	10	NA
Graysville, TN	3	8	11	951
Harriman, TN	1	12	13	8,734
Jasper, TN	1	28	29	1,931
Kingston, TN	0	9	9	4,142
Knoxville, TN	0	17	17	174,587
Oliver Springs, TN	0	13	13	3,405
Ooltewah, TN	1	11	12	NA
Palmer, TN	0	13	13	898
Pikeville, TN	1	9	10	1,454
Sale Creek, TN	2	6	8	NA
South Pittsburg, TN	0	25	25	3,613
Spring City, TN	5	18	23	1,746
Ten Mile, TN	0	7	7	NA
Tracy City, TN	2	11	13	1,388
Tullahoma, TN	0	7	7	15,311
Whitwell, TN	1	20	21	NA
Bridgeport, AL	1	14	15	2,908
Bryant, AL	1	8	9	NA
Dutton, AL	2	5	7	423
Rainsville, AL	1	11	12	2,099
Scottsboro, AL	0	14	14	9,324
Section, AL	0	14	14	702
Chickamauga, GA	2	7	9	1,842
Fort Oglethorpe, GA	0	6	6	3,869
Ringgold, GA	1	9	10	1,381
Rossville, GA	3	30	33	3,957
Subtotal	48	483	531	
Other	16	147	163	
TOTAL	344	1,133	1,477	

NA - Information not available - unincorporated town under 1,000 population, not listed separately in the 1970 census.

Table 2.8-2

Sequoyah Nuclear Plant

Housing Vacancy Information[a]

Hamilton County and Selected Communities

	For Rent	For Sale	Other[b]	Total
Hamilton County				
Number	2,538	772	1,750	5,060
Average Value or Monthly Rent	$81(2,504)[c]	$18,000(720)[c]	-	-
With all Plumbing	2,411	734	1,460	4,605
Chattanooga				
Number	1,856	275	760	2,891
Average Value or Monthly Rent	$71(1,851)[c]	$10,900(241)[c]	-	-
With all Plumbing	1,778	265	711	2,754
Hixson				
Number	62	23	9	94
Average Value or Monthly Rent	$129(62)[c]	$25,000(21)[c]	-	-
With all Plumbing	62	23	9	94
Soddy-Daisy				
Number	52	17	62	131
Average Value or Monthly Rent	$39(51)[c]	$7,600(15)[c]	-	-
With all Plumbing	47	12	40	99

a. The source is the 1970 Census of Housing. This data covers vacant dwelling units suitable for year-round occupancy. Vacant seasonal dwelling units are excluded.

b. Includes housing units: (1) sold or rented but awaiting occupancy; (2) held for occasional use; or (3) not on the market for some other reason, e.g., awaiting settlement of an estate, or personal reasons of owner.

c. Average value or rent is based on this number of dwelling units. Value is tabulated only for vacant-for-sale 1-family houses which are on a place of less than 10 acres and have no business or medical office on the property. Value is not tabulated for mobile homes, trailers, cooperatives, and condominiums. Rent is tabulated for all vacant-for-rent units except 1-family houses on a place of 10 acres or more.

2.9 Other Impacts - The following potential environmental impacts have been considered in addition to those discussed elsewhere in this document.

1. Land use compatibility - The major impact on land will be the conversion of approximately 525 acres of land from rural nonfarm or agricultural use to industrial use. While this is a significant change in land use of the site itself, there are no anticipated affects from routine plant operation which would prohibit attaining full use of the surrounding land.

The plant will have no adverse impact on existing or future industrial or agricultural operations in the area. Forestry activities will not suffer any significant adverse impact. The only effect on forestry has been the loss of potential forest products due to the localized clearing required for construction.

Rail and highway access to the plant site were provided by building a spur from the Southern Railway and a road from U.S. 27. The road was built to standards somewhat above county highways but less than primary highway standards (22-foot surface, 38 feet from shoulder to shoulder). The carrying capacity of the highway is sufficient for the anticipated development of the surrounding land. Thus, there should be no adverse effects on transportation.

Government reservations, as identified in Section 1.2, Environment of the Area, will not be significantly affected by the construction and operation of the plant nor is the project expected to curtail the future development of Government reservations in the region.

Population distribution will be affected only to the extent that no one will be allowed to reside on the plant site.

2. Water use compatibility - Projection of the impact of the facility on the uses of surface and groundwater resources of the region has been undertaken in order to assure that adequate consideration is given to alternate and shared uses of the water and to overall plans for development of the area. The watershed, streamflows, velocities, volumes, and quality characteristics of the water are given in Section 1.2, Environment of the Area, as baseline environmental data. The impact of the nuclear plant on present and projected uses of the water resource are discussed below.

By comparing expected plant water use and the average quantity of water flowing past the site with known and projected industial water uses, it has been determined that the plant will not adversely affect current or potential industrial uses (see sections 1.2, 2.5, and 2.6). Since groundwater movement is from the plant site to the reservoir, presence of the plant will not interfere with industries which, in the future, might take water from groundwater sources.

There are no anticipated significant effects on public water uses as a result of locating the plant in the area. The Savannah Utility District water intake will be relocated to a position to minimize the potential for entrainment of plant effluent in the intake. Compliance with Federal and state standards combined with dilution of plant discharge by reservoir flow will be such that no adverse impact on existing downstream public water uses will occur. Because of the groundwater movements as indicated above, there should be no significant effects on public groundwater uses.

Other industrial and public uses such as water transportation, boating, and fishing will not be significantly affected by the presence of the plant in the area. The plant will have only minimal effects on the chemical and physical characteristics of the reservoir and will not alter the present or projected usage of this portion of the Tennessee River in any way.

As discussed in detail in section 2.4, radiological discharges into the reservoir will be minimal and thermal discharges will be controlled to minimize adverse effects as discussed in section 2.6.

3. Aesthetics - The plant will be located on a broad plain of a peninsula. A wooded area east of the plant will shield much of the plant from view from the river. The peninsula connects with the mainland to the west of the site.

Plant construction plans are coordinated with architectural personnel who route access roads, recommend leaving trees standing in strategic areas as visual screens, and recommend other steps to minimize adverse visual impact. In order to reduce the visual impact of the large facilities, the structures will be grouped in a diminishing progression of scale from the reactor, auxiliary, control, turbine, and service buildings to the office building and gatehouse. The materials will vary to reflect the changes in scale--monolithic concrete for the larger solid masses, lighter fenestration for the turbine building, and precast concrete, brick, and glass for the office building and gatehouse. In addition, the forms will be designed to relate to the function within and careful consideration is given to detail, such as the forms of the intake and exhaust air houses. The hyperbolic

form and concrete materials of natural draft cooling towers will be compatible with the architecture of the main plant and would not require any special aesthetic treatment. The natural draft cooling towers being approximately 500 feet high will probably result in their becoming a landmark on the surrounding terrain. The extensive plumes will increase this effect.

Particular attention will be given to the site development and landscaping. Natural features of the terrain will be preserved as much as possible, and even utilized to reduce the impact of the installation on man and his environment. The landscaping will be designed to provide a recognizable yet harmonious transition between the natural setting and the plant site. The plant design, integrated with the landscape, will create an inviting and pleasant setting for both employees and visitors.

4. Miscellaneous -

(1) Recreation - While recreation is one of the principal public uses of the shoreline and waters of Chickamauga Reservoir, the Sequoyah Nuclear Plant should not have any adverse impact on this use.

The thermal discharges at Sequoyah will be in accordance with applicable standards. These discharges will not adversely affect sport fishing, water contact sports, or other recreational uses of the reservoir. Routine operational releases of radionuclides and chemicals have also been analyzed in the context of their impact on recreational activities and none of these discharges will curtail use of the reservoir for recreation.

TVA is planning unique educational and interpretive facilities for visitors at the Sequoyah plant. These facilities will be the main location for describing TVA's nuclear power program to the public. TVA anticipates that the Sequoyah plant will draw a large number of visitors (estimated to average 150,000 visits per year), and onsite recreation facilities will be provided. These include an overlook and picnic area and visitors' facilities where interpretive devices such as models, pictures, recordings, and movies will be presented. TVA will construct, operate, and maintain the planned facilities which will be ready for use by the public when major project construction is completed. Thus, the project will augment the recreation facilities of the area.

(2) Normal solid waste disposal - Two methods for disposal of solid wastes are being employed during construction. A contractor collects the contents of 21 receptacles (4 cubic yards capacity each) and empties them once a week in a state-approved sanitary landfill. Approximately 5,500 cubic yards per month of solid wastes, such as scrap wood, brush from land clearing, packaging material, etc., are carried to an area on the plant site for burning. Clearance for burning is obtained from the Chattanooga-Hamilton County Air Pollution Control Bureau.

After the plant becomes operational, the nonradioactive solid waste generated at Sequoyah will be disposed of in a sanitary landfill located on TVA land and operated by TVA in accordance with EPA guidelines or in a state-approved sanitary landfill on non-TVA land and operated by a municipality, county, or private contractor.

The characteristics of the nonradioactive solid waste generated at this installation will be paper, soft drink cans, glass, wood, and garbage. The garbage portion will be relatively small in comparison to the quantity of other solid wastes. The scrap metals (other than cans) will be salvaged and sold. Scrap lumber will be salvaged for reuse and made available to scavengers when it no longer can be used by TVA. Residue from the scavenged scrap lumber will be mixed with the other solid waste for disposal in a sanitary landfill. This system will be used during construction and operation of the completed plant.

Economics will determine whether TVA or a private contractor operates the collection and disposal systems. Adequate storage facilities, based on a minimum collection frequency of twice a week, will be provided and transport will be in a closed vehicle or container regardless of which method is utilized. The service provided will be continually monitored by TVA to assure conformance to applicable Federal and state regulations.

(3) Channel siltation - As described in section 2.6, the diffuser section will be laid on fill approximately 12 feet above the riverbed. An underwater dam will be constructed across the main channel approximately 250 feet upstream from the diffusers. A potential exists for local accumulations of inorganic and organic sediments to develop both upstream and downstream of the underwater dam and fill. The possible deposition of organic debris (for example leaf material) adjacent to the underwater structures have been given consideration.

Sediment samples reveal very little organic accumulation anywhere in the main reservoir or in embayment areas other than the stream inflow points. The organic matter deposition behind the underwater structures is not expected to be greater than the deposition of organic sediments in areas of the reservoir not influenced by the flow of the channel.

(4) Archeology - Archeological surveys of the Chickamauga Basin which were conducted many years ago had reported several archeological sites on the plant site. In 1914, C. B. Moore reported a site (40HA22) located on a peninsula below the Igou Cemetery (see figure 1.1-2). A site (40HA20) has also been reported on the upstream side of the intake embayment near river mile 485. A third site (40HA46) has been reported on Denny Bluff across the reservoir from the plant site. In addition, the Igou Cemetery with about 45 graves is located on a hillside across the discharge pond from the plant, and the remnants of an old homesite are located in the area upon which the cooling towers will be built. A TVA land map made in 1935 shows a 2-story frame house at the latter location. An archeological survey of the plant site and adjoining areas was conducted on June 16, 1973, under a personal service contract from TVA to Dr. F. A. Calabrese of the Department of Sociology and Anthropology of the University of Tennessee at Chattanooga. While construction activity was well advanced at the plant site, the survey was made to identify the archeological significance of the site in general and of the undisturbed areas which might later be disturbed by additional construction activity.

Dr. Calabrese reported that sites 40HA20, 40HA22, and 40HA46 have been destroyed, and that the intake and discharge channel areas which have already been cut proved to be void of archeological material. Site 40HA20 is in an area which was disturbed by construction of the intake channel and the docking facility. While site 40HA22 is located in an area where transmission lines have been constructed, aerial photos made subsequent to the first reporting of these sites and before power line construction show this area to have been used for agriculture. Site 40HA46 is in an area adjacent to transmission lines which have been constructed since the site was first recorded, but these construction activities are not believed to have affected this site. Neither the archeological significance nor the cause of the destruction of these sites is known; nevertheless, the sites have been disturbed or have deteriorated to the point that no significant archeological evidence could be obtained.

The Igou Cemetery remains today and is of possible interest, and TVA intends to preserve this cemetery at its present location.

3.0 ADVERSE ENVIRONMENTAL EFFECTS WHICH CANNOT BE AVOIDED

The CEQ Guidelines require a discussion of any probable adverse environmental effects which cannot be avoided, such as water or air pollution, undesirable land use patterns, damage to life systems, urban congestion, threats to health or other consequences adverse to the environmental goals set out in Section 101(b) of NEPA.

The environmental review of the construction and operation of the Sequoyah plant evaluated the baseline data on appearance, quality, productivity, and usage of the preexisting environment in the area. Probable changes in these factors have been either calculated or estimated as a means of determining the degree of the change to be expected.

The following discussions summarize probable effects which cannot be avoided and the steps taken to minimize adverse environmental impacts identified.

1. Water pollution -

(1) Construction - Some unavoidable impacts to Chickamauga Reservoir are occurring as a result of construction of the plant. These include some siltation as a result of grading, excavating, and dredging; discharge of small amounts of chemicals used in cleaning of equipment; and discharge of the sewage treatment plant effluent.

These impacts are being minimized by the following means:

. Dredging is being accomplished by a hydraulic dredge with the spoil material being disposed of in upland fill areas to avoid excessive siltation of the reservoir.

. Rock fill is being utilized as submerged fill to avoid excessive siltation in the reservoir.

. Ditching, dikes, settling ponds, jute mesh, riprap, paving, temporary grassing and mulching of exposed areas, expediting of permanent grassing, and other control devices are being used to control surface drainage and erosion during grading operations.

. Soil and earth from excavation work are being used as fill or stored in compacted mounds to prevent wind and rain erosion until needed.

. Spoil material from excavation work is being wasted in preselected areas as fill, graded to conform to surrounding landscape, covered with topsoil, seeded, and mulched to avoid erosion.

. Impacts due to chemical discharges to the reservoir will be minimized by the use of holding ponds, neutralization, and other treatment which may be required to reduce concentrations substantially below harmful levels.

. Extended aeration treatment of sanitary wastes and chlorination of effluent is being provided during construction.

(2) Operation - Operation of Sequoyah will result in varying amounts of heat and small amounts of chemical, sanitary, and radioactive liquid wastes being discharged into Chickamauga Reservoir. Mitigation of possible related effects will be accomplished as follows:

. A diffuser will rapidly mix the heated plant discharge with unheated reservoir water.

. Cooling towers that can operate in the helper and closed modes will be installed for operation during periods of critical reservoir temperatures.

. Sanitary wastes will receive the equivalent of secondary treatment with provision for effluent chlorination provided for the permanent plant.

. Radioactive waste liquids will be treated by evaporation and tritium recycled.

. Radioactive steam generator blowdown will be treated by a reverse osmosis system and by evaporation.

As indicated, liquid effluents are provided adequate treatment prior to being discharged to ensure that all applicable standards are met and that the quantities and concentrations released will be small enough to ensure that any adverse environmental effects are insignificant. Water, aquatic life, and life systems will be carefully monitored to detect adverse environmental effects, although some adverse effects may be undetectable.

2. Air pollution - The construction of Sequoyah will result in a minimal short duration impact to the atmosphere from selected burning of cleared brush and trash.

There will be some radioactive gaseous wastes released to the atmosphere and some negligible additions of nonradioactive gaseous emissions to the atmosphere. Large quantities of waste heat and moisture from the cooling tower plumes may result in some alteration of the local atmospheric conditions. During adverse weather conditions

this increased moisture content may cause local fogging and icing. In addition, some drift from the cooling towers will be carried into the atmosphere.

To the extent that local fogging and icing does occur, it represents an unavoidable adverse environmental effect. However, such occurrences resulting from the operation of the cooling systems should be infrequent.

Mitigation of the probable related effects from these discharges to the atmosphere is accomplished as follows:

. Brush and trash burning is being done in accordance with applicable state regulations and as atmospheric conditions permit.

. Radioactive gaseous waste will be held up 60 days to permit decay of essentially all noble gases except krypton-85 before release.

. Natural draft hyperbolic cooling towers disperse heat and moisture to the atmosphere about 500 feet above the ground.

. Cooling tower design will keep water losses due to drift from the cooling towers to a minimum.

No significant adverse environmental effects should be caused by these releases to the atmosphere.

3. Impact on land use - The construction and operation of the Sequoyah Nuclear Plant will result in a change in land use of approximately 525 acres from rural nonfarm use to industrial use. It will affect the economic status of Hamilton County and increase the demand for community services. In addition, right of way easements will be obtained on approximately 2,700 acres of land of which about 60 percent is in woodland, and 40 percent in cleared land.

The land use adjustments, the economic stimulus, and the demand for services are not judged to be significant adverse environmental impacts.

4. Damage to life systems - When the auxiliary cooling water and condenser cooling water or cooling tower makeup water passes through the traveling screens, fish larvae and plankton will be drawn into the water intake. These are assumed to be destroyed. The intake skimmer wall is designed such that the cooling water for Sequoyah will be taken from the channel at a depth of about 40 feet which will reduce the number of organisms entrained in the condenser cooling system. To the extent that the plankton drawn into the water intakes serves as a food source for aquatic life, its destruction is an adverse effect which cannot be avoided. However, increased productivity in downstream areas of the reservoir may partially compensate for any such loss.

Use of the 48-acre embayment for a discharge pond will cause the effects discussed in section 2.6.

Terrestrial communities on the site have largely been displaced or destroyed by plant construction as have communities on offsite areas cleared for power line, substation and road and rail access construction. New and different communities will become established on areas that will be revegetated by plant succession and/or plantings.

5. Threats to health - The facility is being designed and constructed and will be operated in accordance with all applicable regulations in order that the health and safety of the public will be safeguarded.

Significant accidental releases of radioactive products at the plant or during transportation of radioactive materials are very improbable. Should such a release occur, implementation of the radiological emergency plans would mitigate the potential risk to the public.

6. Conclusions - While the construction and the operation of Sequoyah will result in some adverse environmental effects which cannot be avoided, these effects should not conflict with the environmental goals set out in Section 101(b) of NEPA. If any significant adverse effects attributable to the construction or the operation of the plant become evident or through the various environmental monitoring programs are shown to be inimical to Section 101(b) goals, appropriate steps will be taken to correct the situation.