Energy Vision

2020

6

Volume 2, Technical Document

Supply-Side Options

Volume 2, Technical Document 6

Supply-Side Options

Contents

This technical document has a description and the characteristics for each supply-side option that was identified for consideration in Energy Vision 2020.

Option 1.1.1.1: Supercritical Pulverized Coal-Fired Plant (1X300 Megawatts) T6.15

Option 1.1.1.2: Supercritical Pulverized Coal-Fired Plant (4X300 Megawatts) T6.15

Option 1.1.1.3: Atmospheric Fluidized Bed Combustion Repowering, Generic (1X125 Megawatts) T6.15

Option 1.1.1.4: Circulating Atmospheric Fluidized Bed Combustion Plant (1X200 Megawatts) T6.15

Option 1.1.1.5: Subcritical Pulverized Coal-Fired Plant (4X300 Megawatts) T6.16

Option 1.1.2.1: Simple Cycle Combustion Turbine Plant (1X150 Megawatts) T6.16

Option 1.1.2.2: Natural Gas-Fired Combined Cycle Plant (1X470 Megawatts) T6.17

Option 1.1.2.3: Combined Cycle Repowering, Generic (1X425 Megawatts) T6.17

Option 1.1.2.4: Small Cogeneration Combined Cycle Plant (3X10 Megawatts) T6.17

Option 1.1.2.5: Small Combined Cycle Plant (1X42 Megawatts) T6.18

Option 1.1.3.1: Refuse-Derived Fuel-Fired Stoker (1X40 Megawatts) T6.18

Option 1.1.5.1: Lead Acid Battery Energy Storage (1X20 Megawatts) T6.19

Option 1.2.1.1: State-of-the-Art Pulverized Coal-Fired Power Plant (1X400 Megawatts) T6.19

Option 1.2.2.1: Compressed Air Energy Storage Plant with Humidification (3X337 Megawatts) T6.20

Option 1.2.2.2: Compressed Air Energy Storage Plant with Recuperation (3X337 Megawatts) T6.20

Option 1.2.3.1: Biomass Whole Tree Energy™ Boiler Power Plant (1X100 Megawatts) T6.21

Option 1.3.1.1: First Generation Pressurized Fluidized Bed Combustion Repowering, Generic (1X156 Megawatts) T6.23

Option 1.3.1.2: First Generation Pressurized Fluidized Bed Combustion (1X340 Megawatts) T6.23

Option 1.3.1.3: Integrated Gasification Compressed Air Storage with Humidification (1X410 Megawatts) T6.23

Option 1.3.1.4: Integrated Gasification Combined Cycle with Fertilizer Coproduction (3X227 Megawatts) T6.24

Option 1.3.1.5: Integrated Gasification Combined Cycle (3X245 Megawatts) T6.24

Option 1.3.1.6: Compressed Air Storage with Humidification with Integrated Gasification and Natural Gas Peaking (1X850 Megawatts) T6.25

Option 1.3.1.7: Advanced Pressurized Fluidized Bed Combustor with Development Cost (1X300 Megawatts) T6.26

Option 1.3.1.8: Advanced Pressurized Fluidized Bed Combustor with No Development Cost (1X300 Megawatts) T6.27

Option 1.3.1.9: Partnered Integrated Gasification Combined Cycle with Coproduction, Greenfield Site (1X530 Megawatts) T6.27

Option 1.3.1.10: Integrated Gasification Combined Cycle with Coproduction, Greenfield Site (1X498 Megawatts) T6.27

Option 1.3.1.11: Integrated Gasification Cascaded Humidified Advanced Turbine with Coproduction, Greenfield Site (1X598 Megawatts) ..... T6..27

Option 1.3.1.12: Coal Refinery/Integrated Gasification Combined Cycle, Greenfield Site (1X530 Megawatts) T6.27

Option 1.3.1.13: Coal Refinery/Integrated Gasification Cascaded Humidified Advanced Turbine, Greenfield Site (1X530 Megawatts) T6.27

Option 1.3.1.14: Coal Refinery/Integrated Gasification Cascaded Humidified Advanced Turbine with Coproduction, Greenfield Site (1X180 Megawatts) T6.28

Option 1.3.2.1: Fuel Cell – Molten Carbonate or Solid Oxide (1X2 Megawatts) T6.28

Option 1.3.2.2: Intercooled Aeroderivative Combustion Turbine (1X125 Megawatts) T6.30

Option 1.3.2.3: Cascaded Humidified Advanced Turbine (F series CT) (1X288 Megawatts) T6.30

Option 1.3.2.4: Integrated Gasification Cascaded Humidified Advanced Turbine with Coproduction (F series CT) (2X303 Megawatts) T6.30

Option 1.3.2.5: Integrated Gasification Cascaded Humidified Advanced Turbine (F series CT) (2X303 Megawatts) T6.31

Option 1.3.2.6: Cascaded Humidified Advanced Turbine (G series CT) (1X400 Megawatts) T6.30

Option 1.3.2.7: Integrated Gasification Cascaded Humidified Advanced Turbine with Coproduction (G series CT) (2X420 Megawatts) T6.30

Option 1.3.2.8: Integrated Gasification Cascaded Humidified Advanced Turbine (G series CT) (2X420 Megawatts) T6.31

Option 1.3.2.9: Integrated Fuel Cell/Combustion Turbine (1X2.5 Megawatts) T6.31

Option 1.3.3.1: Large Solar-Photovoltaic – Fixed Flat Plate (1X50 Megawatts) T6.31

Option 1.3.3.2: Landfill Methane (1X2 Megawatts) T6.31

Option 1.3.3.3: Coalbed Methane (1X2 Megawatts) T6.32

Option 1.3.3.4: Biorefinery - Coproduction of Electricity and Chemicals from Biomass (1X100 Megawatts) T6.33

Option 1.3.5.1: Advanced Battery Energy Storage (1X20 Megawatts) T6.33

Option 1.3.5.2: Superconducting Magnetic Energy Storage (1X500 Megawatts) T6.33

Option 2.1.3.1: Additional Hydro Generation at Existing Nonpower Projects (1X10 Megawatts) T6.34

Option 2.1.3.2: Additional Hydro Generation at Existing Projects (1X24 Megawatts) T6.34

Option 2.1.3.3: Additional Hydro Generation – New Conventional Projects (1X65 Megawatts) T6.34

Option 2.1.3.4: Hydro Modernization at Existing Projects T6.34

Option 3.3.1.1: Generic Pressurized Fluidized Bed Combustion Cogeneration (1X70 Megawatts) T6.35

Option 4.1.1.1: Lignite-Fired Circulating Fluidized Bed Combustion Plant (1X200 Megawatts) T6.35

Option 5.1.1.1: Non-Utility Generation – Generic Independent Power Producer Lignite Circulating Fluidized Bed Combustion Plant (1X300 Megawatts) T6.35

Option 6.3.2.7: Gas Turbine – Modular Helium Reactor (3X289 Megawatts) T6.36

Option 6.3.4.1: Advanced Light Water Reactor (1X1300 Megawatts) T6.36

Option 7.1.1.1: Bellefonte Repowering with Integrated Gasification Combined Cycle (9X250 Megawatts) T6.37

Option 7.1.1.2: Bellefonte Repowering with Pulverized Coal (4X616 Megawatts) T6.37

Option 7.1.1.3: Bellefonte Repowering – Phased Combined Cycle/Integrated Gasification Combined Cycle – Phase A – Combined Cycle (9X222 Megawatts) T6.38

Option 7.1.1.4: Bellefonte Repowering – Phased Combined Cycle/Integrated Gasification Combined Cycle – Phase B – Integrated Gasification Combined Cycle (9X250 Megawatts) T6.38

Option 7.1.1.5: Bellefonte Repowering – Integrated Gasification Combined Cycle with Coproduction (11X229 Megawatts) T6.38

Option 7.1.1.6: Bellefonte Repowering – Integrated Gasification Combined Cycle with Coproduction with Partners (2X242 Megawatts) T6.39

Option 7.1.1.7: Bellefonte Repowering – Integrated Gasification Combined Cycle Demonstration with Partners (1X250 Megawatts) T6.39

Option 7.1.2.1: Bellefonte Repowering – Natural Gas Combined Cycle (10X222 Megawatts) T6.39

Options 7.1.4.1 and 7.1.4.2: Completion of Bellefonte Units 1 and 2 as Nuclear (1X1212 Megawatts) T6.39

Option 7.1.4.3: Bellefonte Units 1 and 2 Cancellation T6.40

Option 7.1.4.4: Bellefonte Nuclear Plant – Partnership for Completion and Operation T6.40

Option 8.1.4.1: Recover Browns Ferry Unit 1 (1X1065 Megawatts) T6.41

Option 8.1.4.2: Browns Ferry Unit 1 Cancellation T6.41

Option 8.1.4.3: Browns Ferry Unit 1 Recovery with Fixed Cost to Complete (1X1065 Megawatts) T6.42

Option 9.1.4.1: Completion of Watts Bar Unit 2 (1X1170 Megawatts) T6.42

Option 9.1.4.2: Watts Bar Unit 2 Cancellation T6.43

Option 10.1.2.1: Inlet Air Precooling with Storage (16X61 Megawatts) T6.43

Option 10.1.2.2: New Combustion Turbine at Johnsonville to Supply Steam to DuPont (1X174 Megawatts) T6.43

Option 10.1.2.3: Repowering One of Johnsonville Fossil Units 7-10 with Natural Gas/Combined Cycle (1X465 Megawatts) T6.44

Option 10.1.2.4: Water Spray Cooling of Combustion Turbine Inlet Air T6.43

Option 10.3.1.1: Repowering One of Johnsonville Fossil Units 1-6 with Integrated Gasification Combined Cycle (1X242 Megawatts) T6.44

Option 10.3.1.2: Repowering One of Johnsonville Fossil Units 7-10 with Integrated Gasification Combined Cycle (1X250 Megawatts) T6.44

Option 11.1.5.1: Laurel Branch Pumped-Hydro Storage (4X386 Megawatts) T6.45

Option 12.1.2.1: Generic Combined Cycle Cogeneration (2X210 Megawatts) T6.35

Option 13.1.2.1: Non-Utility Generation – Generic Independent Power Producer Combined Cycle (2X260 Megawatts) T6.35

Option 13.1.2.2: Non-Utility Generation – Generic Natural Gas Independent Power Producer Combined Cycle (1X150 Megawatts) T6.35

Option 14.1.3.1: Wind – 33 Meter Variable Speed Advanced Wind Turbine (285X0.35 Megawatts) T6.45

Option 14.3.3.1: Wind – 39 Meter Variable Speed Advanced Wind Turbine (444X0.45 Megawatts) T6.45

Option 15.1.5.1: Reynolds Creek Pumped-Hydro Storage (3X366 Megawatts) T6.45

Option 16.1.5.1: Raccoon Mountain Pumped-Hydro Energy Storage Addition (3X255 Megawatts) T6.46

Option 16.1.5.2: Raccoon Mountain Pumped-Storage Modernization T6.46

Option 17.1.5.1: Rorex Creek Pumped-Hydro Storage (3X292 Megawatts) T6.45

Option 18.1.1.1: Shawnee Unit 11 (1X168 Megawatts) T6.46

Option 19.3.1.1: Non-Utility Generation – Generic Integrated Gasification Combined Cycle (1X110 Megawatts) T6.35

Option 20.1.1.1: Restart One Unit of Watts Bar Fossil Plant (1X56 Megawatts) T6.46

Option 20.1.3.1: Refuse-Derived Fuel – Fluidized Bed Combustion Repowering of One Unit of Watts Bar Fossil Plant (1X56 Megawatts) T6.47

Option 20.1.3.2: Refuse-Derived Fuel Companion Boiler at Watts Bar Fossil Plant (1X60 Megawatts) T6.18

Option 20.3.1.1: Repowering Two Units of Watts Bar Fossil Plant with Integrated Gasification Combined Cycle (1X242 Megawatts) T6.44

Option 21.1.3.1: Refuse-Derived Fuel Companion Boiler at Kingston Fossil Plant (1X60 Megawatts) T6.18

Option 22.1.1.1: Non-Utility Generation – Generic Independent Power Producer Pulverized Coal with Cogeneration (2X170 Megawatts) T6.35

Option 23.1.2.1: Power Purchase – Base Load (1X300 Megawatts) T6.48

Option 23.1.2.2: Power Purchase – Peaking (1X300 Megawatts) T6.48

Option 23.1.3.1: Non-Utility Generation – Generic Independent Power Producer Run of River Hydro (4X20 Megawatts) T6.35

Option 24.1.1.1: Unit Power Purchase 15 Year T6.48

Option 24.1.1.2: Partially Complete Pulverized Coal Plant (1X710 Megawatts) T6.48

Option 25.1.2.1: Repowering Allen Fossil Plant with Natural Gas/Combined Cycle (1X705 Megawatts) T6.44

Option 25.3.1.1: Repowering Allen Fossil Plant with Integrated Gasification Combined Cycle (1X500 Megawatts) T6.44

Option 26.1.3.1: Biomass Cofiring – Customer Service T6.48

Option 26.2.3.1: Biomass Cofiring – Low Level T6.48

Option 26.3.3.1: Biomass Cofiring – Less than $5.00 Per Ton of Carbon Dioxide Emissions Reduction T6.49

Option 28.2.3.2: Biomass Cofiring – Moderate Level at Colbert Fossil Plant Unit 5 ..... T6.49

Option 29.1.5.1: Non-Utility Generation – Generic Independent Power Producer Pumped-Hydro Storage T6.35

Supply-Side Options

Over 100 different supply-side options were identified during the course of Energy Vision 2020. These options represent a broad spectrum of options—both in terms of fuel source and operating characteristics. While the full range of supply-side options is nearly unlimited, this set provides a reasonable representation of the options that are available. In some cases, two or more similar options were defined in order to better evaluate specific differences. In most cases, however, the options represent a "typical" configuration and not necessarily the only design that could be considered. This document provides additional descriptions and characterizations of each of the options that have been identified.

Figure T6-1 shows performance, cost, and environmental characteristics for the conventional TVA supply-side options. *Figure T6-2* shows additional characteristics for the flexible TVA supply-side options.

FIGURE T6-1. Conventional TVA Supply-Side Options

Number	Option ID	Option Name	Status	Duty Cycle	Net Full Load Capacity (MW)	Net Full Load Heat Rate (Btu/kWh)	Fuel	Total Schedule (Yr)	Coproducts	Base Capital Cost ($/kW)
			PERFORMANCE CHARACTERISTICS							
1	1.1.1.1	Supercritical Pulverized Coal-Fired Plant (1x300 MW)	Mature Commercial	Base	300	9,522	High Sulfur Coal	7	None	$1,614
2	1.1.1.2	Supercritical Pulverized Coal-Fired Plant (4x300 MW)	Mature Commercial	Base	1,200	9,522	High Sulfur Coal	8	None	$1,345
3	1.1.1.3	Atmospheric Fluidized Bed Combustion Repowering, Generic (1x125 MW)	Initial Commercial	Base	125	10,600	High Sulfur Coal	6	None	$1,119
4	1.1.1.4	Circulating Atmospheric Fluidized Bed Combustion Plant (1x200 MW)	Initial Commercial	Base	200	9,830	High Sulfur Coal	8	None	$1,486
5	1.1.1.5	Subcritical Pulverized Coal-Fired Plant (4x300 MW)	Mature Commercial	Base	1,200	10,000	High Sulfur Coal	8	None	$1,413
6	1.1.2.1	Simple Cycle Combustion Turbine Plant (1x150 MW)	Mature Commercial	Peaking	150	10,500	Natural Gas	5	None	$360
7	1.1.2.2	Natural Gas-Fired Combined Cycle Plant (1x470 MW)	Mature Commercial	Intermediate	470	7,000	Natural Gas	5	None	$655
8	1.1.2.3	Combined Cycle Repowering, Generic (1x425 MW)	Initial Commercial	Intermediate	425	7,900	Natural Gas	4	None	$487
9	1.1.2.4	Small Cogeneration Combined Cycle Plant (3x10 MW)	Mature Commercial	Base	30	12,000	Natural Gas	4	Steam	$1,120
10	1.1.2.5	Small Combined Cycle Plant (1x42 MW)	Mature Commercial	Peaking / Intermediate	42	8,600	Natural Gas	4.5	None	$800
11	1.1.3.1	Refuse-Derived Fuel-Fired Stoker (1x40 MW)	Mature Commercial	Base	40	16,464	Refuse-Derived Fuel	8	None	$5,740
12	1.1.5.1	Lead Acid Battery Energy Storage (1x20 MW)	Mature Commercial	Peaking	20	NA	NA	3	None	$578
13	1.2.1.1	State-of-the-Art Pulverized Coal-Fired Plant (1x400 MW)	Large Scale Demo	Base	400	8,110	High Sulfur Coal	7	None	$1,417
14	1.2.2.1	Compressed Air Energy Storage with Humidification (3x337 MW)	Initial Commercial	Peaking	1,011	5,874	Natural Gas	7	None	$315
15	1.2.2.2	Compressed Air Energy Storage with Recuperation (3x337 MW)	Initial Commercial	Peaking	1,011	4,509	Natural Gas	7	None	$338
16	1.2.3.1	Biomass Whole Tree Energy Boiler Power Plant (1x100 MW)	Large Scale Demo	Base	100	10,654	Biomass	8	None	$1,512
17	1.3.1.1	First Generation Pressurized Fluidized Bed Combustion Repowering, Generic (1x156 MW)	Large Scale Demo	Base	156	8,830	High Sulfur Coal	6	None	$1,167
18	1.3.1.2	First Generation Pressurized Fluidized Bed Combustion (1x340 MW)	Large Scale Demo	Base	340	8,200	High Sulfur Coal	8	None	$1,281
19	1.3.1.3	Integrated Gasification Compressed Air Storage with Humidification (1x410 MW)	Large Scale Demo	Intermediate	410	10,020	High Sulfur Coal	8	Sulfur	$1,492
20	1.3.1.4	Integrated Gasification Combined Cycle with Fertilizer Coproduction (3x227 MW)	Initial Commercial	Base	682	9,860	High Sulfur Coal	8	Urea	$2,241
21	1.3.1.5	Integrated Gasification Combined Cycle (3x245 MW)	Initial Commercial	Base	740	7,230	High Sulfur Coal	8	Sulfur	$1,524
22	1.3.1.6	Compressed Air Storage with Humidification with Integrated Gasification & Natural Gas Peaking (1x850 MW)	Large Scale Demo	Intermediate/ Peaking	850	4,700	Natural Gas and Coal	8	Sulfur	$872

COST CHARACTERISTICS					ENVIRONMENTAL AND OTHER CHARACTERISTICS					
Fuel Cost ($/MMBtu)	Base Fixed Operating & Maintenance ($/kW-Yr)	Base Variable Operating & Maintenance (Mills/kWh)	Base Fixed Additions & Improvements ($/kW-Yr)	Base Decommissioning Cost ($ Million)	Sulfur Dioxide (lb/MMBtu)	Nitrogen Oxides (lb/MMBtu)	Carbon Dioxide (lb/MMBtu)	Thermal Discharge (MMBtu/MWh)	Solid Waste (lb/MMBtu)	Economic Development [1] (Annual Average Employment)
$1.00	$21.80	1.3	$13.60	$0	0.3	0.1	210	0	24.02	NA
$1.00	$20.00	1.3	$13.60	$0	0.3	0.1	210	0	24.02	918
$1.00	$21.20	1.4	$14.70	$0	0.25	0.1	210	6.02	31.74	NA
$1.00	$21.00	1.4	$14.70	$0	0.25	0.1	210	0	31.74	NA
$1.00	$20.00	1.3	$13.60	$0	0.3	0.15	210	0	24.02	NA
$2.48	$2.00	2.6	$0.00	$0	0	0.08	115	0	0	20
$2.48	$4.70	1.3	$4.50	$0	0	0.08	115	0	0	128
$2.48	$4.60	1.3	$4.50	$0	0	0.08	115	0.82	0	96
$2.48	$18.30	3.2	$0.00	$0	0	0.16	115	0	0	NA
$2.48	$13.10	4.3	$0.00	$0	0	0.16	115	0	0	NA
($1.54)	$84.00	1.8	$58.00	$0	0.07	0.06	0	0	21.43	128
NA	$2.50	7.7	$7.10	$0	0	0	0	0	0	4
$1.00	$19.90	1.6	$16.00	$0	0.1	0.06	210	0	24.02	NA
$2.48	$2.20	2.5	$0.00	$0	0	0.03	115	0	0	130
$2.48	$2.20	2.6	$0.00	$0	0	0.03	115	0	0	NA
$1.87	$33.50	7	$12.50	$0	0.002	0.1	-267	0	0.57	190
$1.00	$18.70	4	$16.90	$0	0.25	0.1	210	3.33	30.14	NA
$1.00	$29.00	1.3	$27.80	$0	0.25	0.1	210	0	30.14	NA
$1.00	$20.50	0.4	$15.00	$0	0.05	0.03	210	0	9.48	NA
$1.00	$22.50	1.2	$13.20	$0	0.035	0.029	159	0	9.48	NA
$1.00	$20.80	1.2	$12.00	$0	0.05	0.035	205	0	9.48	610
$2.48 & $1.00	$20.50	0.4	$15.00	$0	0.025	0.03	180	0	7.22	NA

[1] Calculated for selected options only

FIGURE T6-1. **Conventional TVA Supply-Side Options** *CONTINUED*

Number	Option ID	Option Name	Status	Duty Cycle	Net Full Load Capacity (MW)	Net Full Load Heat Rate (Btu/kWh)	Fuel	Total Schedule (Yr)	Coproducts	Base Capital Cost ($/kW)
			PERFORMANCE CHARACTERISTICS							
23	1.3.1.7	Advanced Pressurized Fluidized Bed Combustor with Development Cost (1x300 MW)	Initial Commercial	Base	300	7,400	High Sulfur Coal	8	0	$1,518
24	1.3.1.8	Advanced Pressurized Fluidized Bed Combustor with No Development Cost (1x300 MW)	Initial Commercial	Base	300	7,400	High Sulfur Coal	8	0	$1,246
25	1.3.1.9	Partnered IGCC with Coproduction, Greenfield Site (1x530 MW)	CC-Mature Commercial	Base	530	7,200	Syngas	8	None	$581
26	1.3.1.10	IGCC with Coproduction, Greenfield Site (1x498 MW)	Initial Commercial	Base	498	11,140	High Sulfur Coal	8	Methanol	$2,325
27	1.3.1.11	Integrated Gasification Cascaded Humidified Advanced Turbine (IGCHAT) with Coproduction, Greenfield Site (1x598 MW)	Initial Commercial	Base	598	10,515	High Sulfur Coal	8	Methanol	$1,930
28	1.3.1.12	Coal Refinery/IGCC, Greenfield Site (1x530 MW)	Initial Commercial	Base	530	17,000	High Sulfur Coal	8	Naphtha, Benzene	$2,590
29	1.3.1.13	Coal Refinery/IGCHAT, Greenfield Site (1x530 MW)	Initial Commercial	Base	530	17,000	High Sulfur Coal	8	Naphtha, Benzene	$2,325
30	1.3.1.14	Coal Refinery/IGCHAT with Coproduction, Greenfield Site (1x180 MW)	Initial Commercial	Base	180	43,250	High Sulfur Coal	8	Methanol	$7,100
31	1.3.2.1	Fuel Cell - Molten Carbonate or Solid Oxide (1x2 MW)	Large Scale Demo	Base	2	6,450	Natural Gas	4	Waste Heat, Steam	$1,034
32	1.3.2.2	Intercooled Aeroderivative Combustion Turbine (1x125 MW)	Large Scale Demo	Intermediate/ Peaking	125	8,100	Natural Gas	5	None	$467
33	1.3.2.3	Cascaded Humidified Advanced Turbine (F Series CT) (1x288 MW)	Large Scale Demo	Intermediate	288	7,315	Natural Gas	6	None	$503
34	1.3.2.4	Integrated Gasification Cascaded Humidified Advanced Turbine with Coproduction (F Series CT) (2x303 MW)	Large Scale Demo	Base	606	12,485	High Sulfur Coal	8	Urea, MTBE, Methanol	$1,739
35	1.3.2.5	Integrated Gasification Cascaded Humidified Advanced Turbine (F Series CT) (2x303 MW)	Large Scale Demo	Base	606	8,750	High Sulfur Coal	8	None	$1,243
36	1.3.2.6	Cascaded Humidified Advanced Turbine (G Series CT) (1x400 MW)	Large Scale Demo	Intermediate	400	6,920	Natural Gas	6	None	$477
37	1.3.2.7	Integrated Gasification Cascaded Humidified Advanced Turbine with Coproduction (G Series CT) (2x420 MW)	Large Scale Demo	Base	840	10,660	High Sulfur Coal	8	Urea, MTBE, Methanol	$1,622
38	1.3.2.8	Integrated Gasification Cascaded Humidified Advanced Turbine (G Series CT) (2x420 MW)	Large Scale Demo	Base	840	8,200	High Sulfur Coal	8	None	$1,126
39	1.3.2.9	Integrated Fuel Cell/Combustion Turbine (1x2.5 MW)	Large Scale Demo	Base	2.5	5,250	Natural Gas	4	None	$1,240
40	1.3.3.1	Large Solar-Photovoltaic - Fixed Flat Plate (1x50 MW)	Pilot Scale	Intermediate	50	NA	Solar	7	None	$3,032
41	1.3.3.2	Landfill Methane (1x2 MW)	Pilot Scale	Intermediate	2	6,450	Landfill Gas (Methane)	3	Waste Heat, Steam	$1,034
42	1.3.3.3	Coalbed Methane (1x2 MW)	Pilot Scale	Intermediate	2	6,450	Coalbed Methane	3	Waste Heat, Steam	$1,034
43	1.3.3.4	Biorefinery - Coproduction of Electricity and Chemicals (1x100 MW)	Demo	Base	100	18,000	Biomass	5	Multiproducts	$4,000

COST CHARACTERISTICS					ENVIRONMENTAL AND OTHER CHARACTERISTICS					
Fuel Cost ($/MMBtu)	Base Fixed Operating & Maintenance ($/kW-Yr)	Base Variable Operating & Maintenance (Mills/kWh)	Base Fixed Additions & Improvements ($/kW-Yr)	Base Decommissioning Cost ($ Million)	Sulfur Dioxide (lb/MMBtu)	Nitrogen Oxides (lb/MMBtu)	Carbon Dioxide (lb/MMBtu)	Thermal Discharge (MMBtu/MWh)	Solid Waste (lb/MMBtu)	Economic Development [1] (Annual Average Employment)
$1.00	$36.00	1.3	$6.50	$0	0.4	0.1	210	0	30.14	NA
$1.00	$36.00	1.3	$6.50	$0	0.4	0.1	210	0	30.14	NA
$1.00	$4.20	1.2	$4.00	$0	0.03	0.08	131	0	0	NA
$1.00	$57.00	2.5	$0.00	$0	0.03	0.08	173	0	0	NA
$1.00	$54.00	2.5	$0.00	$0	0.03	0.08	173	0	0	NA
$1.00	$55.00	2.6	$0.00	$0	0.03	0.08	173	0	0	NA
$1.00	$50.00	2.6	$0.00	$0	0.03	0.08	173	0	0	NA
$1.00	$275.00	20	$5.00	$0	0.03	0.08	173	0	0	NA
$2.48	$10.00	1.7	$105.00	$0	0	0.16	115	0	0	1
$2.48	$3.50	3.7	$0.00	$0	0	0.08	115	0	0	NA
$2.48	$4.50	1.3	$3.50	$0	0	0.005	115	0	0	65
$1.00	$20.80	1.7	$13.20	$0	0.035	0.01	205	0	9.48	NA
$1.00	$18.60	0.9	$13.20	$0	0.05	0.01	205	0	9.48	NA
$2.48	$4.50	1.3	$3.50	$0	0	0.005	110	0	0	NA
$1.00	$20.80	1.7	$13.20	$0	0.035	0.01	205	0	9.48	NA
$1.00	$18.60	0.9	$13.20	$0	0.05	0.01	205	0	9.48	569
$2.48	$0.60	12	$70.00	$0	0	0.005	110	0	0	NA
NA	$5.00	0	$1.30	$0	0	0	0	0	0	44
$1.29	$9.80	1.7	$40.00	$0	0	0.16	-798	0	0	1
$1.80	$9.80	1.7	$40.00	$0	0	0.16	115	0	0	1
$3.00	$200.00	40.0	$0.00	$0	0.05	0.1	0	0	1.0	NA

[1] Calculated for selected options only

FIGURE T6-1. **Conventional TVA Supply-Side Options** *CONTINUED*

Number	Option ID	Option Name	Status	PERFORMANCE CHARACTERISTICS						Base Capital Cost ($/kW)
				Duty Cycle	Net Full Load Capacity (MW)	Net Full Load Heat Rate (Btu/kWh)	Fuel	Total Schedule (Yr)	Coproducts	
44	1.3.5.1	Advanced Battery Energy Storage (1x20 MW)	Pilot Scale	Peaking	20	NA	NA	3	None	$491
45	1.3.5.2	Superconducting Magnetic Energy Storage (1x500 MW)	Pilot Scale	Peaking	500	NA	NA	8	None	$1,235
46	2.1.3.1	Additional Hydro Generation at Existing Nonpower Projects (1x10 MW)	Mature Commercial	Peaking	10	NA	NA	5	None	$2,460
47	2.1.3.2	Additional Hydro Generation at Existing Projects (1x24 MW)	Mature Commercial	Peaking	24	NA	NA	6	None	$4,288
48	2.1.3.3	Additional Hydro Generation-New Conventional Projects (1x65 MW)	Mature Commercial	Peaking	65	NA	NA	9	None	$8,753
49	2.1.3.4	Hydro Modernization at Existing Projects	Mature Commercial	Peaking	3,864	NA	NA	11	None	$52
50	3.3.1.1	Generic Pressurized Fluidized Bed Combustion Cogeneration (1x70 MW)	Large Scale Demo	Base	70	7,700	High Sulfur Coal	6	Steam	$0
51	4.1.1.1	Lignite-Fired Circulating Fluidized Bed Combustion Plant (1x200 MW)	Initial Commercial	Base	200	10,777	Lignite	7	None	$1,600
52	5.1.1.1	NUG - Generic IPP Lignite Circulating Fluidized Combustion Plant (1x300 MW)	Mature Commercial	Base	300	10,500	Lignite	5	None	$0
53	6.3.2.7	Gas Turbine - Modular Helium Reactor (3x289 MW)	Pilot Scale	Base	867	7,070	Nuclear	13	None	$2,273
54	6.3.4.1	Advanced Light Water Reactor (1x1300 MW)	Large Scale Demo	Base	1,300	10,200	Nuclear	10	None	$1,904
55	7.1.1.1	Bellefonte Repowering with Integrated Gasification Combined Cycle (9x250 MW)	Initial Commercial	Base	2,250	8,488	High Sulfur Coal	9	None	$1,484
56	7.1.1.2	Bellefonte Repowering with Pulverized Coal (4x616 MW)	Mature Commercial	Base	2,464	9,611	Medium Sulfur Coal	11	None	$1,263
57	7.1.1.3	Bellefonte Repowering - Phased Combined Cycle/IGCC - Phase A -Combined Cycle (9x222 MW)	Mature Commercial	Intermediate	1,997	7,367	Natural Gas	8	None	$551
58	7.1.1.4	Bellefonte Repowering - Phased Combined Cycle/IGCC - Phase B - IGCC (9x250 MW)	Initial Commercial	Base	2,250	8,463	High Sulfur Coal	7	None	$1,555
59	7.1.1.5	Bellefonte Repowering - IGCC with Coproduction (11x229 MW)	Initial Commercial	Base	2,520	12,560	High Sulfur Coal	11	Multi-products	$1,857
60	7.1.1.6	Bellefonte Repowering - IGCC with Coproduction with Partners (2x242 MW)	Initial Commercial	Base	484	7,200	Syngas	8	Multi-products	$465
61	7.1.1.7	Bellefonte Repowering - IGCC Demo with Partners (1x400 MW)	Initial Commercial	Base	400	7,200	Syngas	5	Multi-products	$600
62	7.1.2.1	Bellefonte Repowering - Natural Gas Combined Cycle (10x222 MW)	Mature Commercial	Intermediate	2,220	7,367	Natural Gas	8	None	$475
63	7.1.4.1	Completion of Bellefonte Unit 1 as Nuclear (1x1212 MW)	Mature Commercial	Base	1,212	10,204	Nuclear	5	None	$2,163
64	7.1.4.2	Completion of Bellefonte Unit 2 as Nuclear (1x1212 MW)	Mature Commercial	Base	1,212	10,204	Nuclear	6	None	$1,505

COST CHARACTERISTICS					ENVIRONMENTAL AND OTHER CHARACTERISTICS					
Fuel Cost ($/MMBtu)	Base Fixed Operating & Maintenance ($/kW-Yr)	Base Variable Operating & Maintenance (Mills/kWh)	Base Fixed Additions & Improvements ($/kW-Yr)	Base Decommissioning Cost ($ Million)	Sulfur Dioxide (lb/MMBtu)	Nitrogen Oxides (lb/MMBtu)	Carbon Dioxide (lb/MMBtu)	Thermal Discharge (MMBtu/MWh)	Solid Waste (lb/MMBtu)	Economic Development [1] (Annual Average Employment)
NA	$2.50	6.9	$1.10	$0	0	0	0	0	0	NA
NA	$4.00	4.2	$1.20	$0	0	0	0	0	0	NA
NA	$7.50	0	$11.40	$0	0	0	0	0	0	NA
NA	$7.50	0	$11.40	$0	0	0	0	0	0	NA
NA	$7.40	0	$11.40	$0	0	0	0	0	0	NA
NA	$6.90	0	$10.80	$0	0	0	0	0	0	619
NA	$150.00	40	$0.00	$0	0.25	0.1	210	0	30.14	NA
$1.40	$21.00	1.4	$18.50	$0	0.4	0.1	210	0	38.02	NA
NA	$240.80	12.9	$0.00	$0	0.6	0.27	210	0	38.02	280
$1.31	$39.60	0.3	$16.20	$300	0	0	0	0	0	NA
$0.41	$45.30	0.1	$16.20	$350	0	0	0	0	0	NA
$1.00	$20.40	1.2	$12.00	$0	0.05	0.03	205	0	9.48	NA
$1.38	$20.00	1.3	$13.60	$0	0.3	0.15	210	0	24.02	NA
$2.48	$5.00	2.8	$0.00	$0	0	0.03	115	0	0	NA
$1.00	$20.40	1.2	$12.00	$0	0.05	0.03	205	0	9.48	NA
$1.00	$27.80	2.6	$15.50	$0	0.035	0.03	173	0	9.48	NA
$3.59	$4.70	1.3	$4.50	$0	0.03	0.08	131	0	9.48	108
$3.59	$4.70	1.3	$4.50	$0	0.03	0.08	131	0	9.48	NA
$2.48	$4.70	1.3	$4.50	$0	0	0.03	115	0	0	NA
$0.41	$92.00	0	$12.40	$300	0	0	0	0	0	NA
$0.41	$46.00	0	$12.40	$300	0	0	0	0	0	NA

[1] Calculated for selected options only

FIGURE T6-1. **Conventional TVA Supply-Side Options** *CONTINUED*

Number	Option ID	Option Name	PERFORMANCE CHARACTERISTICS							
			Status	Duty Cycle	Net Full Load Capacity (MW)	Net Full Load Heat Rate (Btu/kWh)	Fuel	Total Schedule (Yr)	Coproducts	Base Capital Cost ($/kW)
65	7.1.4.3	Bellefonte Units 1&2 Cancellation	NA	NA	NA	NA	NA	NA	NA	NA
66	7.1.4.4	Bellefonte- Partnership for Completion and Operation	Mature Commercial	Base	600	NA	Nuclear	4.5	None	NA
67	8.1.4.1	Recover Browns Ferry Unit 1 (1x1065 MW)	Mature Commercial	Base	1,065	10,418	Nuclear	5	None	$2,229
68	8.1.4.2	Browns Ferry Unit 1 Cancellation	NA	NA	NA	NA	NA	NA	NA	NA
69	8.1.4.3	Browns Ferry Unit 1 Recovery with Fixed Cost to Complete (1x1065 MW)	Mature Commercial	Base	1,065	10,418	Nuclear	5	None	$1,502
70	9.1.4.1	Completion of Watts Bar Unit 2 (1x1170 MW)	Mature Commercial	Base	1,170	10,000	Nuclear	5	None	$1,875
71	9.1.4.2	Watts Bar Unit 2 Cancellation	NA	NA	NA	NA	NA	NA	NA	NA
72	10.1.2.1	Inlet Air Precooling with Storage (16x61 MW)	Mature Commercial	Summer Peaking	982	8,847	Natural Gas	3	None	$51
73	10.1.2.2	New Combustion Turbine at Johnsonville to Supply Steam to DuPont (1x174 MW)	Mature Commercial	Base	174	9,834	Natural Gas	4	None	$1,113
74	10.1.2.3	Repowering One of JOF 7-10 with Natural Gas/Combined Cycle (1x465 MW)	Initial Commercial	Intermediate	465	7,100	Natural Gas	4	None	$481
75	10.1.2.4	Water Spray Cooling of Combustion Turbine Inlet Air	Initial Commercial	Summer Peaking	97	13,230	Natural Gas	2	None	$17
76	10.3.1.1	Repowering One of JOF Units 1-6 with IGCC (1x242 MW)	Initial Commercial	Base	242	8,700	High Sulfur Coal	7	None	$1,470
77	10.3.1.2	Repowering One of JOF Units 7-10 with IGCC (1x250 MW)	Initial Commercial	Base	250	8,400	High Sulfur Coal	7	None	$1,440
78	11.1.5.1	Laurel Branch Pumped-Hydro Storage (4x386 MW)	Mature Commercial	Peaking	1,544	NA	NA	10	None	$1,120
79	12.1.2.1	Generic Combined Cycle Cogeneration (2x210 MW)	Mature Commercial	Base	420	9,045	Natural Gas	4	Steam	$0
80	13.1.2.1	NUG - Generic IPP Combined Cycle (2x260 MW)	Mature Commercial	Intermediate	520	7,200	Natural Gas	4	None	$0
81	13.1.2.2	NUG - Generic IPP Combined Cycle (1x150 MW)	Mature Commercial	Intermediate	150	7,500	Natural Gas	5	None	$0
82	14.1.3.1	Wind - 33 Meter Variable Speed Advanced Wind Turbine (285x0.35 MW)	Initial Commercial	Intermediate	100	NA	Wind	6	None	$1,056
83	14.3.3.1	Wind - 39 Meter Variable Speed Advanced Wind Turbine (444x0.45 MW)	Pilot Scale	Intermediate	200	NA	Wind	6	None	$958
84	15.1.5.1	Reynolds Creek Pumped-Hydro Storage (3x366 MW)	Mature Commercial	Peaking	1,098	NA	NA	10	None	$1,498
85	16.1.5.1	Raccoon Mountain Pumped-Hydro Energy Storage Addition (3x255 MW)	Mature Commercial	Peaking	765	NA	NA	10	None	$1,038
86	16.1.5.2	Raccoon Mountain Pumped-Storage Modernization	Mature Commercial	Peaking	1,608	NA	NA	6	None	$20
87	17.1.5.1	Rorex Creek Pumped-Hydro Storage (3x292 MW)	Mature Commercial	Peaking	876	NA	NA	10	None	$1,075
88	18.1.1.1	Shawnee Unit 11 (1x168 MW)	Mature Commercial	Base / Intermediate	168	10,241	Low Sulfur Coal	5	None	$561

COST CHARACTERISTICS					ENVIRONMENTAL AND OTHER CHARACTERISTICS					
Fuel Cost ($/MMBtu)	Base Fixed Operating & Maintenance ($/kW-Yr)	Base Variable Operating & Maintenance (Mills/kWh)	Base Fixed Additions & Improvements ($/kW-Yr)	Base Decommissioning Cost ($ Million)	Sulfur Dioxide (lb/MMBtu)	Nitrogen Oxides (lb/MMBtu)	Carbon Dioxide (lb/MMBtu)	Thermal Discharge (MMBtu/MWh)	Solid Waste (lb/MMBtu)	Economic Development [1] (Annual Average Employment)
NA	NA	NA	NA	$0	NA	NA	NA	NA	NA	NA
NA	$180.00	9.3	NA	NA	0	0	0	0	0	2,818
$0.41	$46.00	0	$14.10	$350	0	0	0	8.17	0	NA
NA	NA	NA	NA	$0	0	0	0	0	0	NA
$0.41	$46.00	0	$14.10	$350	0	0	0	0	0	NA
$0.41	$46.00	0	$12.80	$300	0	0	0	0	0	NA
NA	NA	NA	NA	$0	NA	NA	0	0	0	NA
$2.48	$2.50	2.6	$0.00	$0	0	0.16	115	0	0	NA
$2.48	$4.70	2.8	$0.00	$0	0	0.08	115	0	0	NA
$2.48	$5.30	0.9	$3.80	$0	0	0.08	115	0.39	0	110
$2.48	$4.70	2.8	$0.00	$0	0	0.08	115	3.68	0	NA
$1.00	$16.00	1.6	$18.80	$0	0.05	0.03	205	4.33	9.48	NA
$1.00	$26.30	1.6	$19.00	$0	0.05	0.03	205	4.06	9.48	NA
NA	$1.60	0	$2.50	$0	0	0	0	0	0	NA
NA	$120.00	15	$0.00	$0	0.0004	0.048	115	0	0	59
NA	$175.00	15	$0.00	$0	0.00063	0.048	115	0	0	27
NA	$86.70	17.2	$0.00	$0	0	0.08	115	0	0	15
$0.00	$25.00	0	$0.00	$0	0	0	0	0	0	76
$0.00	$15.00	0	$0.00	$0	0	0	0	0	0	108
NA	$1.80	0	$2.50	$0	0	0	0	0	0	NA
NA	$1.30	0	$2.50	$0	0	0	0	0	0	NA
NA	$1.40	0	$2.50	$0	0	0	0	0	0	NA
NA	$2.20	0	$2.50	$0	0	0	0	0	0	NA
$1.38	$19.60	0.6	$13.60	$0	1.2	0.8	205	0	0	92

[1] Calculated for selected options only

FIGURE T6-1. **Conventional TVA Supply-Side Options** *CONTINUED*

Number	Option ID	Option Name	Status	Duty Cycle	Net Full Load Capacity (MW)	Net Full Load Heat Rate (Btu/kWh)	Fuel	Total Schedule (yr)	Coproducts	Base Capital Cost ($/kW)
			PERFORMANCE CHARACTERISTICS							
89	19.3.1.1	NUG - Generic Integrated Gasification Combined Cycle (1x110 MW)	Large Scale Demo	Base	110	8,200	High Sulfur Coal	5	None	$0
90	20.1.1.1	Restart One Unit of Watts Bar Fossil Plant (1x56 MW)	Mature Base/ Commercial	Intermediate	56	12,519	Low Sulfur Coal	4	None	$575
91	20.1.3.1	RDF - Fluidized Bed Combustion Repowering of One Unit of Watts Bar Fossil Plant (1x56 MW)	Mature Commercial	Base	56	14,000	Refuse-Derived Fuel	6	RDF Credit	$2,551
92	20.1.3.2	RDF Companion Boiler at Watts Bar Fossil (1x60 MW)	Mature Commercial	Base	60	14,000	Refuse-Derived Fuel	6	RDF Credit	$2,333
93	20.3.1.1	Repowering Two Units of Watts Bar Fossil Plant with IGCC (1x242 MW)	Initial Commercial	Base	242	8,900	High Sulfur Coal	7	0	$1,541
94	21.1.3.1	RDF Companion Boiler at Kingston Fossil Plant (1x60 MW)	Mature Commercial	Base	60	14,000	Refuse-Derived Fuel	6	RDF Credit	$2,333
95	22.1.1.1	NUG - Generic IPP Pulverized Coal with Cogeneration (2x170 MW)	Mature Commercial	Base	340	9,900	Low Sulfur Coal	4	Steam	$0
96	23.1.2.1	Power Purchase - Base Load (1x300 MW)	Mature Commercial	Base	300	NA	NA	0	0	$0
97	23.1.2.2	Power Purchase - Peaking (1x300 MW)	Mature Commercial	Peaking	300	NA	NA	0	None	$0
98	23.1.3.1	NUG - Generic IPP Run of River Hydro (4x20 MW)	Mature Commercial	Base	80	N/A	NA	4	None	$0
99	24.1.1.1	Unit Power Purchase 15 Year	Mature Commercial	Base	400	NA	NA	0	None	$0
100	24.1.1.2	Partially Complete Pulverized Coal Plant (1x710 MW)	Mature Commercial	Base	710	9,600	High Sulfur Coal	5	None	$888
101	25.1.2.1	Repowering Allen Fossil Plant with Natural Gas/ Combined Cycle (1x705 MW)	Initial Commercial	Intermediate	705	7,200	Natural Gas	4	None	$449
102	25.3.1.1	Repowering Allen Fossil Plant with IGCC (1x500 MW)	Initial Commercial	Base	500	8,200	High Sulfur Coal	7	0	$1,318
103	26.1.3.1	Biomass Cofiring - Customer Service	Initial Commercial	Base	See Note 1	Same as Existing Unit	See Note 1	1	None	$0.36
104	26.2.3.1	Biomass Cofiring - Low Level	Initial Commercial	Base	See Note 2	Same as Existing Unit	See Note 2	1	None	$2.70
105	26.3.3.1	Biomass Cofiring - Emissions Reduction (<$5/Ton CO_2)	Initial Commercial	Base	See Note 3	Same as Existing Unit	See Note 3	1	None	$3.10
106	28.2.3.2	Biomass Cofiring - Moderate Level at Colbert Fossil Plant Unit 5	Initial Commercial	Base	See Note 4	Same as Existing Unit	See Note 4	2	None	$20.10
107	29.1.5.1	NUG - Generic IPP Pumped-Hydro Storage	Initial Commercial	Peaking	1,000	NA	NA	0	None	$0

Note 1: This option applies to JSF,CUF,BRF,ALF,SHF1-9. There are no capacity changes from the current units. The capital cost is to add the cofiring capability. Adjustments should be made as follows: Fuel Cost =(Current Unit Coal Cost)*(1-.0031)+$0.60*.0031. Fixed O&M Costs=Current Unit+$0.09/kW. SO_2 Emissions=Current Unit Coal Emissions*(1-.0031). CO_2 Emissions=Current Unit Emissions*(1-.0031)-322*.0031. These adjustments reflect a 0.31% biomass energy input. All other cost and performance are same as current units.

Note 2: This option applies to COF1-4,GAF,JOF,KIF,PAF. There are no capacity changes from the current units. The capital cost is to add the cofiring capability. Adjustments should be made as follows: Fuel Cost =(Current Unit Coal Cost)*(1-.012)+$0.77*.012. Fixed O&M Costs=Current Unit+$0.09/kW. SO_2 Emissions=Current Unit Coal Emissions*(1-.012). CO_2 Emissions=Current Unit Emissions*(1-.012)-322*.012. These adjustments reflect a 1.2% biomass energy input. All other cost and performance are same as current units.

COST CHARACTERISTICS					ENVIRONMENTAL AND OTHER CHARACTERISTICS					
Fuel Cost ($/MMBtu)	Base Fixed Operating & Maintenance ($/kW-Yr)	Base Variable Operating & Maintenance (Mills/kWh)	Base Fixed Additions & Improvements ($/kW-Yr)	Base Decommissioning Cost ($ Million)	Sulfur Dioxide (lb/MMBtu)	Nitrogen Oxides (lb/MMBtu)	Carbon Dioxide (lb/MMBtu)	Thermal Discharge (MMBtu/MWh)	Solid Waste (lb/MMBtu)	Economic Development 1 (Annual Average Employment)
NA	$225.00	17	$0.00	$0	0.056	0.03	205	0	9.48	NA
$1.38	$29.50	0.3	$11.20	$0	1.2	0.8	205	7.73	9.48	NA
($1.54)	$83.00	1.8	$58.00	$0	0.07	0.1	0	9.05	21.43	132
($1.54)	$90.00	5.8	$0.00	$0	0.07	0.1	0	9.05	21.43	NA
$1.00	$10.90	1.5	$19.90	$0	0.05	0.03	205	4.51	9.48	NA
($1.54)	$90.00	5.8	$0.00	$0	0.07	0.1	0	9.05	21.43	NA
NA	$200.00	12	$0.00	$0	0.24	0.1	210	0	0	NA
NA	$114.50	22	$0.00	$0	0	0.1	115	0	0	0
NA	$33.60	31.8	$0.00	$0	0	0.1	115	0	0	0
NA	$50.00	17	$0.00	$0	0	0	0	0	0	160
NA	$42.60	19.7	$0.00	$0	0.6	0.7	205	0	0	NA
$1.00	$24.00	0.6	$16.20	$0	0.3	0.15	210	0	24.02	513
$2.48	$4.00	1.3	$5.40	$0	0	0.08	115	0.45	0	144
$1.00	$15.30	0.9	$19.00	$0	0.05	0.03	205	3.89	9.48	NA
See Note 1	See Note 1	Same as Existing Unit	Same as Existing Unit	$0	See Note 1	Same as Existing Unit	See Note 1	Same as Existing Unit	Same as Existing Unit	NA
See Note 2	See Note 2	Same as Existing Unit	See Note 2	$0	See Note 2	Same as Existing Unit	See Note 2	Same as Existing Unit	Same as Existing Unit	NA
See Note 3	See Note 3	Same as Existing Unit	See Note 3	$0	See Note 3	Same as Existing Unit	See Note 3	Same as Existing Unit	Same as Existing Unit	NA
See Note 4	See Note 4	Same as Existing Unit	See Note 4	$0	See Note 4	Same as Existing Unit	See Note 4	Same as Existing Unit	Same as Existing Unit	NA
NA	$151.20	33.8	$0.00	$0	0	0	0	0	0	NA

Note 3: This option applies to all plants. There are no capacity changes from the current units. The capital cost is to add the cofiring capability. Adjustments should be made as follows: Fuel Cost =(Current Unit Coal Cost)*(1-.0125)+$0.764*.0125. Fixed O&M Costs=Current Unit+$0.09/kW. SO_2 Emissions=Current Unit Coal Emissions*(1-.0125). CO_2 Emissions=Current Unit Emissions*(1-.0125)-322*.0125. These adjustments reflect a 1.25% biomass energy input. All other cost and performance are same as current units.

Note 4: This option applies to all COF5 only. There are no capacity changes from the current units. The capital cost is to add the cofiring capability. Adjustments should be made as follows: Fuel Cost =(COF5 Coal Cost)*(1-.10)+$0.73*.10. Fixed O&M Costs=COF5 Cost+$0.13/kW. SO_2 Emissions=COF5 Emissions*(1-.10). CO_2 Emissions=COF5 Emissions*(1-.10)-322*.10. These adjustments reflect a 10% biomass energy input. All other cost and performance are same as COF5.

1 Calculated for selected options only

FIGURE T6-2. **Flexible TVA Supply-Side Options**

Number	ID Number	Option	Original Schedule (Yrs)	Accelerated Schedule (Yrs)	Cost to Obtain Accelerated Schedule ($/kW)	Cost Remaining ($/kW)
1	1.1.1.1.F	Supercritical Pulverized Coal-Fired Plant (1X300 MW)	8	3	$35	$1,579
2	1.1.1.2.F	Supercritical Pulverized Coal-Fired Plant (4X300 MW)	8	3	$10	$1,335
3	1.1.1.3.F	Atmospheric Fluidized Bed Combustion Repowering, Generic (1X125 MW)	6	3	$73	$1,046
4	1.1.1.4.F	Circulating Atmospheric Fluidized Bed Combustion Plant (1x200 MW)	8	3	$60	$1,426
5	1.1.1.5.F	Subcritical Pulverized Coal-Fired Plant (4x300 MW)	8	3	$8	$1,405
6	1.1.2.1.F	Simple Cycle Combustion Turbine Plant (1x150 MW)	5	1.5	$22	$338
7	1.1.2.2.F	Natural Gas-Fired Combined Cycle Plant (1x470 MW)	5	2	$14	$641
8	1.1.2.3.F	Combined Cycle Repowering, Generic (1x425 MW)	4	2	$14	$473
9	1.1.2.4.F	Small Cogeneration Combined Cycle Plant (3x10 MW)	4	1.5	$76	$1,044
10	1.1.2.5.F	Small Combined Cycle Plant (1X42 MW)	4.5	1.5	$59	$741
11	1.1.3.1.F	Refuse-Derived Fuel-Fired Stoker (1x40 MW)	8	3	$152	$5,588
12	1.1.5.1.F	Lead Acid Battery Energy Storage (1x20 MW)	3	1.5	$72	$506
13	1.2.1.1.F	State-of-the-Art Pulverized Coal-Fired Plant (1x400 MW)	8	4	$33	$1,384
14	1.2.2.1.F	Compressed Air Energy Storage with Humidification (3x337 MW)	7	3	$12	$303
15	1.2.2.2.F	Compressed Air Energy Storage with Recuperation (3x337 MW)	7	3	$11	$327
16	1.2.3.1.F	Biomass Whole Tree Energy Boiler Power Plant (1x100 MW)	8	3	$95	$1,417
17	1.3.1.1.F	First Generation Pressurized Fluidized Bed Combustion Repowering, Generic (1x156 MW)	6	3	$67	$1,100
18	1.3.1.2.F	First Generation Pressurized Fluidized Bed Combustion (1x340 MW)	8	3	$38	$1,243
19	1.3.1.3.F	Integrated Gasification Compressed Air Storage with Humidification (1x410 MW)	8	4	$36	$1,456
20	1.3.1.4.F	Integrated Gasification Combined Cycle with Fertilizer Coproduction (3x227 MW)	8	3.5	$23	$2,218
21	1.3.1.5.F	Integrated Gasification Combined Cycle (3x245 MW)	8	3.5	$18	$1,506
22	1.3.1.6.F	Compressed Air Storage with Humidification with Integrated Gasification & Natural Gas Peaking (1x850 MW)	8	4	$14	$858
23	1.3.1.7.F	Advanced Pressurized Fluidized Bed Combustor with Development Cost (1x300 MW)	8	3	$46	$1,472
24	1.3.1.8.F	Advanced Pressurized Fluidized Bed Combustor with No Development Cost (1x300 MW)	8	3	$42	$1,204
25	1.3.2.1.F	Fuel Cell - Molten Carbonate or Solid Oxide (1x2 MW)	4	1.5	$262	$772

FIGURE T6-2. **Flexible TVA Supply-Side Options** *CONTINUED*

Number	ID Number	Option	Original Schedule (Yrs)	Accelerated Schedule (Yrs)	Cost to Obtain Accelerated Schedule ($/kW)	Cost Remaining ($/kW)
26	1.3.2.2.F	Intercooled Aeroderivative Combustion Turbine (1x125 MW)	5	1.5	$36	$431
27	1.3.2.3.F	Cascaded Humidified Advanced Turbine (F Series CT) (1x288 MW)	6	2.5	$26	$477
28	1.3.2.4.F	Integrated Gasification Cascaded Humidified Advanced Turbine with Coproduction (F Series CT) (2x303 MW)	8	3.5	$21	$1,718
29	1.3.2.5.F	Integrated Gasification Cascaded Humidified Advanced Turbine (F Series CT) (2x303 MW)	8	3.5	$21	$1,222
30	1.3.2.6.F	Cascaded Humidified Advanced Turbine (G Series CT) (1x400 MW)	6	2.5	$20	$457
31	1.3.2.7.F	Integrated Gasification Cascaded Humidified Advanced Turbine with Coproduction (G Series CT) (2x420 MW)	8	3.5	$15	$1,607
32	1.3.2.8.F	Integrated Gasification Cascaded Humidified Advanced Turbine (G Series CT) (2x420 MW)	8	3.5	$15	$1,111
33	1.3.2.9.F	Integrated Fuel Cell/Combustion Turbine (1x2.5 MW)	4	1.5	$183	$1,057
34	1.3.3.1.F	Large Solar-Photovoltaic - Fixed Flat Plate (1x50 MW)	7	3	$111	$2,921
35	1.3.3.2.F	Landfill Methane (1x2 MW)	3	1.5	$205	$829
36	1.3.3.3.F	Coalbed Methane (1x2 MW)	3	1.5	$182	$852
37	1.3.5.1.F	Advanced Battery Energy Storage (1x20 MW)	3	1.5	$68	$423
38	1.3.5.2.F	Superconducting Magnetic Energy Storage (1x500 MW)	8	4	$26	$751
39	2.1.3.1.F	Additional Hydro Generation at Existing Nonpower Projects (1x10 MW)	5	3	$266	$2,194
40	2.1.3.2.F	Additional Hydro Generation at Existing Projects (1x24 MW)	6	3	$132	$4,156
41	2.1.3.3.F	Additional Hydro Generation - New Conventional Projects (1x65 MW)	9	5	$224	$8,529
42	4.1.1.1.F	Lignite-Fired Circulating Fluidized Bed Combustion Plant (1x200 MW)	7	3	$59	$1,541
43	6.3.2.7.F	Gas Turbine - Modular Helium Reactor (3x289 MW)	13	6	$28	$2,094
44	6.3.4.1.F	Advanced Light Water Reactor (1x1300 MW)	10	6	$18	$1,822
45	7.1.1.1.F	Bellefonte Repowering with Integrated Gasification Combined Cycle (9x250 MW)	9	3.5	$6	$1,478
46	7.1.1.2.F	Bellefonte Repowering with Pulverized Coal (4x616 MW)	11	4	$5	$1,258
47	7.1.1.3.F	Bellefonte Repowering - Phased Combined Cycle/IGCC - Phase A - Combined Cycle (9x222 MW)	8	2.5	$4	$547
48	7.1.1.4.F	Bellefonte Repowering - Phased Combined Cycle/IGCC - Phase B - IGCC (9x250 MW)	7	3	$4	$1,551
49	7.1.1.5.F	Bellefonte Repowering - IGCC with Coproduction (11x229 MW)	11	3.5	$6	$1,851
50	7.1.1.6.F	Bellefonte Repowering - IGCC with Coproduction with Partners (2x242 MW)	8	3.5	$20	$445
51	7.1.2.1.F	Bellefonte Repowering - Natural Gas Combined Cycle (10x222 MW)	8	2.5	$3	$472

FIGURE T6-2. **Flexible TVA Supply-Side Options** *CONTINUED*

Number	ID Number	Option	Original Schedule (Yrs)	Accelerated Schedule (Yrs)	Cost to Obtain Accelerated Schedule ($/kW)	Cost Remaining ($/kW)
52	10.1.2.1.F	Inlet Air Precooling with Storage (16x61 MW)	3	1	$2	$49
53	10.1.2.2.F	New Combustion Turbine at Johnsonville to Supply Steam to DuPont (1x174 MW)	4	2	$34	$1,079
54	10.1.2.3.F	Repowering One of Johnsonville Fossil (JOF) Units 7-10 with Natural Gas/Combined Cycle (1x465 MW)	4	2	$13	$468
55	10.3.1.1.F	Repowering One of JOF Units 1-6 with IGCC (1X242 MW)	7	3.5	$50	$1,420
56	10.3.1.2.F	Repowering One of JOF Units 7-10 with IGCC (1x250 MW)	7	3.5	$48	$1,392
57	11.1.5.1.F	Laurel Branch Pumped-Hydro Storage (4x386 MW)	10	7	$9	$1,111
58	14.1.3.1.F	Wind - 33 Meter Variable Speed Advanced Wind Turbine (285x0.35 MW)	6	2	$45	$1,011
59	14.3.3.1.F	Wind - 39 Meter Variable Speed Advanced Wind Turbine (444x0.45 MW)	6	2	$24	$934
60	15.1.5.1.F	Reynolds Creek Pumped-Hydro Storage (3x366 MW)	10	7	$13	$1,485
61	16.1.5.1.F	Raccoon Mountain - Pumped-Hydro Energy Storage Addition (3x255 MW)	10	7	$13	$1,025
62	16.1.5.2.F	Raccoon Mountain Pumped-Storage Modernization	6	2	$1	$19
63	17.1.5.1.F	Rorex Creek Pumped-Hydro Storage (3x292 MW)	10	7	$15	$1,060
64	18.1.1.1.F	Shawnee Unit 11 (1x168 MW)	5	2.5	$30	$531
65	20.1.1.1.F	Restart One Unit of Watts Bar Fossil Plant (1x56 MW)	6	2.5	$86	$489
66	20.1.3.1.F	RDF - Fluidized Bed Combustion Repowering of One Unit of Watts Bar Fossil Plant (1x56 MW)	6	3	$136	$2,415
67	20.3.1.1.F	Repowering Two Units of Watts Bar Fossil Plant with IGCC (1x242 MW)	7	3.5	$48	$1,492
68	25.1.2.1.F	Repowering Allen Fossil Plant with Natural Gas/Combined Cycle (1x705 MW)	4	2	$9	$440
69	25.3.1.1.F	Repowering Allen Fossil Plant with IGCC (1x500 MW)	7	3.5	$24	$1,294

Option 1.1.1.1

SUPERCRITICAL PULVERIZED COAL-FIRED PLANT (1X300 MEGAWATTS)

This option is technically similar to the subcritical pulverized coal (PC)-fired plant, option 1.1.1.5, with the exception that the supercritical boiler operates at supercritical pressures of greater than 3,200 pounds per square inch. The properties of water at supercritical pressures are such that there is no discrete phase change from liquid water to steam as the fluid temperature is raised. Therefore, there is no need for a boiler drum for steam separation to occur as there is in a subcritical boiler. The supercritical PC boiler is a once-through design. The higher pressure steam cycle provides greater efficiency. The final main steam and reheat steam temperatures are 1,000°F.

The relatively high capital cost, low fuel cost, and high efficiency of the modern supercritical PC power plant make it a promising candidate for base-load capacity additions.

The cost and performance data are based on information from Electric Power Research Institute's Technical Assessment Guide.

Option 1.1.1.2

SUPERCRITICAL PULVERIZED COAL-FIRED PLANT (4X300 MEGAWATTS)

This option is similar to the 1 X 300-megawatt supercritical pulverized coal-fired plant, option 1.1.1.1, except for the plant capacity. The 4 X 300-megawatt plant will have capital cost savings, on a dollar-per-kilowatt basis, relative to the single unit plant due to common facilities shared by each unit.

The cost and performance data are based on information from Electric Power Research Institute's Technical Assessment Guide. The Technical Assessment Guide procedures were used to determine cost adjustments for a multiple-unit plant.

Option 1.1.1.3

ATMOSPHERIC FLUIDIZED BED COMBUSTION REPOWERING, GENERIC (1X125 MEGAWATTS)

Option 1.1.1.4, which follows, describes the atmospheric fluidized bed combustion (AFBC) boiler and other systems. One or more existing coal-fired boilers could be retired and replaced with an AFBC boiler. For each retired boiler, one AFBC boiler would be installed. Steam generated in the AFBC boiler would power the existing steam turbine. The efficiency and capacity of the repowered unit would be approximately the same as the original unit.

The steam cycle systems, plant infrastructure, transmission facilities, fuel-handling facilities, and a permitted site would be reused. Therefore, the capital cost of repowering would be less than that for a greenfield AFBC unit of similar capacity. Repowering costs are very site-specific. The cost advantage of a repowering installation over a greenfield installation will depend on site characteristics.

Sulfur capture in the AFBC boiler would allow a range of fuels to be burned. High sulfur coal would be the design fuel.

Cost and performance data are based on an AFBC repowering proposal presented to TVA, with adjustments to reflect results from Electric Power Research Institute repowering studies.

Option 1.1.1.4

CIRCULATING ATMOSPHERIC FLUIDIZED BED COMBUSTION PLANT (1X200 MEGAWATTS)

Fluidized bed combustion (FBC) has attracted interest in the electric utility industry in the last decade due to its ability to meet sulfur dioxide (SO_2) and nitrogen oxides (NO_X) emissions standards without the need for add-on control equipment. Atmospheric FBC is now considered a commercial technology for utility applications in unit sizes up to about 200 megawatts. The AFBC option is based on the subcritical circulating FBC concept.

Crushed coal and limestone are injected at the bottom of the FBC furnace. SO_2 released from the coal combustion reacts with the calcium in the limestone to form a solid byproduct. The amount of sulfur captured in the process depends on the amount of limestone added. The furnace temperature is maintained in the optimum range for this reaction, 1500-1600°F. This relatively low temperature, compared to a pulverized coal furnace, reduces the formation of NO_X.

Fluidizing air from the forced draft fans and air heater is introduced from below the furnace to provide combustion air and maintain the fuel/limestone mixture in a well-mixed state throughout the height of the furnace. Solids that are carried out of the furnace are captured in a cyclone separator and recycled to the furnace to maximize carbon burnout and sulfur capture. The partially cleaned flue gas exits the cyclone into a convection pass, where additional heat transfer surfaces for steam superheating and reheating are located. An economizer surface is located near the exit of the convection pass. The flue gas passes through an air heater before final particulate collection in a fabric filter. Cleaned flue gas is exhausted to the atmosphere.

Heated feedwater is pumped from the steam turbine condenser to the boiler economizer. The feedwater then enters the boiler drum from which it is distributed to the waterwall furnace enclosure in which steam generation occurs. The steam/water mixture from the waterwalls re-enters the drum, where steam separation takes place. The steam is superheated in the boiler before exiting to the turbine. The final main steam pressure and

temperature are 2,400 pounds per square inch and 1,000°F, respectively. To increase efficiency, the steam is reheated after partial expansion in the steam turbine to 1,000°F.

Energy in the steam is converted to electrical energy by the turbine-generator. The turbine exhaust steam is condensed and pumped back to the boiler through a series of feedwater heaters. Heat is rejected from the condenser cooling water to the atmosphere in a mechanical draft cooling tower.

Ash, consisting of coal ash and limestone products (including the captured sulfur), is removed from the fabric filter and the furnace bottom and disposed of on-site.

Sulfur capture in the AFBC boiler would allow a range of fuels to be burned. High sulfur coal is the design fuel for the AFBC option.

The relatively high capital cost, low fuel cost, and relatively high efficiency of the AFBC plant make it a candidate for base-load capacity additions.

The cost and performance data are based on information from Electric Power Research Institute's Technical Assessment Guide.

Option 1.1.1.5

SUBCRITICAL PULVERIZED COAL-FIRED PLANT (4X300 MEGAWATTS)

The pulverized coal (PC)-fired boiler with steam turbine power generation is currently the principal electricity generation technology in the United States.

Coal is delivered from on-site storage or receiving facilities to day bunkers in the powerhouse. From the day bunkers, coal is metered to the pulverizers, where it is ground to a very small particle size. The pulverized coal is air-conveyed to burners penetrating the walls of the furnace. This conveying air, as well as the remainder of the combustion air, is provided by the forced draft fans through an air heater. The air heater recovers heat from the flue gas exiting the boiler prior to the gas being exhausted to the atmosphere.

Heated feedwater is pumped from the turbine condenser to the boiler economizer in which energy is recovered from the flue gas prior to the gas exiting the boiler. The feedwater then enters the boiler drum from which it is distributed to the waterwall furnace enclosure in which steam generation occurs. The steam/water mixture from the waterwalls re-enters the drum, where steam separation takes place. The steam is superheated in the boiler before exiting to the turbine. Energy in the steam is converted to electrical energy by the turbine-generator. To increase efficiency, the steam is reheated after partial expansion in the steam turbine and readmitted to the turbine. The turbine exhaust steam is condensed and pumped back to the boiler as feedwater through a series of feedwater heaters. Heat is rejected from the condenser cooling water to the atmosphere in a mechanical draft cooling tower. For the subcritical PC option, the final main steam pressure, main steam temperature, and reheat temperature are 2,400 pounds per square inch, 1,000°F, and 1,000°F, respectively.

Selective catalytic reduction (SCR), located in the region of the boiler where flue gas temperature is optimal for nitrogen oxides (NO_X) reduction, is used to control NO_X emissions. A fabric filter located downstream of the air heater controls particulate emissions. Sulfur dioxide (SO_2) emissions are controlled with a limestone flue gas desulfurization (FGD) system, or scrubber. The cleaned flue gas is exhausted to the atmosphere. Ash collected in the fabric filter and gypsum from the FGD system are disposed of on-site.

This option is based on a total 1,200-megawatt capacity, four-unit plant. Each unit has a 300-megawatt capacity. Multiple-unit plants offer capital cost savings on a dollar-per-kilowatt basis compared to single-unit plants due to common facilities, such as fuel handling, transmission facilities, and others that are shared by each unit.

High sulfur coal is the design fuel for the subcritical PC option.

The relatively high capital cost, low fuel cost, and relatively high efficiency of the modern subcritical PC power plant make it a candidate for base-load capacity additions.

Cost and performance data are based on TVA estimates and historical performance.

Option 1.1.2.1

SIMPLE CYCLE COMBUSTION TURBINE PLANT (1X150 MEGAWATTS)

A simple cycle combustion turbine (CT) generator consists of an air compressor, combustor, and expansion turbine. Gaseous or liquid fuels are burned under pressure in the combustor. The hot, high pressure combustion products expand through the turbine. The turbine drives the air compressor, as well as an electric generator. The electric generator converts the mechanical energy produced by the turbine into electrical energy. Gases from the expansion turbine are exhausted to the atmosphere.

The primary fuel will be natural gas with fuel oil as the back-up fuel.

The major emissions from combustion turbines fired with natural gas are nitrogen oxides (NO_X). To reduce NO_X emissions, dry, low NO_X burners would be used. As natural gas contains negligible amounts of sulfur, sulfur dioxide (SO_2) emissions are essentially zero. Because of the higher hydrogen content of the natural gas fuel relative to coal, carbon dioxide (CO_2) emissions on an energy input basis will be lower than the emissions for coal-based technologies.

Combustion turbine efficiency is strongly affected by CT firing temperature. This option reflects the current generation of advanced CTs operating at a firing temperature of 2,350°F.

Several features of simple cycle CTs, including their relatively low capital cost, short construction times, low emissions, rapid start-up times, relatively high fuel costs (compared with coal), and relatively low efficiency (compared to combined cycle CTs and most modern coal-based technologies), make this technology attractive for peaking capacity additions.

The cost and performance data are based on information provided by a combustion turbine supplier.

Option 1.1.2.2

NATURAL GAS-FIRED COMBINED CYCLE PLANT (1X470 MEGAWATTS)

The combined cycle power plant consists of a combustion turbine (CT) generator, option 1.1.2.1, and a steam turbine-generator. The hot exhaust gases from the CT pass through a heat recovery steam generator (HRSG). The HRSG reduces the CT exhaust from about 1,100°F to about 300°F before it is exhausted to the atmosphere. Steam raised in the HRSG powers the steam turbine-generator. Steam turbine exhaust is condensed and pumped back to the HRSG as feedwater. Heat is rejected from the condenser cooling water to the atmosphere in a mechanical draft cooling tower. The CT provides about two-thirds of the generated power and the steam turbine about one-third. The heat recovery from the CT exhaust provides an efficiency improvement over the simple cycle CT.

The primary fuel will be natural gas with fuel oil as the back-up fuel.

Nitrogen oxides (NO_X) emissions from the combined cycle CT will be controlled by selective catalytic reduction (SCR). Optimal performance of the SCR requires a relatively narrow gas temperature range. The SCR will be installed in the region of the HRSG, where the gas temperature is optimum for SCR performance. Sulfur dioxide emissions from the natural gas fuel would be essentially zero. The high efficiency and natural gas fuel combine to produce relatively low carbon dioxide (CO_2) emissions.

Features of the combined cycle CT option, including its high efficiency, moderate capital cost, relatively high fuel cost, low emissions, and short construction time make this technology a candidate for intermediate capacity additions.

The cost and performance data are based on information provided by a combined cycle CT supplier.

Option 1.1.2.3

COMBINED CYCLE REPOWERING, GENERIC (1X425 MEGAWATTS)

Repowering coal-fired generating units may in some cases provide operating cost savings, emissions reductions, capacity addition, and life extension of existing power-generating facilities. TVA has several low efficiency, relatively low capacity (less than 125 megawatts), aging coal-fired generating units for which repowering may be advantageous.

For each retired coal-fired boiler, two natural gas-fired combustion turbines (CT) and heat recovery steam generators (HRSG) would be installed at the plant site. The steam raised in the HRSGs would power the existing steam turbine that was previously powered by the coal-fired boiler. The HRSGs would be designed to provide steam that matches the conditions of the steam turbine. The turbine exhaust is condensed and pumped back to the HRSG as feedwater. If the capacity of the steam turbine is maintained, the additional capacity of the CTs provides a total repowered unit capacity approximately three times that of the unit prior to repowering.

Steam cycle systems, plant infrastructure, transmission facilities, and a permitted site would be reused. Therefore, capital costs for repowering would be less than for a greenfield plant of similar capacity. Repowering costs are very site-specific. The cost advantage of a repowering installation over a greenfield installation depends on site characteristics. Combined cycle repowering would provide efficiency improvement relative to the unit prior to repowering. Efficiency would not likely be as high as for a greenfield combined cycle CT plant.

Nitrogen oxides (NO_X) emission control by selective catalytic reduction (SCR) and negligible sulfur dioxide (SO_2) emissions associated with the natural gas fuel would result in lower emissions of these gases relative to the unit prior to repowering. The fuel switch to natural gas and the higher efficiency relative to the unit prior to repowering would result in lower carbon dioxide emissions.

The cost and performance data are based on information provided by a combined cycle combustion turbine supplier. Costs were based on CT selection and HRSG design that would fully repower a specific steam turbine. Other applications of this option are considered to be similar.

Option 1.1.2.4

SMALL COGENERATION COMBINED CYCLE PLANT (3X10 MEGAWATTS)

The small cogeneration combined cycle plant consists of three small combustion turbines (approximately 10 megawatts each), with each combustion turbine exhausting flue gas into separate heat recovery steam generators. The steam conditions

from the steam generators are driven by the pressure and temperature requirements of the steam host. Either a condensing steam turbine or a backpressure steam turbine may be added to the configuration to provide low pressure steam at various pressure levels if required by the steam host. The combustion turbines can be fired by either natural gas or #2 fuel oil.

Each combustion turbine/heat recovery steam generator pair can produce 37,000 pounds of steam per hour without duct firing. Thus, the small cogeneration combined cycle plant can produce in excess of 100,000 pounds of steam per hour. The addition of duct firing can raise the amount of steam produced significantly, but at the expense of the higher steam production cost due to fuel used by the duct burners.

The cost and performance information provided are based upon data from Black & Veatch on their "Instant Power Station" joint venture with Solar Turbines. The primary advantage of this type of plant is its very short lead time.

Option 1.1.2.5

SMALL COMBINED CYCLE PLANT (1X42 MEGAWATTS)

The small combined cycle plant consists of three small combustion turbines (CT), approximately 10 megawatts each, with each combustion turbine exhausting flue gas into separate heat recovery steam generators. The steam from the three steam generators is passed to a single condensing steam turbine (ST) bottoming cycle. The steam cycle heat rejection is through cooling towers. The combustion turbines can be fired by either natural gas or #2 fuel oil.

The small combined cycle plant can produce approximately 42 megawatts of electricity at ISO (International Standards Organization) conditions. The addition of duct firing can raise the amount of steam produced significantly, thus increasing power output, but at a higher steam production cost due to fuel used by the duct burners.

The cost and performance information provided is based upon data from Black & Veatch on their "Instant Power Station" joint venture with Solar Turbines. The primary advantage of this type of plant is its very short lead time.

Option 1.1.3.1

REFUSE-DERIVED FUEL-FIRED STOKER (1X40 MEGAWATTS)

Option 20.1.3.2

REFUSE-DERIVED FUEL COMPANION BOILER AT WATTS BAR FOSSIL PLANT (1X60 MEGAWATTS)

Option 21.1.3.1

REFUSE-DERIVED FUEL COMPANION BOILER AT KINGSTON FOSSIL PLANT (1X60 MEGAWATTS)

The refuse-derived fuel-fired power plant consists of both the refuse-derived fuel (RDF) preparation facility and the RDF-fired stoker boiler power plant.

After the removal and recycling of about 20 percent of the material from the raw municipal solid waste (MSW), the remaining MSW is delivered by truck to the tipping floor of the on-site RDF preparation facility. The production facility consists of three parallel trains, each sized to process about 100 tons of MSW per hour over five days per week. The waste passes through a sequence of process steps, including flail milling, trommel screening, magnetic separation, and size reduction to produce RDF containing about 12 percent ash and 5,900 Btu per pound higher heating value (HHV). The RDF is stored in a live-bottom hopper and transported by conveyor as needed to the power plant, where it is injected by spreaderstoker and burns both in suspension and on the grate. The steam conditions are 900 pounds per square inch and 830°F. The remainder of the plant includes waterwall and convective heat transfer surfaces, a steam turbine generator, a mechanical draft cooling tower, an ammonia thermal de-NO_X (nitrogen oxides) system, a lime spray dryer scrubber, a baghouse, fans, and ash disposal.

The 40-megawatt RDF preparation and stoker power plant consumes 1,736 tons of MSW per day, delivered to the plant after recycling off-site about 400 tons per day of paper, glass, metals, and other materials from 2,166 tons of raw MSW per day. The RDF preparation plant produces 1,396 tons of RDF per day, with a moisture content of 28.2 percent and 5,663 Btu per pound (HHV as received), which is consumed by the stoker boiler. The gross capacity is 46.2 megawatts, auxiliary power consumption is 6.2 megawatts, and the net plant heat rate at full load is 16,464 Btu per kilowatt-hour, based on the RDF fuel (20.7 percent thermal efficiency). *Figure T6-3* shows a diagram of an RDF preparation and stoker boiler power plant.

The companion boiler options produce steam for use in existing steam turbines. At Watts Bar, the companion boiler would displace an existing boiler to supply an existing steam turbine. At Kingston, the steam from the companion boiler would

FIGURE T6-3. **RDF Preparation and Stoker Boiler Power Plant**

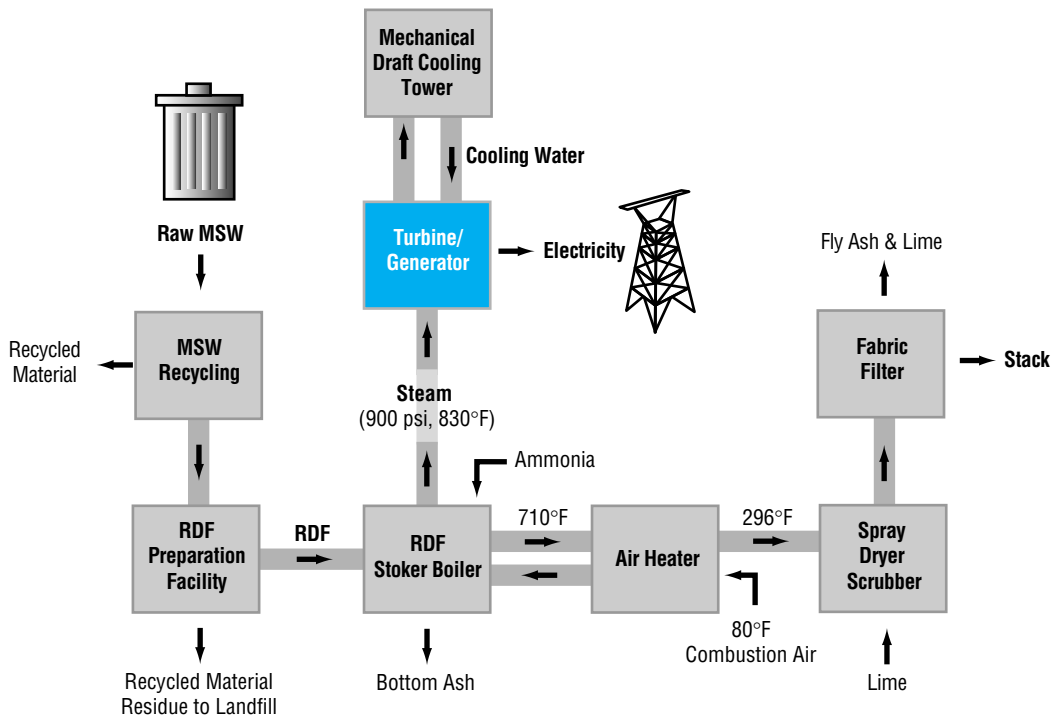

increase the steam flow to existing turbines to make use of excess turbine capacity. Since these options are rated at 60 megawatts, the quantities of RDF would be proportionally higher than for the 40-megawatt stoker option. Otherwise, the companion boiler options are similar to the RDF stoker option.

The cost and performance data are based on Electric Power Research Institute's Technical Assessment Guide.

Option 1.1.5.1

LEAD ACID BATTERY ENERGY STORAGE (1X20 MEGAWATTS)

Low cost, off-peak electricity would be used to charge the lead acid battery plant. The plant has a 20-megawatt capacity and a 2-hour discharge time. The battery plant would be used for heavy duty applications such as load leveling and frequency regulation with deep discharge.

Battery plants have a very rapid response time of less than one-tenth of a second to reach full load. Another advantage of battery plants is their siting flexibility. They could be located virtually anywhere, including in urban areas.

There would be no emissions associated with the battery plant itself; however, there would be emissions from the generation sources used to charge the plant.

The cost and performance data are based on information from Electric Power Research Institute's Technical Assessment Guide.

Option 1.2.1.1

STATE-OF-THE-ART PULVERIZED COAL-FIRED POWER PLANT (1X400 MEGAWATTS)

The state-of-the-art pulverized coal-fired power plant (SOAPP-PC) is a concept that is intended to be competitive with other advanced coal-fired technologies such as integrated gasification/combined cycle. Its basic performance and cost goals are to produce power at a heat rate in the low 8,000 Btu per kilowatt-hour range, have the same or lower operating and maintenance costs as a conventional pulverized coal (PC)-fired plant, and achieve this with the same or lower capital investment as a conventional PC-fired plant.

The SOAPP-PC concept is based on a supercritical double reheat steam cycle. The steam is at a 4,500 pounds per

FIGURE T6-4. **Schematic of CAES Plant with Air Humidification**

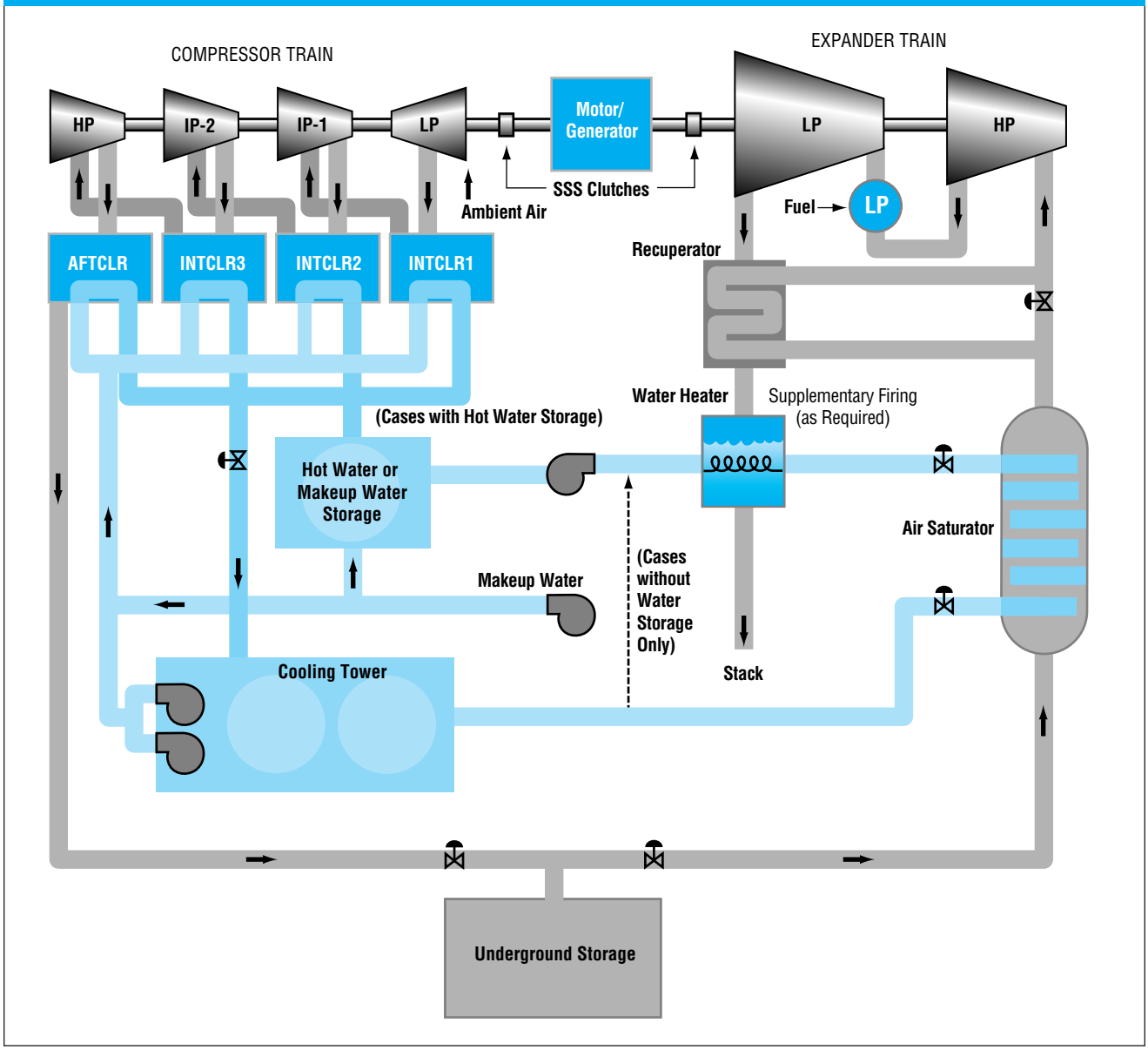

square inch gauge main steam pressure at 1,100°F. The first and final reheats are at 1,100°F. The steam generator has a spiral wound once-through design to minimize variations in heat absorption patterns. The cycle is equipped with nine stages of regenerative feedwater heating. The plant has conventional flue gas desulfurization and particulate removal, and is equipped with low nitrogen oxides (NO_X) burners and a selective catalytic reduction unit for NO_X control. Heat rejection is through a natural draft cooling tower.

The cost and performance information is obtained from Sargent & Lundy as part of their contract with Electric Power Research Institute to develop SOAPP designs for PC-fired and natural gas-fired combined cycle power plants.

Option 1.2.2.1

COMPRESSED AIR ENERGY STORAGE PLANT WITH HUMIDIFICATION (3X337 MEGAWATTS)

Option 1.2.2.2

COMPRESSED AIR ENERGY STORAGE PLANT WITH RECUPERATION (3X337 MEGAWATTS)

Compressed air energy storage (CAES) combines features from conventional combustion turbines and pumped-hydro storage.

During periods of relatively low electricity demand and, therefore, low power generation costs, air is compressed and stored in an underground reservoir. The equipment is analogous to the compressor used in a combustion turbine and the process is similar to the pumping and storing of water at a higher elevation in pumped hydro.

During periods of high electricity demand, the pressurized air from the underground reservoir is expanded through a high pressure turbine to produce power. The air enters a combustor where its temperature is raised, and then it expands through a low pressure turbine, producing additional power. The exhaust from the low pressure turbine goes to a recuperator to heat the air entering the high pressure turbine.

In CAES with humidification, the air entering the high pressure turbine is saturated with water vapor, which increases the mass flow through the turbines, and increases the amount of power produced per pound of air that has to be compressed. Again, this equipment is roughly analogous to the turbomachinery in a combustion turbine, and the process is similar to the power generation from water stored at a higher elevation in pumped hydro. *Figure T6-4* shows a schematic of a CAES plant with air humidification, and *Figure T6-5* shows a schematic of a conventional CAES plant.

Based on extensive studies of underground storage in the oil and natural gas industry, several geologies appear to be suitable for air storage: salt domes, aquifers including depleted natural gas fields, and hard rock.

The costs for this option assume storage in salt dome geology. The performance data are based on information from Electric Power Research Institute's Technical Assessment Guide.

Option 1.2.3.1

BIOMASS WHOLE TREE ENERGY™ BOILER POWER PLANT (1X100 MEGAWATTS)

The Whole Tree Energy™ (WTE) boiler is a new direct combustion technology being developed with support from Electric Power Research Institute and other sponsors for application in large-scale power production from energy crops. The WTE system involves the harvesting of stands of close-growing whole trees, transport by truck, tree storage, and drying using air heated by boiler flue gas, and combustion of the whole trees in a special deep bed burner at the bottom of the furnace.

FIGURE T6-5. **Schematic of Conventional CAES Plant**

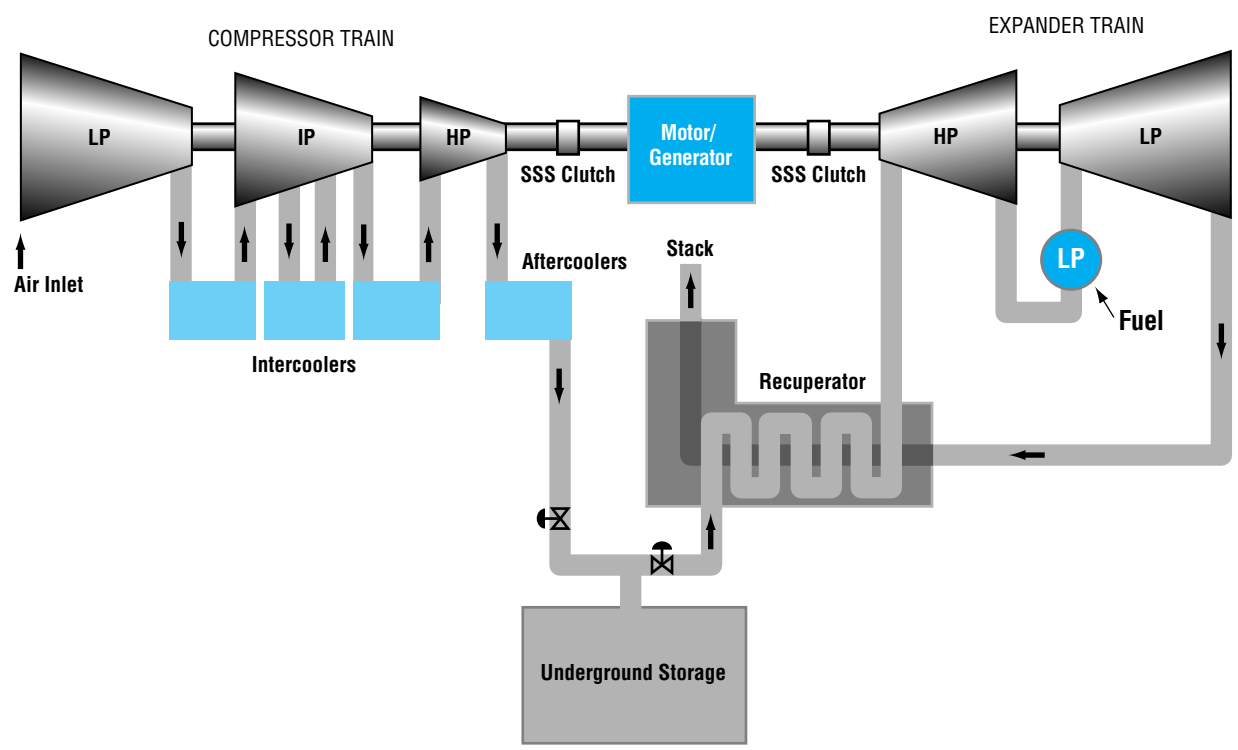

FIGURE T6-6. **Whole Tree Energy™ Boiler Power Plant**

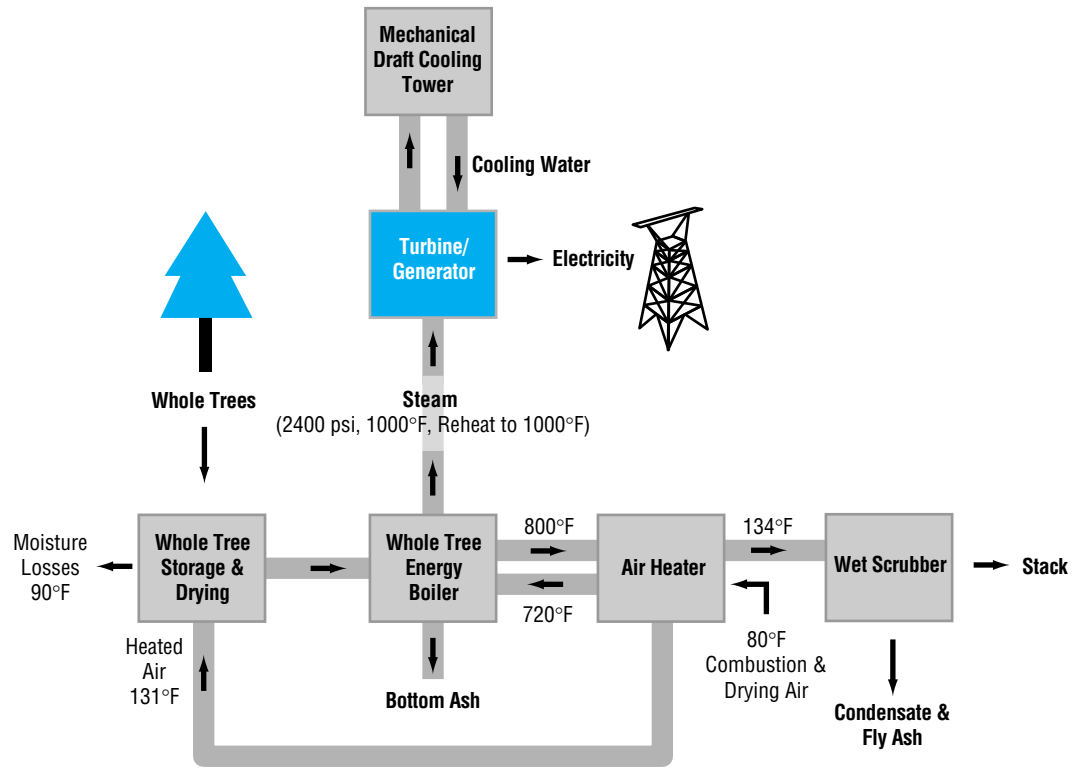

After harvesting and delivery to the plant, the whole trees are stacked in an annular ring in the air-supported fabric dome drying building. Air heated to about 130°F in the boiler air heater is injected under the pile to dry the trees from about 45 to 25 percent moisture content. After 30 days of storage and drying, the trees are removed, cut to uniform length, and loaded through a sealing access door into the deep-bed combustor. Air injected into the bottom of the bed is sufficient to burn out the remaining char, provide heat to drive off volatiles, and gasify the whole trees in the upper bed. Overfire air is injected into the furnace above the bed to complete combustion of the volatiles. The two-stage condensing heat exchanger at the boiler exit cools the flue gases from about 800°F to 134°F, and heats the combustion air to 721°F and wood drying air to 131°F before transport to the drying building. A portion of the flue gas moisture condenses in the second stage and is collected, along with the fly ash, in a wet scrubber. The plant has main steam pressure and temperature of 2,400 pounds per square inch absolute and 1,000°F, with a reheat steam temperature of 1,000°F to achieve maximum thermal efficiency. Other plant components include the ammonia de-NO_X (nitrogen oxides) system, generator, cooling tower, and fans. Due to the relatively low gas velocity in the deep bed combustor, about 60 percent of the wood ash remains behind in the combustor, and the remainder is discharged as fly ash. *Figure T6-6* shows a diagram of a Whole Tree Energy™ boiler power plant

The 100-megawatt Whole Tree Energy™ boiler power plant receives about 2,642 tons of whole trees per day, and after the 30-day drying period, fires about 1,887 tons of dried trees per day. Gross capacity is 107.5 megawatts, auxiliary power consumption is 7.5 megawatts, and the net plant heat rate at full load is 10,654 Btu per kilowatt-hour (32 percent thermal efficiency).

The cost and performance data are based on information from Electric Power Research Institute's Technical Assessment Guide.

Option 1.3.1.1

FIRST GENERATION PRESSURIZED FLUIDIZED BED COMBUSTION REPOWERING, GENERIC (1X156 MEGAWATTS)

Option 1.3.1.2, below, describes the pressurized fluidized bed combustion (PFBC) boiler and other systems. One or more existing coal-fired boilers could be retired and replaced with a PFBC boiler. For each retired boiler, one PFBC boiler, hot gas filter, and expansion turbine would be installed. Steam generated in the PFBC boiler would power the existing steam turbine. The addition of the gas expansion turbine would result in a net capacity increase of approximately 20 percent. The repowered unit efficiency would be improved by about 20 percent. The efficiency would not likely be as high as a greenfield PFBC unit.

Steam cycle systems, plant infrastructure, transmission facilities, fuel handling facilities, and a permitted site would be reused. Therefore, the capital cost for repowering would be less than for a greenfield PFBC unit of similar capacity. Repowering costs are very site-specific. The cost advantage of a repowering installation over a greenfield installation depends on site characteristics.

Sulfur capture in the PFBC boiler would allow a range of fuels to be burned. High sulfur coal would be the design fuel.

Cost and performance data are based on information from Electric Power Research Institute's Technical Assessment Guide and other information reported from Electric Power Research Institute.

Option 1.3.1.2

FIRST GENERATION PRESSURIZED FLUIDIZED BED COMBUSTION (1X340 MEGAWATTS)

The discussion of circulating atmospheric fluidized bed combustion (AFBC), option 1.1.1.4, describes the fluidized bed combustion (FBC) boiler. In a pressurized fluidized bed combustion (PFBC) unit, the FBC boiler is enclosed in a pressure vessel. The hot (about 1,600°F), pressurized flue gas exiting the cyclone is cleaned of particulates in a ceramic filter. The cleaned gas passes through an expansion turbine that drives an electric generator, as well as an air compressor that pressurizes the PFBC pressure vessel. Energy is recovered from the expansion turbine exhaust gas by boiler feedwater in an economizer before the gas is exhausted to the atmosphere. The PFBC plant consists of four PFB boiler/gas turbine modules powering one steam turbine (ST).

Steam is generated, superheated, and reheated in the PFBC boiler to drive a conventional steam turbine-generator. About 80 percent of the net power output is from the steam turbine, and about 20 percent is from the gas expansion turbine.

The PFBC boiler has a greater energy input per unit of boiler footprint area than either the AFBC or pulverized coal (PC) boilers. Therefore, the PFBC boiler requires less area for installation. The combined cycle feature of the unit (a steam turbine and a gas expansion turbine) provides for greater efficiency than either the AFBC or PC unit.

Sulfur capture in the PFBC boiler would allow a range of fuels to be burned. High sulfur coal would be the design fuel.

PFBC technology is considered to be at the large-scale demonstration stage of development.

Cost and performance data are based on reported information from Electric Power Research Institute.

Option 1.3.1.3

INTEGRATED GASIFICATION COMPRESSED AIR STORAGE WITH HUMIDIFICATION (1X410 MEGAWATTS)

The integrated gasification compressed air storage with humidification (IGCASH) cycle combines important features from compressed air energy storage, the humid air turbine concept, and coal gasification to form a new power cycle with low capital costs and improved operating flexibility compared to other coal-fired power plants.

In an IGCASH plant, the coal gasification system operates continuously to produce syngas, which is burned in a combustion turbine to generate power. The combustion turbine uses compressed air from an underground storage reservoir (e.g., a salt dome or aquifer), which is charged by a compressor train that operates only intermittently. The compressed air from the storage reservoir is humidified in a saturator so that the required air flow is significantly reduced. Reduced air flow from humidification lowers compressor energy requirements and the underground volume required for storage. Before entering the combustion turbine, the humidified air is heated in a recuperator utilizing the hot gas from the turbine exhaust.

During periods when the demand for electricity is low, the compressor train charges the air reservoir and consumes all the power output of the combustion turbine, making the net output of the plant zero. During high load periods, the compressor is shut off and the power output of the combustion turbine is transmitted to the electric grid.

IGCASH plants have the superior environmental emissions performance characteristics of all such integrated gasification plants. Sulfur dioxide (SO_2) and nitrogen oxides (NO_X) emissions are very low, while carbon dioxide (CO_2) emissions are relatively high because of the coal fuel and the heat rate, which is only average. Since the gasification plant runs 24 hours per day while the cycle is only intermediate duty, the gasification plant size is reduced and the plant capital cost is

therefore reduced. This plant should have excellent cycling characteristics since the hot components and gasification plant maintain steady operation.

One disadvantage of this cycle is the heat rate, which is not outstanding. Also, total daily generation is limited by the air stored in the underground reservoir and the amount of air injected into the reservoir by the compressor train.

Most, but not all, of the components needed for this cycle have been used in existing commercial power plants. The major exceptions are the saturator, which operates at high pressure (low pressure saturators are common in the chemical industry), and combustion with very humid air. An IGCASH plant has not yet been demonstrated, and there are no plans at this time for such a demonstration.

The cost and performance data are from Electric Power Research Institute's Technical Assessment Guide. Some performance data are inferred from other cycles.

Option 1.3.1.4

INTEGRATED GASIFICATION COMBINED CYCLE WITH FERTILIZER COPRODUCTION (3X227 MEGAWATTS)

The integrated gasification combined cycle with fertilizer coproduction (IGCC/F) option is similar to the IGCC described in option 1.3.1.5, except that a portion of the syngas is converted into chemical coproducts. A variety of coproducts can be produced from the oxygen-blown gasifier syngas. Sale of the coproduct(s) effectively reduces the cost of electricity from the IGCC/F plant. This option is based on fertilizer production.

The same gasifier capacity was considered for the IGCC option. Since a portion of the syngas is used for coproduct production and is not available for power generation, the electrical capacity of each of the 3 IGCC/F units is reduced to 227 megawatts. Similarly, the efficiency, on a kilowatt-hour basis is less than that for an IGCC plant without coproduction.

Cost and performance data are based on engineering studies performed by TVA and external architects and engineers.

Option 1.3.1.5

INTEGRATED GASIFICATION COMBINED CYCLE (3X245 MEGAWATTS)

Coal gasification is a method of producing relatively clean, burnable gas from almost any type of coal. The basic process involves crushing the coal and partially oxidizing the carbon in the coal. Partial oxidation converts the coal into a gaseous fuel composed primarily of combustible hydrogen and carbon monoxide. The gas can be piped directly into a gas turbine to generate electricity. The exhaust from the gas turbine is ducted into a heat recovery steam generator to produce steam for a conventional steam turbine generator.

The conversion of coal to gas requires more than just a gasifier to perform the gasification process. A coal gasification plant integrates a number of different technologies necessary to make gasification both environmentally safe and thermally efficient.

The integrated gasification combined cycle (IGCC) plant's major systems include fuel preparation, an air separation unit, a gasifier, acid gas removal, sulfur recovery, a combustion turbine-generator (CT), a heat recovery steam generator (HRSG), and a steam turbine-generator. Depending on the gasification technology, a wide variety of solid fuels can be used. This option is based on oxygen-blown gasifier technology with high sulfur coal as the fuel. The plant consists of 3 IGCC units, each generating 245 megawatts. *Figure T6-7* shows the major systems of the IGCC plant.

Coal is pulverized and injected into the pressurized gasifier unit. There, it is mixed with oxygen and partially oxidized at a high temperature to produce a hot, medium Btu gaseous fuel, syngas, that is composed primarily of combustible hydrogen and carbon monoxide. The oxygen is provided by the air separation unit. Coal ash is melted in the gasifier to form a slag that runs down the internal walls of the gasifier into a water bath. The molten slag solidifies in the water into a hard, inert, glassy material. It is removed from the gasifier through a lock-hopper system. High pressure steam is generated in the water-wall enclosure of the gasifier.

The syngas flows from the gasifier to a cooler. Medium pressure steam is generated in the syngas cooler. Particulate is removed from the cooled syngas by ceramic filters. Collected fly ash is recycled back to the gasifier.

A series of processes remove and/or convert chlorides, ammonia, and various acid gases from the syngas. Sulfur compounds are converted to marketable elemental sulfur. Sulfur recovery exceeds 99 percent.

The clean syngas is combusted with air in the CT to produce electricity. Excess nitrogen from the air separation unit is fed to the CT for power augmentation and to reduce nitrogen oxides (NO_X) emissions. The CT exhausts into the HRSG, where steam is generated to power a steam turbine-generator. The steam generated in the gasification unit and syngas cleanup processes is superheated in the HRSG and fed into the steam turbine. About two-thirds of the plant's net generation is from the CT, and one-third is from the steam turbine. Steam turbine exhaust is condensed and pumped back into the HRSG and gasification unit as feedwater. Heat is rejected from the condenser cooling water to the atmosphere in a mechanical draft cooling tower.

The combined cycle features of the IGCC plant provide a higher efficiency than either a simple cycle CT plant or a

FIGURE T6-7. **Generalized Block Flow Diagram of Coal Gasification of Production of Fuel Gas**

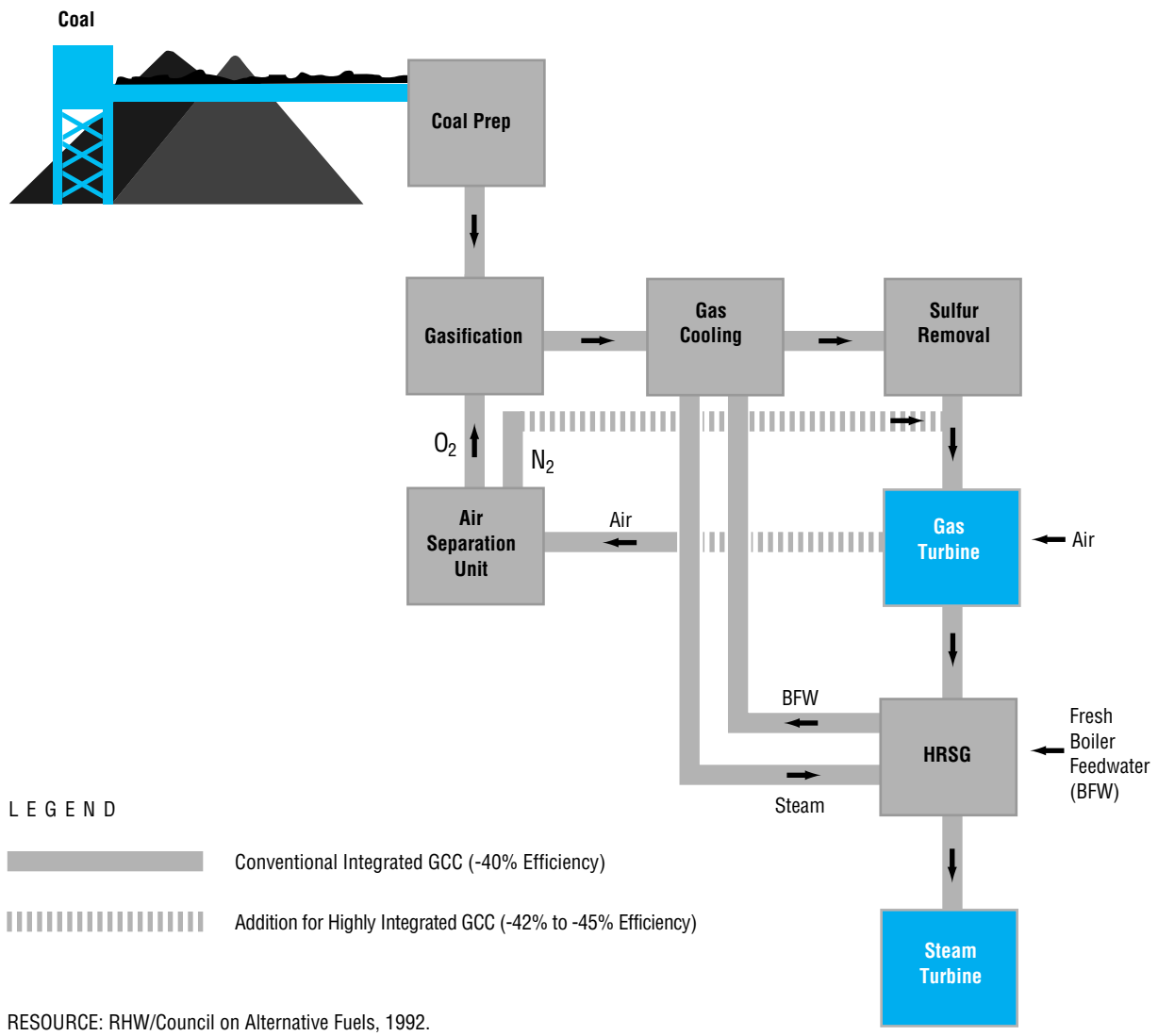

RESOURCE: RHW/Council on Alternative Fuels, 1992.

pulverized coal-fired plant. Higher auxiliary power consumption, primarily by the air separation unit, reduces efficiency below a natural gas-fired combined cycle plant.

Sulfur dioxide emissions are quite low due to the high sulfur recovery from the syngas in the sulfur removal process. The low nitrogen content in the syngas limits NO_X emissions to very low levels, as well.

IGCC plants are currently considered at the initial stage of commercial development. The relatively high capital cost, high efficiency, low emissions, and low fuel cost of the IGCC make it a candidate for future base-load capacity additions.

Cost and performance data are based on engineering studies performed by TVA and external architects and engineers.

Option 1.3.1.6

COMPRESSED AIR STORAGE WITH HUMIDIFICATION WITH INTEGRATED GASIFICATION AND NATURAL GAS PEAKING (1X850 MEGAWATTS)

A compressed air storage with humidification with integrated gasification and natural gas (CASHING) plant is an integrated gasification compressed air storage with humidification (IGCASH) plant with additional natural gas-fired expander trains. The CASHING cycle combines important features from compressed

air energy storage, the humid air turbine concept, coal gasification, and simple cycle combustion turbines to form a new power cycle with low capital costs and improved operating flexibility compared to other coal-fired power plants.

In a CASHING plant, the coal gasification system operates continuously to produce syngas, which is burned in a combustion turbine to generate power. The combustion turbine uses compressed air from an underground storage reservoir (e.g., a salt dome or aquifer), which is charged by a compressor train that operates intermittently. The compressed air from the storage reservoir is humidified in a saturator so that the required air flow is significantly reduced. Reduced air flow from humidification lowers compressor energy and underground volume requirements. Before entering the combustion turbine, the humidified air is heated in a recuperator utilizing the hot gas from the turbine exhaust.

During periods when the demand for electricity is low, the compressor train charges the air reservoir and consumes all the power output of the combustion turbine, making the net output of the plant zero. During high load periods, the compressor is shut off and the power output of the combustion turbine goes to the electric grid. The CASHING cycle differs from the IGCASH cycle in that natural gas-fired expander trains are added. When loads are very high, these natural gas-fired expander trains can be used for additional power generation.

CASHING will have the superior environmental emissions performance of all integrated gasification plants. Sulfur dioxide (SO_2) and nitrogen oxides (NO_X) emissions from the gasification plant would be very low, while carbon dioxide (CO_2) emissions from the overall plant would be somewhat less than those from a pulverized coal plant because of the low CO_2 emissions of the natural gas fuel. However, some consideration may have to be given to NO_X emissions from the additional natural gas-fired expander trains.

The CASHING plant has a much lower capital cost than the IGCASH plant, and one that approaches that of a natural gas-fired combined cycle. Due to the majority of heat input being supplied by coal, it is much less sensitive to the price of natural gas. The plant capital cost is reduced because of two factors. The gasification plant is smaller, since it runs 24 hours per day, while the cycle is only intermediate duty. Also, the natural gas-fired expander trains can be added for a very low incremental cost.

A CASHING plant should have excellent cycling characteristics since most of the hot components and the gasification plant maintain steady operation.

Since the plant uses natural gas for a part of its heat input, it is at least somewhat sensitive to the price of natural gas. Also, total daily generation is limited by the air stored in the underground reservoir and by the amount of air injected into the reservoir by the compressor train.

Most of the components needed for this cycle are currently available. The major exceptions are a saturator, which humidifies the combustion turbine air at high pressure (low pressure saturators are common in the chemical industry), and combustion with very humid air. A CASHING plant has not yet been demonstrated, and there are no plans at this time for such a demonstration.

The cost and performance data are based on studies performed by Energy Storage and Power Consultants under contract to Electric Power Research Institute. Some performance data are inferred from other cycles.

Option 1.3.1.7

ADVANCED PRESSURIZED FLUIDIZED BED COMBUSTOR WITH DEVELOPMENT COST (1X300 MEGAWATTS)

Option 1.3.1.7 describes the pressurized fluidized bed (PFB) boiler and expansion turbine. The expansion turbine inlet temperature is limited to about 1,600°F by the operating temperature of the PFB boiler, thus limiting the cycle efficiency. The efficiency can be increased by raising the expansion turbine inlet temperature. In the advanced PFB option, a fuel gas produced from pyrolysis of coal is used to raise the turbine inlet temperature. The fuel gas from the pyrolysis is cleaned in a high temperature and pressure filtration system before being burned in the combustion turbine. Combustion of the fuel gas will raise the inlet temperature to 2,300°F. Char from the pyrolyzer is used to fuel the circulating PFB boiler in order to generate steam that powers the steam turbine.

This technology is considered to be at the pilot scale of development. Components needing further development include the pyrolyzer, the combustors for the gas turbine, the high temperature and pressure filters, and high temperature gas valves. These development costs have been captured by adding to the capital cost of this option the financial support that TVA has been asked to contribute to a project to demonstrate the advanced PFB technology.

Sulfur capture by limestone fed to the pyrolyzer and PFB boiler would allow a range of fuels to be used. High sulfur coal would be the design fuel.

Performance and cost data for this option are based on Electric Power Research Institute's Technical Assessment Guide and information provided by Air Products, Inc.

Option 1.3.1.8

ADVANCED PRESSURIZED FLUIDIZED BED COMBUSTOR WITH NO DEVELOPMENT COST (1X300 MEGAWATTS)

This option is identical to option 1.3.1.7 except that no development costs for unproved technology components have been added to the option's capital cost. The capital cost used for this option is the projected cost of a commercial 300-megawatt advanced pressurized fluidized bed (PFB) plant after all components have been successfully demonstrated.

Option 1.3.1.9

PARTNERED INTEGRATED GASIFICATION COMBINED CYCLE WITH COPRODUCTION, GREENFIELD SITE (1X530 MEGAWATTS)

This option is similar to option 1.3.1.5 except for the fact that:

- Approximately 70 percent of the synthesis gas produced is utilized for the production of chemicals. Only 30 percent of the synthesis gas is used for power production. The facility will generate approximately 480 megawatts and produce about 6,600 tons of chemicals per day.
- The facility consists of four 3,000 ton per day gasifiers, two combustion turbines with heat recovery steam generators (HRSGs), and one steam turbine, plus a chemical production plant.
- It is assumed that partners would be found to own and operate the gasification plants and the chemical production plant. TVA would own and operate the power block only.

The cost and performance data are extrapolated from information in the Black & Veatch/Bechtel Power Corporation study performed for option 7.1.1.5, the integrated gasification combined cycle with coproduction repowering of Bellefonte.

Option 1.3.1.10

INTEGRATED GASIFICATION COMBINED CYCLE WITH COPRODUCTION, GREENFIELD SITE (1X498 MEGAWATTS)

Option 1.3.1.11

INTEGRATED GASIFICATION CASCADED HUMIDIFIED ADVANCED TURBINE WITH COPRODUCTION, GREENFIELD SITE (1X598 MEGAWATTS)

The coproduction of methanol results in a lower cost of electricity than fertilizer due to the higher net capacity of each unit—250 megawatts for methanol coproduction compared to 227 megawatts for fertilizer coproduction (see option 1.3.1.4). The generic greenfield application for coproduction therefore uses methanol as the coproduct.

These two options—integrated gasification combined cycle (IGCC) and integrated gasification cascaded humidified advanced turbine (IGCHAT)—with coproduction are similar to the IGCC (option 1.3.1.5) and IGCHAT (options 1.3.2.5 and 1.3.2.8). However, for these two options, a portion of the synthesis gas is converted into chemicals through indirect liquefaction of the syngas. A variety of coproducts can be produced by indirect liquefaction, such as ammonia- and methanol-based chemicals, and transportation liquids. Only oxygen-blown gasification can produce chemicals; with air-blown gasification, the nitrogen (N_2) in the fuel gas reduces the hydrogen partial pressure.

The gasification coal feedrate of these two options is the same as both IGCC and IGCHAT. Although the combustion turbine is fully loaded, the reduced capacity is due to the use of steam in the chemical process.

The coproduction of electricity and chemicals reduces the cost of electricity due to (1) economies of scale for the gasification process units and the balance-of-plant units and (2) the anticipated real escalation of prices for natural gas-derived chemicals.

The revenues for the higher valued chemicals subsidize the cost of electricity.

Cost and performance data are based on engineering studies performed by TVA.

Option 1.3.1.12

COAL REFINERY/INTEGRATED GASIFICATION COMBINED CYCLE, GREENFIELD SITE (1X530 MEGAWATTS)

Option 1.3.1.13

COAL REFINERY/INTEGRATED GASIFICATION CASCADED HUMIDIFIED ADVANCED TURBINE, GREENFIELD SITE (1X530 MEGAWATTS)

Coal refining is another form of coproduction (see options 1.3.1.10 and 1.3.1.11). However, coal refining produces chemicals on the front end of coal gasification. Coal refining uses internally generated hydrogen (H_2) to produce coal liquids from the pyrolysis of coal. The resultant char is then used as the feedstock for integrated gasification combined cycle (IGCC) or integrated gasification cascaded humidified advanced turbine (IGCHAT) (see options 1.3.1.5, 1.3.2.5, and 1.3.2.8). The Charfuel coal refining process utilizes flash hydropyrolysis with quenching of the reaction products by H_2 and recycled liquids. Excess syngas—rich in methane (CH_4)—is converted to H_2 in a partial oxidation reactor (POX) to provide the quenching H_2. The char is separated from the syngas, and the syngas is cooled to condense liquids. The coal liquids are then hydrotreated and fractionated to produce benzene, naptha, and fuel oil.

Cost and performance data are based on engineering studies performed by TVA.

Option 1.3.1.14

COAL REFINERY/INTEGRATED GASIFICATION CASCADED HUMIDIFIED ADVANCED TURBINE WITH COPRODUCTION, GREENFIELD SITE (1X180 MEGAWATTS)

This option combines coal refining (see options 1.3.1.12 and 1.3.1.13) with option 1.3.1.11—integrated gasification cascaded humidified advanced turbine (IGCHAT) and coproduction of methanol—in a single plant. The plant consists of one coal refining unit, one char gasification unit, one cascaded humidified advanced turbine (CHAT) unit, and one methanol unit. The coal feed rate is equivalent to a two-train IGCHAT plant.

Option 1.3.2.1

FUEL CELL – MOLTEN CARBONATE OR SOLID OXIDE (1X2 MEGAWATTS)

Fuel cells are a unique advanced power generation technology because they directly convert chemical energy into electricity. All other fossil fuel-based power generation technologies require conversion of thermal energy by combustion, followed by turboexpansion or steam generation. As a result, fuel cells avoid the nitrogen oxides (NO_X) emissions and mechanical limitations of combustion and thermal conversion. This means fuel cells offer lower emissions and higher thermal efficiencies compared to any other fossil fuel-based power generation technologies.

Conceptually, fuel cells are similar to a battery with a continuous supply of chemical energy. In a fuel cell, hydrogen gas is oxidized at the anode, and the oxygen is reduced at the cathode. In this process, fuel and oxygen are supplied to cells, and the carbon dioxide and water byproducts of the reaction are removed. Since fuel cells convert the chemical energy in the fuel directly to electricity, without an intermediate thermal energy stage, theoretical energy conversion efficiencies approach 80 percent. However, practical systems are limited to efficiencies of 40-60 percent due to parasitic losses, which include the electrical resistance of the components. This potential for very high energy efficiencies, combined with relatively minor environmental impacts, makes fuel cells prime candidates for future use in electric power generating systems that must operate under the constraints of high fuel costs and minimal emissions.

Fuel cells can be assembled in building block style to make power plants of specifications tailored to the utility's load growth needs and the constraints of the site. Individual fuel cells produce less than one volt but operate at very high current densities—on the order of hundreds of amperes per square foot of electrode area. Practical output voltages are obtained by connecting many cells in series to constitute a fuel cell stack. Stacks have generating capacities ranging from a few kilowatts to several megawatts. The maximum size of a stack is dictated by engineering constraints, manufacturing technology, and cost trade-offs.

Fuel cell power plants consist of three major subsystems unique to this technology and a general balance-of-plant subsystem. The fuel processing system converts natural gas or distillate fuels to a fuel gas rich in hydrogen and carbon dioxide. Catalytic reforming processes with this capability have been in commercial use for many generations. Alternatively, a coal gasification plant can be substituted to produce the same fuel gas from coal. The fuel cell stack subsystem generates direct current power from the fuel gas while simultaneously emitting a benign exhaust gas. If desired, the system may be designed so that the exhaust gas contains economically significant quantities of thermal energy. The power conditioning subsystem converts the direct current output of the fuel cell stack to alternating current power. If a fuel cell is used for a decentralized application in small sizes, and if the customer needs direct current power, the power conditioning equipment can be removed. The balance-of-plant subsystem—including the plant control systems—provides the water and heat management, and heat recovery if desired. This subsystem also includes physical facilities such as buildings and other site-related items.

Fuel cells operate at a constant temperature and pressure regardless of load. As a result, the thermal energy liberated by the electrochemical reaction can be used in thermal bottoming cycles or for cogeneration of steam. The temperature of the waste heat varies widely with each fuel cell type, system, and design. Generally, the more advanced fuel cell systems provide the highest potential for high-quality waste heat because they operate at higher temperatures.

The commercialization of fuel cells is now targeted at factory-assembled modules. Generating capacities range from 200 kilowatts for single-stack, small-load applications to 10-25 megawatts for generating units. The primary features of these commercial concepts are:

- Modular construction, which combines the economies of mass production in a factory environment with the associated benefits of improved quality control.
- Phased construction of generating units in order to match capacity to load growth with minimal preinvestment.
- Fuel flexibility between natural gas and distillate, which may allow continued use of these fuels despite major price increases in the future.

FIGURE T6-8. **Molten Carbonate Fuel Cell Generating Unit**

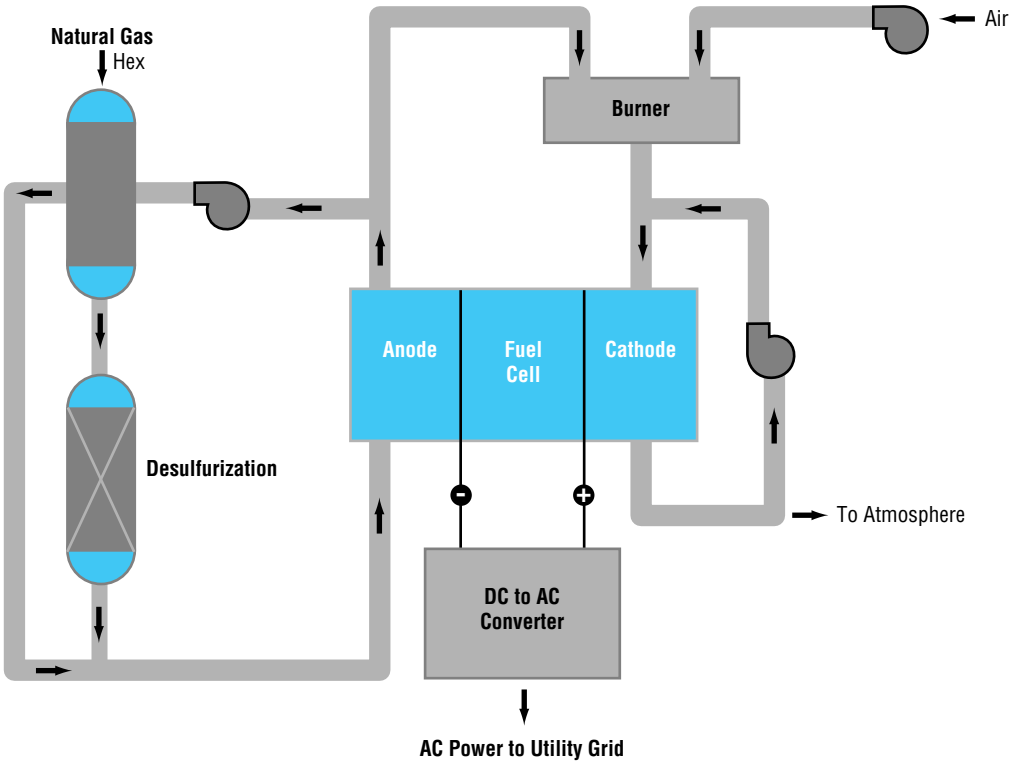

- Integration with coal gasification to provide very high efficiency conversion of coal to electric power with minimal emission potential.
- Excellent capability for distributed generation applications due to quiet operation, minimal emissions, low heat rate, small operating staff, and rapid load-following capability.

The cost and performance data are based on fuel cell vendor estimates.

Molten Carbonate Fuel Cells. Molten carbonate fuel cells (MCFC) are a second-generation technology, emerging from laboratory research to engineering development at pilot-plant scale. *Figure T6-8* shows a diagram of a molten carbonate fuel cell generating unit. MCFCs operate at approximately 1,200°F. At this temperature, waste heat from MCFCs can provide the heat of reaction needed to convert light hydrocarbon fuels to synthesis gas, which can be consumed by the fuel cell. As a result, the fuel-processing system can be incorporated within the fuel cell stack. Advantages of this configuration include:

- High plant efficiency: greater than 50 percent higher heating value (HHV) with the possibility of achieving 60 percent (5,600 Btu per kilowatt-hour) on natural gas, alcohols, and light hydrocarbon fuels in small-capacity plants
- Very low emissions: 1 pound per megawatt-day combined nitrogen oxides (NO_X), sulfur oxides (SO_X), hydrocarbons, and particulates
- Low noise
- Air-cooled systems, which minimize siting problems
- A compact system, i.e., 25 megawatts per acre per vertical story

Within the next five years, the MCFC total installed capital cost is likely to be less than $1,000 per kilowatt.

Solid Oxide Fuel Cells. Westinghouse has been developing solid oxide fuel cells (SOFC) for more than 20 years, and they are the world's leader in this technology. Experimental units of 25 kilowatts have been constructed by Westinghouse for evaluation by electric and gas utilities. Westinghouse plans to commercialize a series of SOFC power plants with capacities ranging from hundreds of kilowatts to several megawatts.

The cost and performance data for this technology are under development, but the range seems to be between $750 per kilowatt and $1,000 per kilowatt.

Option 1.3.2.2

INTERCOOLED AERODERIVATIVE COMBUSTION TURBINE (1X125 MEGAWATTS)

The intercooled aeroderivative combustion turbine (ICAD) is one of the advanced combustion turbine cycles being studied in Electric Power Research Institute's Collaborative Advanced Gas Turbine program. Aeroderivative combustion turbines are now available and have excellent efficiencies because of their high pressure ratios.

However, a high pressure ratio causes excessive compressor power consumption. Compressor intercooling would decrease compressor power use, thereby increasing plant efficiency and power output. The ICAD would match intercooling with aeroderivative technology.

The ICAD cycle would be very similar to the simple cycle combustion turbine, option 1.1.2.1, except that an intercooler would be added to cool the compressed air at some point in the compression process to reduce compressor power consumption. The primary fuel would be natural gas with fuel oil as a backup. The performance for this concept is based on a nominal 2,600°F turbine inlet temperature which, because of cooler compressor air being available for turbine blade cooling, will not be technologically difficult to achieve.

The emissions characteristics of the ICAD would be similar to that of a simple cycle combustion turbine. Sulfur dioxide (SO_2) emissions would be negligible and carbon dioxide (CO_2) emissions would be roughly half of a typical pulverized coal plant. Nitrogen oxides (NO_X) emissions would also be low since dry, low NO_X combustors would be used. A selective catalytic reduction (SCR) could further lower NO_X emissions, but it is not included in this configuration.

The major potential advantages of the ICAD are its high simple-cycle efficiency for a cost which should not be much greater than that of current simple-cycle combustion turbines, and its operational flexibility. It can be used for intermediate duty, because of its high efficiency, or for peaking duty, because it appears especially promising for high-cycling use.

However, because of a lower exhaust temperature, the ICAD does not provide commensurate improvement in combined cycle efficiency. Also, because of the complexities of incorporating intercooling into the cycle, development costs are expected to be moderate.

The ICAD is one of the concepts being developed under Electric Power Research Institute's Collaborative Advanced Gas Turbine program. Electric Power Research Institute's goal is to design, build, sell, and test two ICAD units by approximately 1998.

The cost and performance data are based on information from Electric Power Research Institute's Advanced Cycle Evaluation (ACE) Group.

Option 1.3.2.3

CASCADED HUMIDIFIED ADVANCED TURBINE (F SERIES CT) (1X288 MEGAWATTS)

Option 1.3.2.6

CASCADED HUMIDIFIED ADVANCED TURBINE (G SERIES CT) (1X400 MEGAWATTS)

The cascaded humidified advanced turbine (CHAT) is an advanced Ericson cycle that employs intercooling, recuperation, reheating, and humidification of a combustion turbine with a cascaded topping turbine. Heat rates are equivalent to combined cycle plants, and capital costs are projected to be 20 to 30 percent less because the heat recovery steam generator, steam turbine, condenser, etc. are avoided. The exact arrangement of equipment and operating conditions are proprietary, but nearly all components are already available and proven, with only the high pressure combustors, saturator, and the overall integration and control of components requiring development.

The cascaded humidified advanced turbine (CHAT) adds humidification to the cascaded advanced turbine (CAT) cycle downstream of the last compressor stage. Performance improves because the water vapor expands through the turbine and reduces the amount of air which would otherwise have to be supplied by the compressor. Nitrogen oxides (NO_X) levels are thus reduced to near deminimus levels of about 1 to 2 parts per million.

The cost and performance data are based on studies performed by Energy Storage and Power Consultants under contract to Electric Power Research Institute.

Option 1.3.2.4

INTEGRATED GASIFICATION CASCADED HUMIDIFIED ADVANCED TURBINE WITH COPRODUCTION (F SERIES CT) (2X303 MEGAWATTS)

Option 1.3.2.7

INTEGRATED GASIFICATION CASCADED HUMIDIFIED ADVANCED TURBINE WITH COPRODUCTION (G SERIES CT) (2X420 MEGAWATTS)

This technology is the same as the integrated gasification cascaded humidified advanced turbine (IGCHAT) (options 1.3.2.5 and 1.3.2.8) except that the gasifier is oversized to allow for the coproduction of both electricity and chemicals such as fertilizer (urea), methanol, methyl tertiary butyl ether (MTBE), etc. Process steam requirements are produced from oversized intercoolers.

The cost and performance data are based on studies performed by Energy Storage and Power Consultants under contract to Electric Power Research Institute. TVA studies provide the basis for the information on coproduction.

Option 1.3.2.5

INTEGRATED GASIFICATION CASCADED HUMIDIFIED ADVANCED TURBINE (F SERIES CT) (2X303 MEGAWATTS)

Option 1.3.2.8

INTEGRATED GASIFICATION CASCADED HUMIDIFIED ADVANCED TURBINE (G SERIES CT) (2X420 MEGAWATTS)

The integrated gasification cascaded humidified advanced turbine (IGCHAT) integrates a coal gasification plant with the cascaded humidified advanced turbine (CHAT) cycle. The turbine is fired with clean syngas, and emissions of sulfur oxides (SO_X), nitrogen oxides (NO_X), and toxics normally associated with coal plants are extraordinarily low. Because the syngas can be humidified, a low-cost, total quench gasifier can be used, resulting in capital and operating costs that are 25 to 35 percent of those for a conventional integrated gasification combined cycle (IGCC), option 1.3.1.5.

The cost and performance data are based on studies performed by Energy Storage and Power Consultants under contract to Electric Power Research Institute.

Option 1.3.2.9

INTEGRATED FUEL CELL/COMBUSTION TURBINE (1X2.5 MEGAWATTS)

This option integrates a solid oxide fuel cell (as described in option 1.3.2.1) with a small combustion turbine. The fuel cell exhaust gas is at about 1,800°F and is pressurized. In this integrated concept, the exhaust gas is fed into a small combustion turbine to produce additional electricity (beyond the fuel cell output). The fuel cell's efficiency is already high, and integration of the combustion turbine can raise the overall efficiency to about 70 percent.

This concept is still under development. Current studies seek to determine the best overall design, taking into account several variables, such as the number of fuel cells used with a single turbine, identification of the most appropriate design and size of turbine, and variations in fuel cell operating conditions.

The overall characteristics of this option, including likely applications, are very much like the fuel cell (option 1.3.2.1). However, the combustion turbine increases overall efficiency while adding some complexity to the equipment.

The cost and performance data are based on preliminary fuel cell vendor estimates.

Option 1.3.3.1

LARGE SOLAR-PHOTOVOLTAIC – FIXED FLAT PLATE (1X50 MEGAWATTS)

Solar-photovoltaic (PV) power plants convert solar energy to electricity using a semiconductor material, usually silicon doped with phosphorus and boron, to generate a direct current. In order to increase the conversion efficiency, the principal PV technologies are thin-film, polycrystalline silicon, single-crystal silicon, and concentrator technology. Thin-film materials are typically deposited on a glass substrate and include amorphous silicon, copper-indium-diselenide (CIS), and cadmium telluride.

Except for a thin-film module, a typical solar cell produces about 2 amperes of current at 0.5 volts. Individual cells are combined together into modules and connected in series and parallel to provide higher voltage and current levels. The active areas of the modules are typically from 0.1 to 2 square meters, and the modules are typically connected together in flat arrays. Three array configurations are used: (1) fixed-tilt arrays facing south, (2) single-axis tracking of the sun from east to west, and (3) two-axis tracking of the sun to remain perpendicular to the sun's rays. The direct current power generated by the arrays is collected and converted to alternating current power by a power conditioning unit.

On a typical day, the insolation falling on a surface oriented perpendicularly to the sun's rays reaches a maximum of about 1 kilowatt per square meter at solar noon, and is lower in the morning and afternoon. Because the best commercial solar cells operate at about 12 percent conversion efficiency, the maximum power available is 120 watts per square meter. Thus, a 100-megawatt power plant would require about one square mile of land area. Since PV power output is proportional to the incident solar insolation, it is not dispatchable without energy storage.

The cost and performance data are based on information from Electric Power Research Institute's Technical Assessment Guide.

Option 1.3.3.2

LANDFILL METHANE (1X2 MEGAWATTS)

The reasons for recovering landfill gas are numerous. Communities can receive revenue from a successful landfill gas project. Recovering methane helps reduce the odors produced from decomposing garbage, which can be disturbing to individuals living in the vicinity of the landfill. Also, landfill gas recovery

FIGURE T6-9. **Landfill Gas to Electricity**

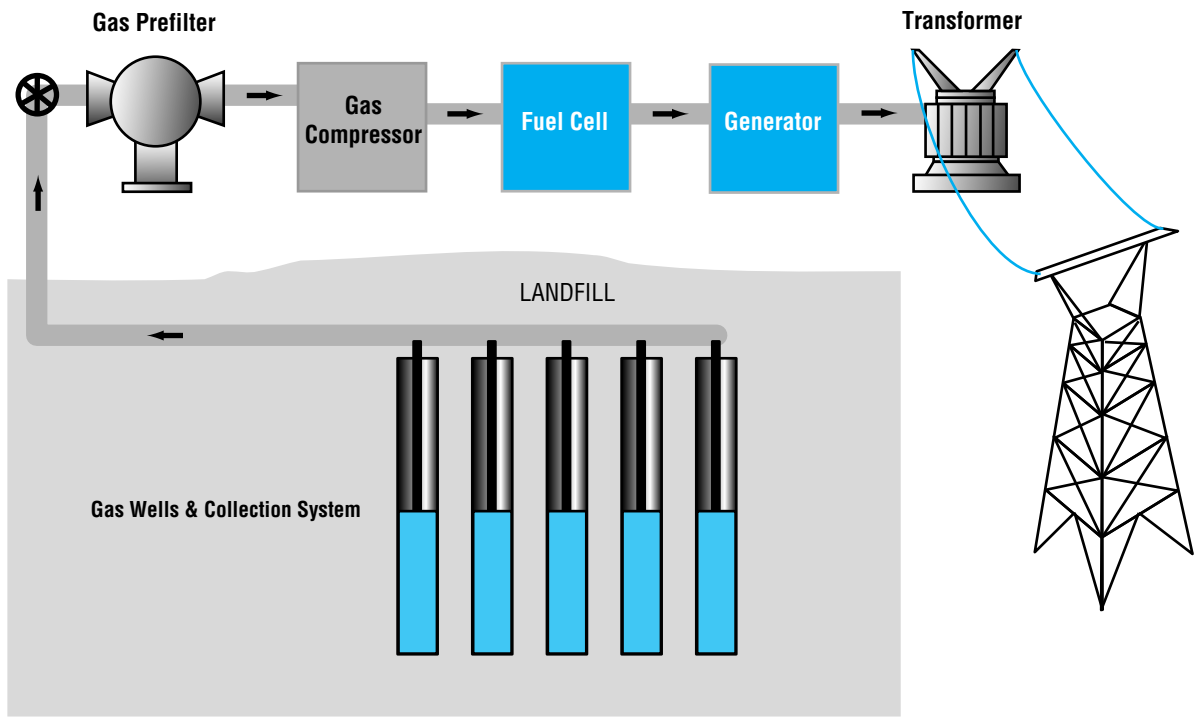

reduces greenhouse gas emissions, which are potentially harmful to the environment.

As a fuel, landfill gas has a reasonably high heating value in raw form and can be upgraded to pipeline quality if desired. The landfill gas can be flared or used as a fuel on-site to produce electricity in a small combustion turbine, reciprocating engine, boiler, or eventually fuel cells. Cost and performance projections are based on use of fuel cells. Collecting landfill gas can be expensive because it is spread out over a wide area. It is difficult to predict the amount available and also to anticipate fluctuations in supply. Such information is critical to determine the economics of a landfill gas recovery project. Additional expenses are incurred in treating the gas to remove moisture, trace hydrocarbons, carbon dioxide, and especially hydrogen sulfide. A small number of landfill gas production facilities currently exist in the United States. *Figure T6-9* shows a diagram of the process for converting landfill gas to electricity.

The cost and performance data are based on vendor estimates.

Option 1.3.3.3

COALBED METHANE (1X2 MEGAWATTS)

Coalbed methane gas is present in all coal seams located throughout the United States, including the TVA region. The coalbed methane industry has grown during the recent years, powered greatly by new science and better technology. Still, major challenges remain that require research particularly in developing new basins, deeper coals, and geologically complex settings.

Numerous problem areas must be overcome before coalbed methane is accepted as a viable fuel. Estimating coalbed gas productivity and reserves remains a major problem for producers of coalbed methane. Also, the industry has yet to satisfy the financial community that it can reliably determine how much of the gas can be recovered and over what period of time. Most coal companies will find that it is not economically feasible to collect coalbed methane without a federal subsidy or tax credit. Cost and performance projections are based on use of fuel cells. At the present time, these incentive programs are not available to owners of coal mines.

A number of environmental issues, each requiring technologically innovative solutions, are of high concern to devel-

opers of coalbed methane. The most urgent are the disposal or use of coproduced water and the pending regulations on air emissions for gas compression engines. Also, the disturbance of land areas required for well sites, service roads, and gas collection systems are major concerns.

Another major obstacle to coalbed methane development is the legal question of gas ownership. This is a very complex issue and is not easily resolved. Each ownership case is usually decided on a site-specific basis, and legal rulings may vary between sites.

The cost and performance data are based on information from Electric Power Research Institute's Technical Assessment Guide.

OPTION 1.3.3.4

BIOREFINERY—COPRODUCTION OF ELECTRICITY AND CHEMICALS FROM BIOMASS (1X100 MEGAWATTS)

The biorefinery coproduces electricity and chemicals. The biomass feedstock consists of mill and wood waste, farm wastes, or dedicated crops (trees and grasses). Municipal solid waste also contains biomass material. All biomass is composed of cellulose, hemicellulose, and lignin. The cellulose and hemicellulose are converted to sugars by acid or enzymatic hydrolysis, and the sugars are fermented to chemicals (such as ethanol, organic acids, and furfural). The residual lignin is converted to electricity by either combustion or gasification. The production of higher valued chemicals significantly reduces the cost of electricity from biomass, in a dedicated biomass plant.

The biorefinery has low sulfur dioxide emissions and solid waste due to the composition of the biomass, and has a zero net production of carbon dioxide.

The cost and performance data are based on TVA internal reports on the biorefinery concept. TVA has been operating laboratory-scale units and a 2 to 10 tons per day pilot unit at the Environmental Research Center in Muscle Shoals, Alabama, for the last 10 years.

Option 1.3.5.1

ADVANCED BATTERY ENERGY STORAGE (1X20 MEGAWATTS)

The advanced energy storage battery is based on a 20-megawatt unit designed for 3-hour and 5-hour storage applications. These two duty cycles are given because for batteries, the cost for the energy component is not a linear function of duty cycle. Incremental off-peak electric energy is used to charge an advanced battery based on either the sodium-sulfur or the zinc-bromine system. The battery plant is composed of modular units. Battery capital costs are based on a production of 2,000 megawatts per year. The environmental emissions of the advanced battery plants are virtually zero. Battery plants have an extremely fast time response capability—full load can be achieved in less than 5 milliseconds.

The cost and performance data are based on information from Electric Power Research Institute's Technical Assessment Guide.

Option 1.3.5.2

SUPERCONDUCTING MAGNETIC ENERGY STORAGE (1X500 MEGAWATTS)

Superconducting magnetic energy storage (SMES) technology is applicable to all utility regions in the United States. Low-cost, off-peak energy is stored as direct current in a superconducting coil whose conductor is made of a low temperature niobium titanium alloy. Refrigeration is needed to maintain the low coil core temperature. The refrigeration costs are accounted for in the fixed costs for operating the plant, and as such, affect the plant capital cost and life-cycle cost for purchasing and operating the plant.

Since the stored energy is in the form of electricity which is not converted to some other form of energy, the round-trip efficiency of a superconducting magnetic energy storage (SMES) plant is very high, about 95 percent. The plant power conditioning system is the component that controls the plant and converts the stored direct current energy to the required utility grid alternating current requirements (which can accommodate reactive power control, black-start, and/or system frequency control, just to name a few of the possible plant applications). *Figure T6-10* shows a diagram of a superconducting magnetic energy storage plant.

SMES plants would have a very rapid response time of less than one-tenth of a second to reach full load. As such, a major benefit of this technology is the range of dynamic, strategic, and load-leveling benefits that this plant can provide to its owner. The plant would have a 500-megawatt capacity and a two-hour storage discharge time.

There would be no emissions associated with the SMES plant other than the emissions from the generation sources used to charge the coil.

SMES technology is not yet commercially available for energy storage applications of this type but is considered a future option.

The cost and performance data are based on information from Electric Power Research Institute's Technical Assessment Guide.

FIGURE T6-10. **Superconducting Magnetic Energy Storage**

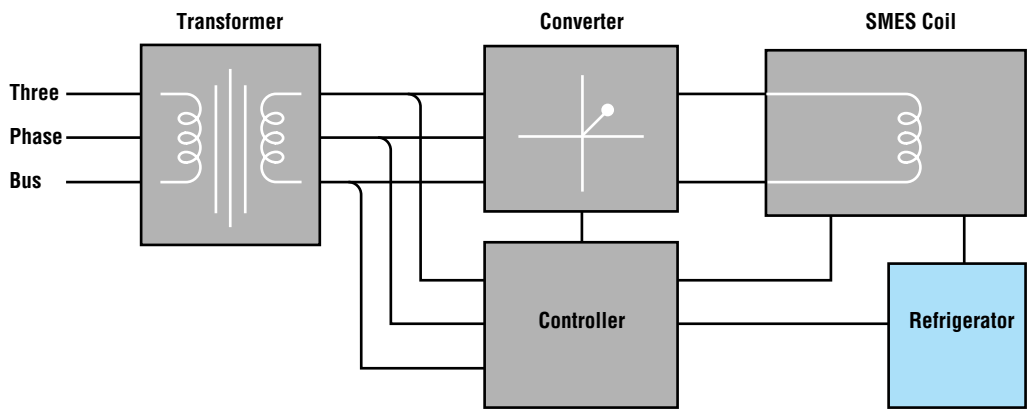

Option 2.1.3.1

ADDITIONAL HYDRO GENERATION AT EXISTING NONPOWER PROJECTS (1X10 MEGAWATTS)

Option 2.1.3.2

ADDITIONAL HYDRO GENERATION AT EXISTING PROJECTS (1X24 MEGAWATTS)

Option 2.1.3.3

ADDITIONAL HYDRO GENERATION – NEW CONVENTIONAL PROJECTS (1X65 MEGAWATTS)

This category includes three types of additional hydro generation:

1. Additional units at existing hydro power projects
2. Additional units at existing nonpower hydro projects
3. New conventional projects

These options would be similar to current TVA hydro generation facilities. A dam creates an upper and a lower water reservoir. The potential energy stored in the water in the higher reservoir is converted to electricity as it flows through a hydro turbine to the lower reservoir.

Like other hydro generation, these options would have several advantages over other generating technologies:

- Very low operating costs
- Zero emissions
- Excellent operational flexibility (e.g., low startup and shutdown costs and rapid ramp rates)

However, there are some disadvantages in these hydro options:

- Very high capital cost
- Limited energy
- Limited amount of generation
- Environmental impacts on the river
- In the case of new conventional projects, environmental impacts on the local area

This power generation technology is commercially mature. Water Resources Projects in Knoxville, Tennessee, provided the cost and generation data from studies done many years ago. The three options listed above refer to studies conducted in the years 1983, 1977, and 1965, respectively.

Option 2.1.3.4

HYDRO MODERNIZATION AT EXISTING PROJECTS

TVA's hydro system was installed in the 1940s and 1950s. Since that time, technology has advanced significantly on several fronts of hydro plant design. A modernization project is currently underway to take advantage of advances that have produced the largest benefit to the TVA hydro system, but there are still several remaining upgrades that could be performed. These remaining projects could increase the summer capability of the hydro system by over 160 megawatts.

The cost and performance information for modernization projects at existing hydro sites was provided by the TVA organization responsible for fossil and hydro projects.

Option 3.3.1.1

GENERIC PRESSURIZED FLUIDIZED BED COMBUSTION COGENERATION (1X70 MEGAWATTS)

Option 12.1.2.1

GENERIC COMBINED CYCLE COGENERATION (2X210 MEGAWATTS)

Cogeneration is defined as the sequential production of electricity and useful thermal energy (generally steam or hot water) from a single fuel source. Cogeneration utilizes the thermal energy normally discharged as waste heat in a conventional power generation process. It thus provides a higher overall efficiency (often more than double that of the conventional generation system) in fuel utilization, but often at the expense of lower electric output.

A number of different cogeneration technologies are available, including some of those already considered under the fossil and hydro options. With steam turbine technology (for example, using pulverized coal or the fluidized bed technology discussed before) steam is expanded in the turbine to the condensing pressure for pumping back to the boiler as feedwater. With an extraction turbine, steam is removed from the turbine at one or more intermediate points and used for process requirements, with the remaining steam expanded in the turbine to condensing pressure to generate power. In a backpressure turbine, the steam is expanded in the turbine to the pressure required for the process.

In gas turbine systems, the exhaust gases from the turbine are used to generate steam in a heat recovery steam generator. The steam generator may also have supplementary firing in order to increase the quantity of thermal energy without degrading the electric output.

Combined cycle systems consist of a gas turbine and steam turbine in combination. The gas turbine exhaust is used to generate steam for process heating and to generate electricity in a steam turbine. Process steam can also be extracted from the steam turbine.

Cost and performance data are based on cogeneration technology proposals presented to TVA.

Option 4.1.1.1

LIGNITE-FIRED CIRCULATING FLUIDIZED BED COMBUSTION PLANT (1X200 MEGAWATTS)

The lignite-fired circulating fluidized bed combustion (CFBC) plant is essentially the same plant as the circulating atmospheric fluidized bed combustion plant, option 1.1.1.4, described earlier, except for the fact that the fuel is lignite rather than Illinois Basin coal.

The cost and performance information for this plant were obtained primarily from Electric Power Research Institute's Technical Assessment Guide with additional information provided by various industry sources.

Option 5.1.1.1

NON-UTILITY GENERATION – GENERIC INDEPENDENT POWER PRODUCER LIGNITE CIRCULATING FLUIDIZED BED COMBUSTION PLANT (1X300 MEGAWATTS)

Option 13.1.2.1

NON-UTILITY GENERATION – GENERIC INDEPENDENT POWER PRODUCER COMBINED CYCLE (2X260 MEGAWATTS)

Option 13.1.2.2

NON-UTILITY GENERATION – GENERIC NATURAL GAS INDEPENDENT POWER PRODUCER COMBINED CYCLE (1X150 MEGAWATTS)

Option 19.3.1.1

NON-UTILITY GENERATION – GENERIC INTEGRATED GASIFICATION COMBINED CYCLE (1X110 MEGAWATTS)

Option 22.1.1.1

NON-UTILITY GENERATION – GENERIC INDEPENDENT POWER PRODUCER PULVERIZED COAL WITH COGENERATION (2X170 MEGAWATTS)

Option 23.1.3.1

NON-UTILITY GENERATION – GENERIC INDEPENDENT POWER PRODUCER RUN OF RIVER HYDRO (4X20 MEGAWATTS)

Option 29.1.5.1

NON-UTILITY GENERATION – GENERIC INDEPENDENT POWER PRODUCER PUMPED-HYDRO STORAGE

Non-utility generation (NUG) is a broad term used to designate power producing facilities that are not majority-owned by utilities.

NUG can be classified as a qualifying facility (QF) if it meets certain criteria defined in the Public Utilities Regulatory Policies Act of 1978 (PURPA) and subsequent implementation rules established by the Federal Energy Regulatory Commission (FERC). QFs are exempt from most federal and state utility regulations. Utilities are required to purchase power from a QF at less than or equal to its avoided cost and must provide standby (backup) power on a nondiscriminatory basis.

Non-QFs are the NUG facilities that do not satisfy these FERC criteria. The non-QFs that sell electricity are designated as independent power producers (IPPs). An IPP that is either partially or wholly owned by a traditional utility is defined as an affiliated power producer (APP).

The Energy Policy Act of 1992 created a new class of independent power producers called exempt wholesale generators (EWG). EWGs are exempt from the Public Utilities Holding Company Act (PUHCA) and sell electric energy at wholesale rates, either directly or through an affiliate. This allows utilities to own one or more EWGs or foreign utilities without PUHCA jurisdiction and provides expanded access to utility-owned transmission systems.

The Public Utilities Regulatory Policies Act of 1978 (PURPA) was enacted as a part of the National Energy Act of 1978 to encourage the conservation and efficient use of energy resources by electric utilities. PURPA encourages production of electric power by cogeneration and by small power producers. TVA was given regulatory responsibility for implementing PURPA in the area served with TVA power.

Cost and performance data are based on non-utility generation proposals presented to TVA.

Option 6.3.2.7

GAS TURBINE – MODULAR HELIUM REACTOR (3X289 MEGAWATTS)

This option, often called the modular helium reactor or MHR, is derived from several years of work to develop a high temperature gas-cooled reactor. Although the concept benefits greatly from prior development work, several more years of development and design work are needed before the characteristics and availability of the option can be guaranteed.

The MHR option has several distinctive characteristics. First, it extracts heat from a graphite nuclear core using helium as the coolant and working fluid. (The other nuclear options included in Energy Vision 2020 use water to remove heat from a metal-clad core.) Second, the thermal energy is converted to power by expanding helium through a closed-cycle gas turbine with intercooling, recuperation, and precooling. (Most other options in Energy Vision 2020 convert thermal energy to power by expanding steam through a closed-cycle turbine or expanding combustion gases through an open-cycle turbine.) Third, a plant would consist of at least three small modular units. The small unit size allows use of passive safety features to achieve nuclear safety. Fourth, the reactor and helium operate at high temperatures to achieve higher efficiency than conventional nuclear units (approximately 48 percent compared to 32 percent). Compared with conventional nuclear plants, the higher thermal efficiency, modular design, elimination of the steam cycle, and simpler safety systems of this option are expected to offset the lack of economy of scale associated with it.

Option 6.3.4.1

ADVANCED LIGHT WATER REACTOR (1X1300 MEGAWATTS)

U.S. and foreign utilities, reactor designers, and the U.S. Department of Energy have been developing new nuclear reactor power plant designs over the past several years for possible near-term and mid-term deployment in the United States and overseas. These reactor designs are collectively identified as advanced light water reactors (ALWR).

There are four advanced light water reactor plants under various stages of development and licensing in the U.S. The four plants include two technologies (the evolutionary designs) with a nominal power rating of approximately 1,300 megawatts, and two technologies (the passive designs) with a nominal power rating of 600 megawatts. While either the evolutionary or passive designs may ultimately emerge as a preferred design for the next generation of nuclear power plants in the United States due to performance and economic performance, both offer significantly enhanced safety performance. At the present time, the evolutionary reactors have achieved a more advanced developmental status than the passive reactors both in terms of design detail and Nuclear Regulatory Commission review. Consequently, the advanced light water reactor option considered in Energy Vision 2020 is primarily based on the evolutionary design, but this is not intended to preclude consideration of a passive design, as well.

The two evolutionary designs (advanced boiling water reactor (ABWR) and System 80+) are extensions of current technology and experience that employ advanced design features compared to existing nuclear power plants. For example, the System 80+ utilizes a large spherical containment with a wraparound auxiliary building. The ABWR eliminates recirculation piping by using wet motor glandless pumps located in the reactor vessel bottom head.

The evolutionary ALWR designs are expected to be commercially available by the year 2000. These designs are being guided by Volumes I (Top Tier Requirements) and II (Evolutionary Plant) of the Utility Requirements Document (URD), which have been developed jointly by domestic and foreign industry and the U.S. government. The Final Safety Evaluation Report has been issued for Volume II. Volume I does not require a Safety Evaluation Report.

Both of the evolutionary reactor designs have recently been granted final design approval (FDA) by NRC under 10CFR Part 52. Each design must now undergo a final evaluation that is

open to the public in a rule-making process known as design certification. Design certification is expected in 1995. First-of-a-kind-engineering (FOAKE) for both evolutionary designs was initiated in 1993, and is expected to be completed by 1996. Separate programs for site selection and site characterization are being funded by domestic industry. When the design certification, FOAKE, and site programs are completed, pre-approved sites and designs will be available to support restoration of the nuclear option as a safe and economic alternative power source.

The cost and performance data are based on information from Electric Power Research Institute's Technical Assessment Guide.

Option 7.1.1.1

BELLEFONTE REPOWERING WITH INTEGRATED GASIFICATION COMBINED CYCLE (9X250 MEGAWATTS)

The two units at TVA's Bellefonte Nuclear Plant (BLN) have been identified as two of four nuclear units whose disposition is being determined in Energy Vision 2020. In order to properly evaluate all of the options for BLN, it is necessary to include a conversion option of the facility to utilize other fuels. The integrated gasification combined cycle (IGCC) repowering option has been conceived to provide essentially the same station generation capability, using coal gasification technology, as would be provided by the nuclear plant.

The IGCC option for BLN consists of 9 modules, each consisting of 1 gasifier plant, 1 combustion turbine rated at about 190 megawatts, and a heat recovery steam generator (HRSG). The steam produced by the nine HRSGs is collected and routed to the BLN Unit 1 steam turbine. The current BLN high pressure turbine is replaced by a turbine designed to receive steam at 1,250 pounds per square inch absolute and 990°F, and to discharge steam to the existing BLN low pressure turbine. Approximately 1,030 megawatts would be generated by the modified BLN Unit 1 steam turbine. The gasification plant air separation units and other users of station service power consume approximately 500 megawatts, thus reducing the overall plant output to 2,250 megawatts.

The repowered facility utilizes existing BLN equipment such as:

- BLN Unit 1 steam turbine and condenser
- natural draft cooling towers
- station auxiliaries (compressed air and service water)
- switchyard and transmission system
- office and service buildings

New equipment added consists of items such as:

- gasification plant modules
- syngas-fired combustion turbines and heat recovery steam generators
- coal and combustion waste handling and storage equipment
- coal receiving equipment for coal received by barge
- upgraded railroad for receiving coal by rail

The cost and performance data provided are based upon data from a study performed by an external architect and engineer under contract to TVA.

Option 7.1.1.2

BELLEFONTE REPOWERING WITH PULVERIZED COAL (4X616 MEGAWATTS)

The two units at TVA's Bellefonte Nuclear Plant (BLN) have been identified as two of four nuclear units whose disposition is being determined in Energy Vision 2020. In order to properly evaluate all of the options for BLN, it is necessary to include a conversion option of the facility to utilize other fuels. The pulverized coal (PC) repowering option has been conceived to provide essentially the same station generation capability, using conventional PC-firing technology, as would be provided by the nuclear plant.

The PC option for BLN consists of four modules, each comprising one subcritical PC-fired boiler and one high pressure (HP) turbine. Each HP turbine generates about 200 megawatts. The steam leaving each HP turbine is returned to the boiler associated with the HP turbine for reheating. The hot reheat steam from the first pair of boilers is collected and routed to the BLN Unit 1 steam turbine. The current BLN high pressure turbine is replaced by an intermediate pressure (IP) turbine designed to receive steam at 500 pounds per square inch gauge and 950°F and to discharge steam to the existing BLN low pressure turbine. Approximately 930 megawatts would be generated by the modified BLN Unit 1 steam turbine. The hot reheat steam from the second pair of boilers is collected and routed to the BLN Unit 2 steam turbine. It has a configuration similar to the BLN Unit 1 steam turbine and would also produce about 930 megawatts. The users of station service power consume approximately 200 megawatts, thus reducing the overall plant output to about 2,450 megawatts.

The repowered facility utilizes existing BLN equipment such as:

- BLN Units 1 and 2 steam turbines and condensers
- natural draft cooling towers
- station auxiliaries (compressed air and service water)
- switchyard and transmission system
- office and service buildings

New equipment added consists of items such as:

- PC-fired boilers with emissions control equipment
- HP topping turbines and modified BLN steam turbine
- coal and combustion waste handling and storage equipment
- coal receiving equipment for coal received by barge
- upgraded railroad for receiving coal and limestone by rail

The cost and performance data provided are based upon data from a study performed by an external architect and engineer under contract to TVA.

Option 7.1.1.3

BELLEFONTE REPOWERING – PHASED COMBINED CYCLE/INTEGRATED GASIFICATION COMBINED CYCLE – PHASE A – COMBINED CYCLE (9X222 MEGAWATTS)

Option 7.1.1.4

BELLEFONTE REPOWERING – PHASED COMBINED CYCLE/INTEGRATED GASIFICATION COMBINED CYCLE – PHASE B – INTEGRATED GASIFICATION COMBINED CYCLE (9X250 MEGAWATTS)

The phased integrated gasification combined cycle (IGCC) repowering of Bellefonte Nuclear Plant is essentially a combination of the natural gas-fired combined cycle (NGCC) repowering, option 1.1.2.3, followed by an IGCC repowering. The primary differences lie in the number of combustion turbines initially installed and the layout of the facility. Phase A of the phased IGCC repowering would utilize nine advanced combustion turbines arranged so as to accommodate the future integration of gasification plant modules on site. Phase A would also include the construction of a natural gas pipeline for fuel supply to the facility.

Phase B of the phased IGCC repowering would consist of constructing the gasification plant modules, along with the necessary material handling systems and connections necessary for integration of the gasification modules into the overall plant heat cycle. It should be noted that the total plant generating capability would be marginally greater due to optimization for NGCC in the beginning followed by IGCC operation.

The cost and performance data provided are based upon data from a study performed by an external architect and engineer under contract to TVA.

Option 7.1.1.5

BELLEFONTE REPOWERING – INTEGRATED GASIFICATION COMBINED CYCLE WITH COPRODUCTION (11X229 MEGAWATTS)

The two units at TVA's Bellefonte Nuclear Plant (BLN) have been identified as two of four nuclear units whose disposition is being determined in Energy Vision 2020. In order to properly evaluate all of the options for BLN, it is necessary to include a conversion option of the facility to utilize other fuels. The integrated gasification combined cycle (IGCC) with coproduction repowering option has been conceived to provide essentially the same station generation capability as would be provided by the nuclear plant using coal gasification technology, along with coproduction of chemicals to reduce electricity production costs through the sale of chemicals. Methanol and several of its derivatives were chosen for economic evaluation.

The IGCC with coproduction option for BLN consists of 10 modules, each consisting of 1 gasifier plant, 1 combustion turbine rated at about 190 megawatts, and a heat recovery steam generator (HRSG). The steam produced by the 10 HRSGs is collected and routed to the BLN Unit 1 steam turbine. The current BLN high pressure turbine is replaced by a turbine designed to receive steam at 1,215 pounds per square inch absolute and 1,000°F, and to discharge steam to the existing BLN low pressure turbine. Approximately 1,240 megawatts are generated by the modified BLN Unit 1 steam turbine. The gasification plant air separation units and other users of station service power consume approximately 720 megawatts, thus reducing the overall plant output to 2,420 megawatts. The gasification modules produce excess syngas, which is transported to the chemical production unit, along with some steam. Total chemical production would be about 6,600 tons per day. A single biomass gasifier with gas turbine and HRSG is also included in the design. This facility would produce approximately 100 megawatts, increasing the total net output of the facility to 2,520 megawatts.

The repowered facility utilizes existing BLN equipment such as:

- BLN Unit 1 steam turbine and condenser
- natural draft cooling towers
- station auxiliaries (compressed air and service water)
- switchyard and transmission system
- office and service buildings

New equipment added consists of items such as:

- gasification plant modules
- syngas-fired combustion turbines and heat recovery steam generators
- chemical production unit

- coal and combustion waste handling and storage equipment
- coal receiving equipment for coal received by barge
- upgraded railroad for receiving coal by rail
- facilities for shipping chemicals

The cost and performance data provided are based upon data from a study performed by Black & Veatch and Bechtel Power Corporation.

Option 7.1.1.6

BELLEFONTE REPOWERING – INTEGRATED GASIFICATION COMBINED CYCLE WITH COPRODUCTION WITH PARTNERS (2X242 MEGAWATTS)

This option is very similar to option 7.1.1.5, integrated gasification combined cycle repowering, except for the fact that:

- It is assumed that partners would be found to own and operate the gasification plant and the chemical production plant. TVA would own and operate the power block only.
- Seventy percent of the synthesis gas is allocated for coproduction instead of 30 percent, as in option 7.1.1.5. As a result, the power output is reduced to approximately 480 megawatts, while producing the same amount of chemicals as for option 7.1.1.5.
- Only four gasifiers and two combustion turbines/heat recovery steam generators are included rather than 10 each, as included in option 7.1.1.5. To maintain chemical production, the chemical plant is essentially the same as for option 7.1.1.5.

The cost estimate and performance data are extrapolated from information in the Black & Veatch/Bechtel Power Corporation study performed for option 7.1.1.5.

Option 7.1.1.7

BELLEFONTE REPOWERING – INTEGRATED GASIFICATION COMBINED CYCLE DEMONSTRATION WITH PARTNERS (1X400 MEGAWATTS)

This option is similar to option 7.1.1.6 except that it is smaller, has no coproduction, and could be a first module of option 7.1.1.6. It is predicated on receiving funding from the Department of Energy (DOE) through the Clean Coal Technology program. The facility would generate approximately 400 megawatts. No coproduction is assumed with the first module.

As with option 7.1.1.6, the cost and performance data are extrapolated from information in the Black & Veatch/Bechtel Power Corporation study performed for option 7.1.1.5.

Option 7.1.2.1

BELLEFONTE REPOWERING – NATURAL GAS COMBINED CYCLE (10X222 MEGAWATTS)

The two units at TVA's Bellefonte Nuclear Plant (BLN) have been identified as two of four nuclear units whose disposition is being determined by TVA's integrated resource planning process. In order to properly evaluate all of the options for BLN, it is necessary to include a conversion option of the facility to utilize other fuels. The natural gas-fired combined cycle (NGCC) repowering option has been conceived to provide essentially the same station generation capability as would be provided by the nuclear plant using conventional gas-fired combined cycle technology.

The NGCC option for BLN consists of 10 modules, each comprising 1 advanced technology combustion turbine and 1 heat recovery steam generator (HRSG). Each combustion turbine generates about 150 megawatts. The steam leaving each HRSG is collected and routed to the BLN Unit 1 steam turbine. The current BLN high pressure turbine is replaced by a new HP turbine designed to receive steam at 900 pounds per square inch gauge and 1,000°F, and to discharge steam to the existing BLN low pressure turbine. Approximately 750 megawatts are generated by the modified BLN Unit 1 steam turbine. The users of station service power consume approximately 50 megawatts, thus reducing the overall plant output to about 2,220 megawatts.

The repowered facility utilizes existing BLN equipment such as:

- BLN Unit 1 steam turbine and condenser
- natural draft cooling towers
- station auxiliaries (compressed air and service water)
- switchyard and transmission system
- office and service buildings

New equipment added consists of items such as:

- advanced technology combustion turbines with HRSGs
- modified BLN steam turbine
- natural gas pipeline

The cost and performance data provided are based upon data from a study performed by an external architect and engineer under contract to TVA.

Options 7.1.4.1 and 7.1.4.2

COMPLETION OF BELLEFONTE UNITS 1 AND 2 AS NUCLEAR (1X1212 MEGAWATTS)

The Bellefonte Nuclear Plant is located in Jackson County, Alabama, on a peninsula at Tennessee River mile 392. The site

is on the west shore of Guntersville Lake about seven miles east-northeast of Scottsboro, Alabama.

Preliminary construction on the Bellefonte site was started in 1974. In 1985, the pace of construction was slowed due to forecasts which showed that generation would not be required until the late 1990s. In 1988, construction activities were deferred, with plant systems being maintained to allow reactivation on a schedule to meet future power requirements. The units were officially returned to construction status in 1993, but engineering and construction activities remained at a very low level of activity. At the current time, all construction work on the units is suspended pending the outcome of Energy Vision 2020. The Bellefonte Nuclear Plant Units 1 and 2 are approximately 90 percent and 58 percent complete, respectively.

The decision regarding the completion and commercial operation dates for the two-unit Bellefonte Nuclear Plant is being evaluated as part of Energy Vision 2020.

The Bellefonte supply-side option is whether each of the units will be completed as nuclear units. Each of the two Babcock and Wilcox pressurized water reactors (PWRs) has a net capacity of 1,212 megawatts, for a total generating capacity of 2,424 megawatts.

The nuclear fuel is contained inside each of the reactor pressure vessels. The fuel is in sealed metal tubes and consists of slightly enriched uranium dioxide pellets. The fission process in the fuel produces heat. Water serves as both the moderator of the fission process and the coolant. The primary coolant water is pumped through the reactor from below the fuel and is heated by contact with the fuel element tubes. The reactor power is controlled by control rods, lumped burnable poison rods, and a neutron-absorbing boric acid solution. The heated coolant flows in two closed-loop circuits through tubes in steam generators and is then pumped back into the reactor. In each steam generator, a separate body of water flows in contact with the outside surfaces of the tubes and absorbs heat from the reactor coolant, producing steam to power the turbine generator. Once the steam has passed through the turbines, it is exhausted to a condenser, where the steam is condensed back into a liquid to be pumped back to the steam generators to begin the process over again. The condenser has tubes through which raw water is circulated in order to condense the steam. The raw water is then pumped to the cooling towers, where the waste heat is emitted. The waste heat is emitted into the atmosphere through two natural-draft hyperbolic cooling towers. The electrical power thus produced by the turbine generator is fed through the switchyard and transmission line connections into the TVA system to meet system power needs.

The cost and performance data are based on site business plans and completion studies performed by a series of external architect and engineering firms under contract to TVA. Sources for other site information are final safety analysis reports (FSARs) for the project, TVA informational brochures, and TVA Nuclear Power Licensing/Engineering.

Option 7.1.4.3

BELLEFONTE UNITS 1 AND 2 CANCELLATION

A decision to cancel the Bellefonte Nuclear Plant Units 1 and 2 would entail selling to the extent possible the equipment, material, and supplies that currently exist as part of the project. Any remaining investment not recovered through these sales would have to be written off by TVA.

Based on previous TVA and industry experience with nuclear plant cancellations, it appears that the majority of such endeavors result in essentially breaking even (i.e., the costs incurred in selling the assets are offset by the receipts from the sales with little or no net profit). This is due to several considerations including the limited market for nuclear-grade materials, the vintage of nuclear technology, and the uncertainty in nuclear market conditions.

The undepreciated investment in the Bellefonte project is approximately $3,762 million for Unit 1 and $793 million for Unit 2.

The source for this information is TVA Nuclear Power Licensing/Project Engineering.

Option 7.1.4.4

BELLEFONTE NUCLEAR PLANT – PARTNERSHIP FOR COMPLETION AND OPERATION

The Bellefonte Nuclear Plant Units 1 and 2 are approximately 90 percent and 58 percent complete, respectively. These units have been placed in a protective lay up status since 1985. TVA has invested approximately $4.5 billion for the completion of these units. Repeated external reviews of the Bellefonte Construction Program indicate that the work quality is sound, and that the remaining completion scope is well defined. Several external groups have expressed interest in participating in the completion of the Bellefonte Nuclear Project.

Under the partnership, TVA and the partner would form a separate corporate entity to complete, operate, and ultimately decommission the Bellefonte Nuclear Plant. TVA would contribute the equity invested in the plant to date; the partner would contribute the remaining completion cost. TVA and the partner would have access to the capacity and energy output of the plant, and share the net revenues and cash flows of sales from the plant. Sharing arrangements have yet to be negotiated, and general estimates are used for the ranking studies

for Energy Vision 2020. Revenues from the plant would cover operating costs, taxes, decommissioning costs, coverage of additional debt and principle, the partner's return on equity, and provide a return on TVA's sunk cost.

The completed plant would have operating characteristics similar to a TVA completion of Bellefonte Units 1 and 2 as nuclear (options 7.1.4.1 and 7.1.4.2). For purposes of evaluating this option in Energy Vision 2020, the Bellefonte partnership option is modeled in a manner similar to a non-utility generator (see option 13.1.2.1 for example). In this evaluation, it is assumed that TVA receives no net revenue from the partnership. The exact amount of capacity that this option would provide TVA would be negotiated with the other partners and could range anywhere from none to the full 2,412 megawatts represented by both units. Energy Vision 2020 considers a capacity addition of 600 megawatts to represent the option.

Option 8.1.4.1

RECOVER BROWNS FERRY UNIT 1 (1X1065 MEGAWATTS)

The Browns Ferry Nuclear Plant is located in Limestone County, Alabama, on the Tennessee River 10 miles southwest of Athens, Alabama. It is on the north shore of Wheeler Reservoir, 19 miles upstream from Wheeler Dam.

Preliminary construction on the Browns Ferry Nuclear Plant started in 1966. The first of the plant's three units was placed in commercial operation on August 1, 1974, about eight years after construction began. The second unit went into commercial operation in March 1, 1975. The third unit went into commercial operation in March 1977. TVA shut down the plant in March 1985 as part of a review of its nuclear power program. At the present time, Units 1 and 3 at Browns Ferry are not operational. Unit 3 has undergone extensive rework and is scheduled to resume commercial operation in the spring of 1996. Unit 1 is presently idle. The decision regarding the rework and commercial operation of the unit is being evaluated in TVA's integrated resource planning process.

The Browns Ferry supply-side option is whether to complete Browns Ferry Unit 1 as a nuclear unit. Unit 1 of the Browns Ferry facility is a General Electric boiling water reactor (BWR) capable of generating 1,065 megawatts of net electrical capacity.

During operation, nuclear fuel is contained inside the reactor pressure vessel of Unit 1. The fuel is sealed in zircalloy tubes, and consists of slightly enriched uranium dioxide pellets. The fission process in the fuel produces heat. The reactor power level is regulated primarily by control rods. Boron, a chemical element that absorbs neutrons and thereby retards nuclear fission, is sealed within the control rods. The power of the reactor, therefore, can be controlled by positioning the control rods in the core. The power is increased by slowly withdrawing the control rods from the core. The power level may also be controlled, but to a lesser extent, by regulating the flow of the water that is circulated through the reactor core.

Water enters the pressure vessel below the fuel and moves through the assembly of fuel tubes called the reactor core. As the water passes through the core, the heat converts it to steam. The steam leaves the reactor through pipes near the top of the reactor, then passes through the turbogenerator, which generates electricity. The steam is then condensed into water and returned to the reactor, where the cycle is repeated. Waste heat is emitted in the atmosphere through a series of mechanical draft cooling towers. The electrical power thus produced by the turbogenerator is fed through the switchyard and transmission line connections into the TVA system to meet system power needs. *Figure T6-11* shows a diagram of the Browns Ferry Plant simplified steam cycle.

The sources for this information are the site business plans, site Public Relations/Engineering, and Tennessee Valley Authority Environmental Statement, Browns Ferry Nuclear Plant – Units 1, 2, and 3, July 1971.

Option 8.1.4.2

BROWNS FERRY UNIT 1 CANCELLATION

A decision to cancel the Browns Ferry Nuclear Plant Unit 1 is simply a decision not to complete the unit now or in the future. Unit 1 at Browns Ferry is an integral part of the Browns Ferry site, which also includes the operating Unit 2 and soon to be restored Unit 3. This complexity, along with the fact that Browns Ferry Unit 1 has operated in the past, makes it impossible to cancel this project in the same manner as was described for Bellefonte in option 7.1.4.3.

While some surplus equipment from Browns Ferry Unit 1 could be sold, previous TVA and industry experience with nuclear plant cancellations suggests that this would most likely be a break-even proposition (i.e., the cost incurred in selling the assets are offset by the receipts from the sales with little or no net profit). This is due to several considerations including the limited market for nuclear-grade materials, the vintage of nuclear technology, and the uncertainty in the nuclear market conditions.

The undepreciated investment in the Browns Ferry Unit 1 is approximately $708 million. A portion of the plant represented by this investment will remain useful to support operation of Units 2 and 3 even if Unit 1 is cancelled. The fraction of the investment that would be useful has not yet been determined, and has been assumed to be zero in the Energy Vision 2020 evaluation.

FIGURE T6-11. **Browns Ferry Simplified Steam Cycle**

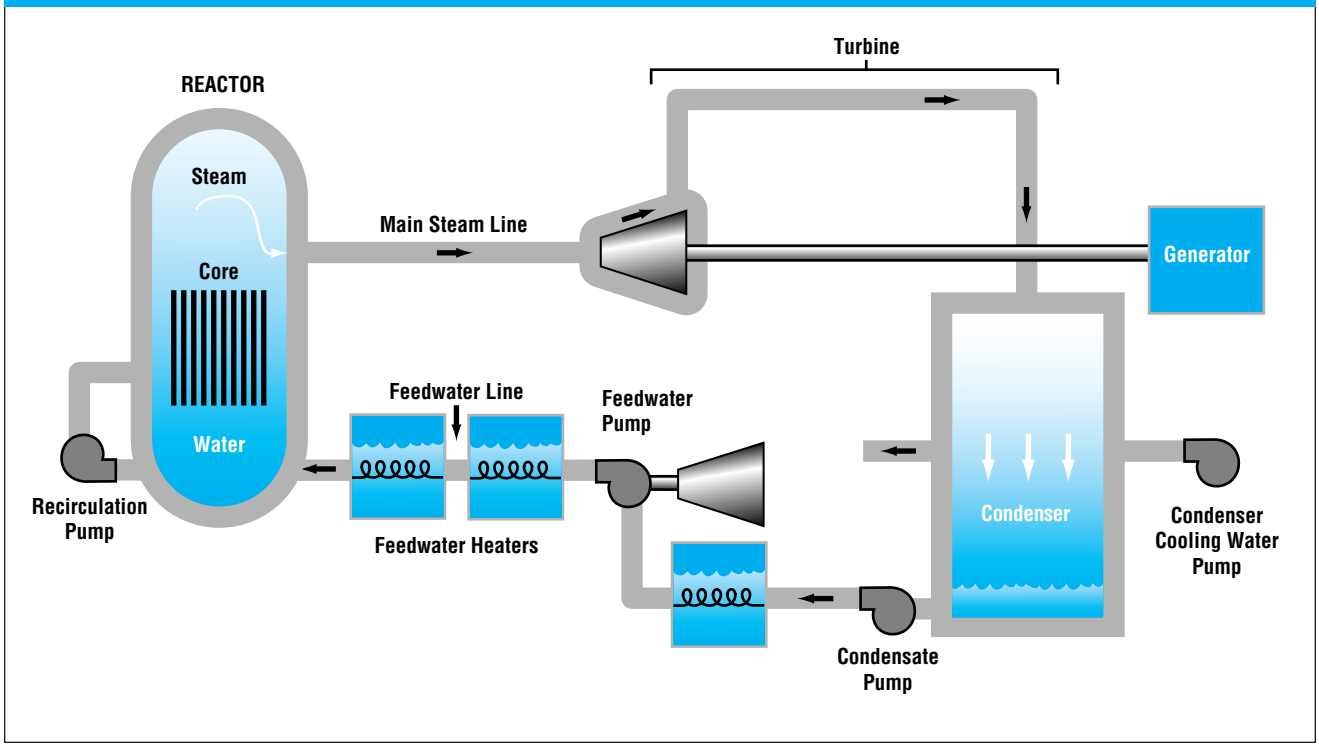

The source for this information is TVA Nuclear Power Licensing/Project Engineering.

Option 8.1.4.3

BROWNS FERRY UNIT 1 RECOVERY WITH FIXED COST TO COMPLETE (1X1065 MEGAWATTS)

One option for Browns Ferry Nuclear Plant Unit 1 is to contract with an outside engineering firm to recover the unit for a fixed cost and operation date. This would remove TVA's exposure to the schedule and completion cost risk. TVA would operate the unit once it had been recovered. All characteristics and costs, except for the capital costs for recovery, would be the same as those for option 8.1.4.1.

Option 9.1.4.1

COMPLETION OF WATTS BAR UNIT 2 (1X1170 MEGAWATTS)

The Watts Bar Nuclear Plant is located in Rhea County, Tennessee, adjacent to the TVA Watts Bar Dam Reservation at Tennessee River mile 528. The plant is on the west shore of Chickamauga Lake about 8 miles southeast of Spring City, Tennessee, and 50 miles northeast of Chattanooga, Tennessee.

Preliminary construction on the Watts Bar Nuclear Plant started in December, 1972. The major construction elements were largely completed by 1985. Since 1985, Watts Bar has been undergoing extensive reviews and modifications. Construction work at Watts Bar was put on hold in December 1990. Work resumed in November 1991, and after extensive site review in May of 1992, the Nuclear Regulatory Commission (NRC) gave the site the go-ahead to resume full construction activities. The first of the plant's two units is scheduled for commercial operation in 1996. The decision regarding completion of the plant's second unit is being evaluated as part of Energy Vision 2020.

The Watts Bar supply-side option is whether to complete the second nuclear unit. Watts Bar Unit 2 is a Westinghouse pressurized water reactor (PWR). The Westinghouse reactor is capable of producing 1,170 MW net of electrical capacity.

During operation, the nuclear fuel is contained inside the Unit 2 reactor pressure vessel. The fuel is in sealed metal tubes and consists of slightly enriched uranium dioxide pellets. The fission process in the fuel produces heat. Water serves as both the moderator of the fission process and the coolant. The primary coolant water is pumped through the reactor from below the fuel and is heated by contact with the fuel element tubes. The heated coolant flows in four closed-loop circuits through tubes in steam generators, and is then pumped back into the reactor. In the steam generator, a separate body of water flows in contact with the outside surfaces of the tubes and absorbs heat from the reactor coolant, producing steam to power the

turbine generator. The reactor power is controlled by control rods and a neutron-absorbing boric acid solution.

The nuclear steam supply system is housed in an individual containment structure. The primary containment consists of a free-standing steel structure with an ice condenser. A separate reinforced reactor shield building encloses the primary containment. The steam power conversion system is designed to remove heat energy from the reactor coolant in the four steam generators and to convert it to electrical energy. The waste heat is emitted in the atmosphere through two natural-draft hyperbolic cooling towers.

The sources for this information are the site business plan, site Public Relations/Engineering, and Tennessee Valley Authority Environmental Report, Watts Bar Nuclear Plant, November 1972.

Option 9.1.4.2

WATTS BAR UNIT 2 CANCELLATION

A decision to cancel the Watts Bar Nuclear Plant Unit 2 would create the need for additional decisions concerning the utilization and/or disposition of the investment to date. The decisions would be to cancel the project and either sell the surplus equipment, material, and supplies, or convert the unfinished nuclear plant to a fossil-fired facility. Finally, any remaining investment not recouped through either the sale of assets or its conversion would have to be written off by TVA.

If the cancel-and-sell decision were made, materials and equipment would be sold to recoup as much of the total investment to date as possible from the project. Based on TVA's experience with nuclear plant cancel-and-sell programs and industry experience, it appears that the majority of such operations result in breaking even (i.e., it costs a dollar to recoup a dollar investment).

This is due to several considerations including the limited market for nuclear-grade materials, the vintage of nuclear technology, and the uncertainty in nuclear market conditions.

The conversion of Watts Bar Unit 2 to a fossil-fired facility is a very difficult option. The major constraints to the conversion option at Watts Bar are:

- Engineering and operational interface problems associated with Units 1 and 2 of the nuclear plant.
- Operational incompatibilities associated with a nuclear and fossil-fired unit at the same site.
- Nuclear Regulatory Commission licensing constraints that would be applied to the fossil-fired unit.

The sunk cost to date in the Watts Bar Unit 2 project is approximately $1,651 million.

The source of this information is TVA Nuclear Power Licensing/Project Engineering.

Option 10.1.2.1

INLET AIR PRECOOLING WITH STORAGE (16X61 MEGAWATTS)

Option 10.1.2.4

WATER SPRAY COOLING OF COMBUSTION TURBINE INLET AIR

Inlet air precooling with ice storage is a technology that allows combustion turbines (CTs) to operate at higher output levels during hot weather than would normally be possible. Combustion turbine performance decreases significantly as the air temperature at the compressor inlet increases. Inlet air precooling provides a mechanism to cool the air entering the compressor inlet to approximately 40°F, thus increasing the turbine output to the levels normally achievable in cool weather. This is achieved by producing and storing ice during off-peak conditions using excess system generation to operate industrial-sized chillers. When the additional combustion turbine output is required during warm weather, water is circulated through the ice storage and routed to fin coils located in the compressor inlet ducting to cool the compressor inlet air. Thus, inlet air precooling is an energy storage technology that is applicable for peaking usage during hot weather. It provides no system benefits during the rest of the year.

Water spray cooling is similar to inlet air precooling with ice storage, except for the method and extent of precooling. A fine mist of water is sprayed into the inlet air stream during hot weather operation. Evaporation of the water reduces the air temperature by 10 to 20 degrees, depending upon ambient conditions. This can increase the turbine output by 5 to 10 percent, depending upon ambient conditions. Spray cooling is more effective in conditions of lower relative humidity and higher dry bulb temperature. Compared to precooling with ice storage, water spray cooling is much simpler and less expensive to install, but provides a smaller gain in turbine output.

Cost and performance data were obtained from Electric Power Research Institute studies and from industry reports on newly installed and operational inlet air precooling systems, with calculations performed by TVA to adjust the performance to the environmental conditions found in the TVA region.

Option 10.1.2.2

NEW COMBUSTION TURBINE AT JOHNSONVILLE TO SUPPLY STEAM TO DUPONT (1X174 MEGAWATTS)

TVA has contracted with DuPont to supply process steam from TVA's Johnsonville coal-fired plant to their New Johnsonville, Tennessee, industrial plant. Currently the steam is extracted from the boilers of Units 1-4.

This supply-side option is an alternative method of supplying this steam while at the same time adding capacity to the power system. In this concept, a new high-efficiency combustion turbine is installed at Johnsonville, and the exhaust gases are routed to a heat recovery steam generator to produce steam for a steam turbine and for extraction to supply DuPont's needs. The steam turbine can increase its generation during those periods when DuPont's steam demand decreases. A backup natural gas-fired boiler provides the reliability required by DuPont.

By providing steam from the combustion turbine, the fossil Units 1-4 would no longer have to provide steam; therefore, the capacity of the station would increase by about 50 megawatts. In addition, Units 1-4 could then be dispatched according to power system needs.

If a natural gas "connector" pipeline was constructed from an interstate pipeline to the plant for this option, it would probably be very inexpensive to increase the capacity of the connector pipeline to convert the existing Johnsonville combustion turbines to natural gas, thereby lowering their fuel cost.

The technologies required for this option are commercially mature.

The source for the cost and performance data is an internal TVA study performed in fiscal year 1994.

Option 10.1.2.3

REPOWERING ONE OF JOHNSONVILLE FOSSIL UNITS 7-10 WITH NATURAL GAS/COMBINED CYCLE (1X465 MEGAWATTS)

Option 25.1.2.1

REPOWERING ALLEN FOSSIL PLANT WITH NATURAL GAS/COMBINED CYCLE (1X705 MEGAWATTS)

Repowering is defined as the reuse of the existing site infrastructure and major power generation equipment to convert an existing fossil fuel unit to a new power generation technology. In most repowering applications, the boiler is replaced, while major equipment, such as the turbine generator, feedwater system, and condenser, is reused in the new plant. Some of the advantages of repowering are:

- Extension of plant life
- Increase in generating capacity
- Improvement in unit efficiency
- Decrease in emissions

Repowering does have some disadvantages. Space availability at the existing plant can be a problem since most plants are fairly "tight." Also, the cost for additional generating capacity is relatively high when compared to a greenfield or new site.

In this particular application of repowering, the boiler and coal handling facilities would be retired while the steam turbine generator, feedwater system, and condenser would be reused. A combustion turbine(s) (CT) and a heat recovery steam generator (HRSG) would be added. The CT's hot exhaust gases generate steam in the HRSG for the existing steam turbine. The steam turbine would generate a significant amount of power (although usually less than before) and the CTs add a large amount of generation.

The unit efficiency and emission characteristics of this option appear very attractive, the capital cost and operation and maintenance costs are relatively low, and the technology is commercially mature. However, the cost of fuel (natural gas) is significantly higher than coal.

The cost and performance data are based on a study conducted by Stone & Webster Engineering Corporation for TVA in 1994.

Option 10.3.1.1

REPOWERING ONE OF JOHNSONVILLE FOSSIL UNITS 1-6 WITH INTEGRATED GASIFICATION COMBINED CYCLE (1X242 MEGAWATTS)

Option 10.3.1.2

REPOWERING ONE OF JOHNSONVILLE FOSSIL UNITS 7-10 WITH INTEGRATED GASIFICATION COMBINED CYCLE (1X250 MEGAWATTS)

Option 20.3.1.1

REPOWERING TWO UNITS OF WATTS BAR FOSSIL PLANT WITH INTEGRATED GASIFICATION COMBINED CYCLE (1X242 MEGAWATTS)

Option 25.3.1.1

REPOWERING ALLEN FOSSIL PLANT WITH INTEGRATED GASIFICATION COMBINED CYCLE (1X500 MEGAWATTS)

Repowering is defined as the reuse of the existing site infrastructure and major power generation equipment to convert an existing fossil fuel unit to a new power generation technology. In most repowering applications, the boiler is replaced, while major equipment such as the turbine-generator, feedwater system, and condenser, is reused in the new plant. Some of the advantages of repowering are:

- Extension of plant life
- Increase in generating capacity
- Improvement in unit efficiency
- Decrease in emissions

Repowering does have some disadvantages. Space availability at the existing plant can be a problem since most plants are fairly "tight." Also, the cost for additional generating capacity is relatively high compared to a greenfield or new site.

In this particular application of repowering, the boiler and coal handling facilities would be retired while the steam turbine-generator, feedwater system, and condenser would be reused. An integrated gasification combined cycle (IGCC) system is added. The major components of the IGCC plant are the gasification plant, the combustion turbine(s) (CT), and a heat recovery steam generator (HRSG). The gasifier would use coal to produce a medium syngas, which is burned to produce power in the CTs. The CT's hot exhaust gases generate steam in the HRSG for the existing steam turbine. The steam turbine would generate a significant amount of power (although usually less than before) and the CTs would add a large amount of generation.

The unit efficiency and emission characteristics of this option appear very attractive, the fuel cost (coal) is very low since high sulfur coal can be used, and the technology is quite close to being commercially mature. However, the capital cost of IGCC repowering is quite high.

The cost and performance data are based on a study conducted by Stone & Webster Engineering Corporation for TVA in 1994.

Option 11.1.5.1

LAUREL BRANCH PUMPED-HYDRO STORAGE (4X386 MEGAWATTS)

Option 15.1.5.1

REYNOLDS CREEK PUMPED-HYDRO STORAGE (3X366 MEGAWATTS)

Option 17.1.5.1

ROREX CREEK PUMPED-HYDRO STORAGE (3X292 MEGAWATTS)

The benefit of energy storage facilities is in the ability to store low-cost, off-peak energy and to discharge it during high peak demand periods. Energy storage facilities can also provide spinning reserve capacity and contribute to solving minimum overnight turndown problems.

In pumped-hydro storage, water is pumped from a lower reservoir to the upper reservoir using off-peak power. During the generating cycle, water is discharged from the upper reservoir through the reversible pump/turbine-generators located in an underground powerhouse. Pumped-hydro storage facilities have relatively long storage times of 10 to 20 hours, relative to other storage technologies.

The emissions from a pumped-hydro plant are essentially zero. There are emissions associated with the source of the power used during the pumping cycle.

Limited sites can be considered for conventional pumped-hydro installations because of the required elevation difference between the two reservoirs. Several sites have been identified in the TVA region, and preliminary engineering studies on these sites have been made.

The cost and performance data are based on a TVA study completed in November 1994.

Option 14.1.3.1

WIND – 33 METER VARIABLE SPEED ADVANCED WIND TURBINE (285X0.35 MEGAWATTS)

Option 14.3.3.1

WIND – 39 METER VARIABLE SPEED ADVANCED WIND TURBINE (444X0.45 MEGAWATTS)

Wind turbines capture the wind's energy with blades that operate as airfoils. Current commercial wind turbine designs produce electrical power at wind speeds exceeding about 10 miles per hour. The energy extractable from the wind is proportional to the cube of the wind speed; if the wind speed doubles, eight times as much power is available.

The most common turbine configuration is a horizontal axis design. A gearbox is used to step up the low hub speed to the generator's nearly synchronous speed of 1,800 revolutions per minute. Most generators now in service are squirrel cage induction generators, although some synchronous machines have been tested. A variable speed turbine using modern power electronics has been developed. This turbine, first offered commercially in 1992, is expected to be widely used during the mid- to late 1990s.

Wind turbine control options include active or passive yawing to track wind direction and stall regulation or blade pitch regulation to control power output. Both stall- and pitch-regulated turbines start turning and generating electricity at a particular wind speed, called "cut-in," and the output power increases as the wind speed increases, up to the wind speed for which it is rated. The turbine will produce its rated output at speeds between the rated wind speed and the "cut-out" speed, the speed at which the turbine stops. Stall-regulated airfoils lose their lifts at high wind speed and are therefore self-regulating. When pitch-regulated turbines are in the presence of wind speeds at or above the turbine's rated wind speed, the pitch of the blade is changed to hold the power at a given level. If the wind speed rises to a cut-out value, the blade feathers and the turbine stops to avoid excessive loads. A number of vertical axis

machines have also been deployed. They have the advantage that all of their heavy components are essentially on the ground. However, as of 1992, no commercial units were being manufactured.

The turbine ratings of state-of-the-art utility-grade turbines have increased from an average of about 50 kilowatts in 1981 to over 300 kilowatts by 1992. Well-designed machines with good maintenance service have all-wind-condition availabilities of 96 to 98 percent.

Each wind turbine has a unique transfer function (power curve) that relates a given wind speed condition to the nominal electrical output of the turbine. This curve is a function of the area swept by the rotor, the capacity of the turbine's generator(s), and the unit's energy conversion efficiency. In general, a variable-pitch turbine is more efficient than a fixed-pitch turbine, but it may also have more moving parts, and thus a higher initial cost. Variable-speed turbines can convert more of the energy in higher speed winds to electrical output. Modern power electronics are required to convert the generator's variable frequency power to constant 60 hertz power.

A wind power plant is composed of a number of wind turbines connected to the utility grid system through one or more interconnections. Typically the turbines are arranged in rows perpendicular to the prevailing wind direction. Turbines are at least 10 rotor-diameters apart in the downwind direction and about 3 diameters apart in the crosswind direction.

When the wind speeds are in the proper range, the turbines operate automatically under the control of their on-board processors. A modern power plant is monitored and controlled by means of telecommunication to a remote computer terminal located at a utility control facility. The operational status of each unit is known at all times and can be changed to meet the required operating conditions. Alarms are identified and diagnosed at the remote facility, and maintenance crews are dispatched as needed.

The cost and performance data are based on information from Electric Power Research Institute's Technical Assessment Guide.

Option 16.1.5.1

RACCOON MOUNTAIN PUMPED-HYDRO ENERGY STORAGE ADDITION (3X255 MEGAWATTS)

The TVA Raccoon Mountain pumped-hydro energy storage facility is a four-unit plant. Three additional generation/pumping units could be added to the facility to increase the total power output. Since the size of the upper storage reservoir would not be increased, the duration of full-load generation at the new, higher power output would be decreased.

The cost and performance information is extrapolated from recent TVA cost studies for new pumped-storage sites (options 11.1.5.1, 15.1.5.1, and 17.1.5.1).

Option 16.1.5.2

RACCOON MOUNTAIN PUMPED-STORAGE MODERNIZATION

TVA's Raccoon Mountain pumped-hydro plant was designed and installed in the 1970s. Since that time, technology has advanced significantly on several fronts of pumped-storage plant design. A modernization project has been identified that will increase the capacity and efficiency of the plant. This project would increase the plant output by approximately 76 megawatts.

The cost and performance information for modernization projects at existing hydro sites was provided by the Fossil and Hydro Projects organization.

Option 18.1.1.1

SHAWNEE UNIT 11 (1X168 MEGAWATTS)

Since 1988, the TVA Shawnee Fossil Plant Unit 10 turbine-generator has been powered by a new atmospheric fluidized bed combustion boiler. The original Unit 10 pulverized coal boiler is idle. A new steam turbine-generator and associated auxiliary systems could be installed as Unit 11. The original Unit 10 boiler could be refurbished to supply steam to the new Unit 11 turbine-generator. This option includes a mechanical draft cooling tower for condenser heat rejection. The other 10 units have no cooling towers.

The original Unit 10 boiler has no flue gas desulfurization (FGD) system, or scrubber capabilities. No new FGD facilities would be installed. Consequently, the fuel would be low sulfur coal.

The cost data are based on results from an engineering study performed by an external architect and engineer.

Option 20.1.1.1

RESTART ONE UNIT OF WATTS BAR FOSSIL PLANT (1X56 MEGAWATTS)

TVA's Watts Bar Fossil Plant was initially placed in service in 1945. It was operated until the 1960s, when it was placed in storage status in anticipation of new nuclear capacity coming on line. It was reactivated in the mid-1970s and operated until 1982, when it was again placed in storage status. Except for some particulate collection equipment added in the 1970s, the plant is still in essentially the same configuration as when initially placed in service. Several modifications that have been identified must be performed before the plant can be returned to service. These modifications range from replacement of

FIGURE T6-12. **Atmospheric Fluidized Bed Combustion Boiler Types**

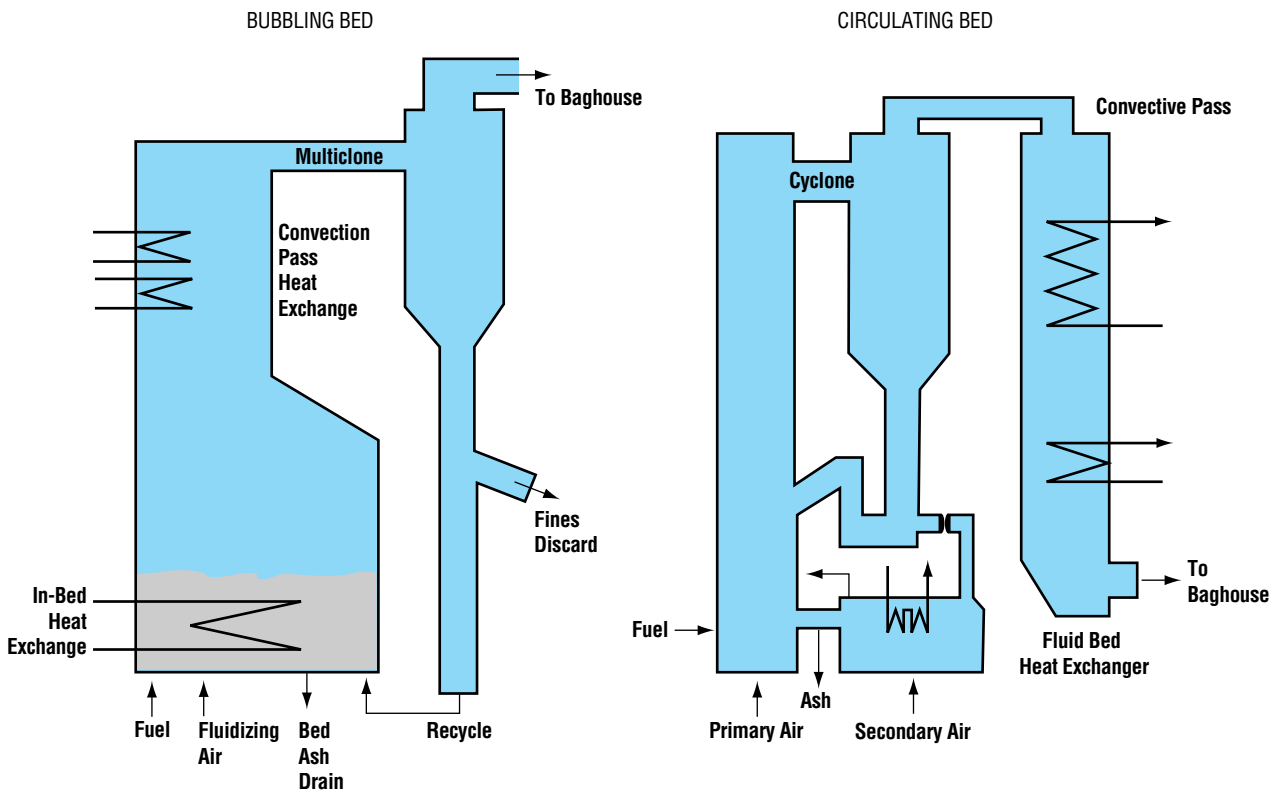

equipment that is no longer functional to modifications required to meet new emissions requirements.

The cost and performance information was taken from a study performed by an external architect and engineer with some adjustments by TVA.

Option 20.1.3.1

REFUSE-DERIVED FUEL – FLUIDIZED BED COMBUSTION REPOWERING OF ONE UNIT OF WATTS BAR FOSSIL PLANT (1X56 MEGAWATTS)

Fluidized bed combustion burns fuel that is suspended in a moving air stream. An atmospheric fluidized bed combustion (AFBC) generating unit is similar to a conventional pulverized coal unit and includes fuel receiving and handling, an air heater, a steam turbine generator and auxiliaries, particulate removal, ash handling, plant cooling, and other balance-of-plant equipment. In bubbling bed AFBC generating units, the heat transfer surface is located both in the bed and in the convection pass above the bed.

In some circulating bed AFBC generating units, the heat transfer surface is located downstream of the cyclone separators, and in a separate fluidized bed heat exchanger that recovers heat from the cyclone catch before the solids are reinjected into the furnace. Other circulating fluidized bed designs locate the superheater surface at the top of the furnace shaft and do not use the separate fluidized bed heat exchanger. *Figure T6-12* shows a diagram of two atmospheric fluidized bed combustor boiler types (the bubbling bed and the circulating bed).

Nitrogen oxides (NO_X) emissions are inherently low. With staged combustion, they can be easily limited to 0.2-0.3 pounds of NO_X per million Btu for bubbling bed units, and to 0.1-0.2 pounds of NO_X per million Btu for circulating bed units. Particulate emissions can be reduced to less than 0.03 pounds per million Btu using a fabric filter.

Due to its fuel flexibility, the AFBC boiler design is only moderately affected by fuel properties, and the boiler size is mostly dependent on flue gas volume. Thus, it could economically burn low-cost high-sulfur petroleum coke (50 cents per million Btu to 70 cents per million Btu) and coal fines, or blends of pet coke and coal fines.

The cost and performance data are based on information from Electric Power Research Institute's Technical Assessment Guide.

Option 23.1.2.1

POWER PURCHASE – BASE LOAD (1X300 MEGAWATTS)

Option 23.1.2.2

POWER PURCHASE – PEAKING (1X300 MEGAWATTS)

TVA considers the market clearing price for power purchases to be related to the technology that is available to generate this power. The peaking power purchase option is based on existing simple cycle combustion turbine technology dispatched as a peaking unit. The operation and maintenance costs reflect the production cost and capital recovery incurred by the owner of this unit. The performance and emission characteristics are similar to those for option 1.1.2.1. The basis for the base-load power purchase option is existing gas-fired combined cycle technology dispatched as a base unit. These operation and maintenance costs reflect the production cost and capital recovery incurred by the owner of this unit. The performance and emission characteristics are similar to those for option 1.1.2.2.

Option 24.1.1.1

UNIT POWER PURCHASE 15 YEAR

A neighboring utility has offered TVA the option to purchase power from one of its existing coal-fired units. The operation and maintenance costs reflect the production cost and capital recovery incurred by the owner of this unit. The performance and emission characteristics reflect those of the coal-fired unit.

Option 24.1.1.2

PARTIALLY COMPLETE PULVERIZED COAL PLANT (1X710 MEGAWATTS)

A neighboring utility has purchased the major capital equipment and completed the siting work and final design of a 710-megawatt pulverized coal (PC) plant. This utility has since deferred the completion of the plant. The plant equipment remains warehoused. The utility has offered to sell the equipment site and design. The capital cost is very competitive as compared to current market prices.

This pulverized coal plant would use midwest 5 pound per million Btu sulfur coal and a wet scrubber sulfur dioxide removal system. The utility is contiguous with the TVA service area and thus no wheeling charges were included in the option. The plant description is similar to that of the subcritical pulverized coal-fired plant, option 1.1.1.5.

Option 26.1.3.1

BIOMASS COFIRING – CUSTOMER SERVICE

The cofiring of biomass with coal in pulverized coal and cyclone-fired units at relatively low biomass percentages has been demonstrated to be a technically feasible and cost-effective method to reduce emissions from coal-fired plants, and in many cases to reduce fuel costs. The level of biomass cofiring, expressed as a percentage of the total fuel energy input to the unit, determines the capital cost of modifications required for a plant to continuously cofire biomass.

The only biomass considered for cofiring is untreated, unpainted wood waste from wood products industries. No trees would be cut to supply biomass for cofiring projects.

The customer service cofiring option would be implemented at plants in the vicinity of wood products industries that are actively seeking cost-effective alternate means of disposing of their wood wastes. TVA has had discussions with several of the industries that have indicated that costs of current disposal methods, typically landfill, have increased to the point that these costs are impacting their competitiveness.

The level of biomass cofiring for the customer service option would be low—less than 0.5 percent. The capital cost would also be low and the cost to TVA of the wood waste, expected to be only transportation cost, would be significantly lower than coal on a Btu basis.

The capital cost estimates are based on conceptual designs and cost estimates made by Ensearch Environmental Corporation in 1994. The fuel cost estimates are based on the report "Biomass Resource Assessment for Twelve TVA Plants" prepared jointly by the University of Tennessee, Oak Ridge National Laboratory, and TVA in 1994.

Option 26.2.3.1

BIOMASS COFIRING – LOW LEVEL

This biomass cofiring option is similar to option 26.1.3.1 except for the level of cofiring. In this option, wood waste would be cofired up to about 1.3 percent at various plants. The level for each plant would depend on the wood cost and supply in the vicinity of the plant. The wood waste cost would be higher than that for the biomass cofiring customer service option and would include transportation and energy costs, but would still be lower than coal costs on a Btu basis. Capital costs would be higher than for the biomass cofiring customer service option, as well.

The capital cost estimates are based on conceptual designs and cost estimates made by Ensearch Environmental Corporation in 1994. The fuel cost estimates are based on the report "Biomass Resource Assessment for Twelve TVA Plants" prepared jointly by the University of Tennessee, Oak Ridge National Laboratory, and TVA in 1994.

Option 26.3.3.1

BIOMASS COFIRING – LESS THAN $5.00 PER TON OF CARBON DIOXIDE EMISSIONS REDUCTION

One of the benefits of biomass cofiring is the reduction of greenhouse gas emissions, i.e., carbon dioxide (CO_2). The reduction is the result of fossil fuel being displaced by biomass. When the wood waste is the biomass, methane emissions are also reduced due to the avoidance of wood conversion to methane in decomposition. Methane is a more potent greenhouse gas than CO_2 (by about 20 times).

This option includes cofiring wood waste in various plants up to the level at which the cost of greenhouse gas emission reductions, expressed in terms of CO_2 equivalents, is less than $5.00 per ton. Costs include the capital cost of plant modifications, additional plant operation and maintenance costs, and increased (or reduced) fuel costs relative to the cost of coal. The level of wood waste cofiring at a particular plant would depend on the wood cost and supply in the vicinity of the plant.

The capital cost estimates are based on conceptual designs and cost estimates made by Ensearch Environmental Corporation in 1994. The fuel cost estimates are based on the report "Biomass Resource Assessment for Twelve TVA Plants" prepared jointly by the University of Tennessee, Oak Ridge National Laboratory, and TVA in 1994.

Option 28.2.3.2

BIOMASS COFIRING – MODERATE LEVEL AT COLBERT FOSSIL PLANT UNIT 5

Resource assessments indicate there are large amounts of favorably priced wood waste available in the vicinity of the Colbert Fossil Plant (COF). The amounts are such that they could potentially support moderate level, up to 10 percent energy input, at COF Unit 5. The capacity of COF Unit 5 is about 500 megawatts. At this level of cofiring in a pulverized coal-fired unit, a dedicated wood waste preparation and feed system would be required. Consequently, the capital cost of this option is higher than that of other cofiring options. Wood waste costs would remain lower than coal costs on a Btu basis.

The capital cost estimates are based on conceptual designs and cost estimates done by Ensearch Environmental Corporation in 1994. The fuel cost estimates are based on the report "Biomass Resource Assessment for Twelve TVA Plants" prepared jointly by the University of Tennessee, Oak Ridge National Laboratory, and TVA in 1994.