Appendix E – Design Drawings - Alternatives B and C

Page intentionally blank

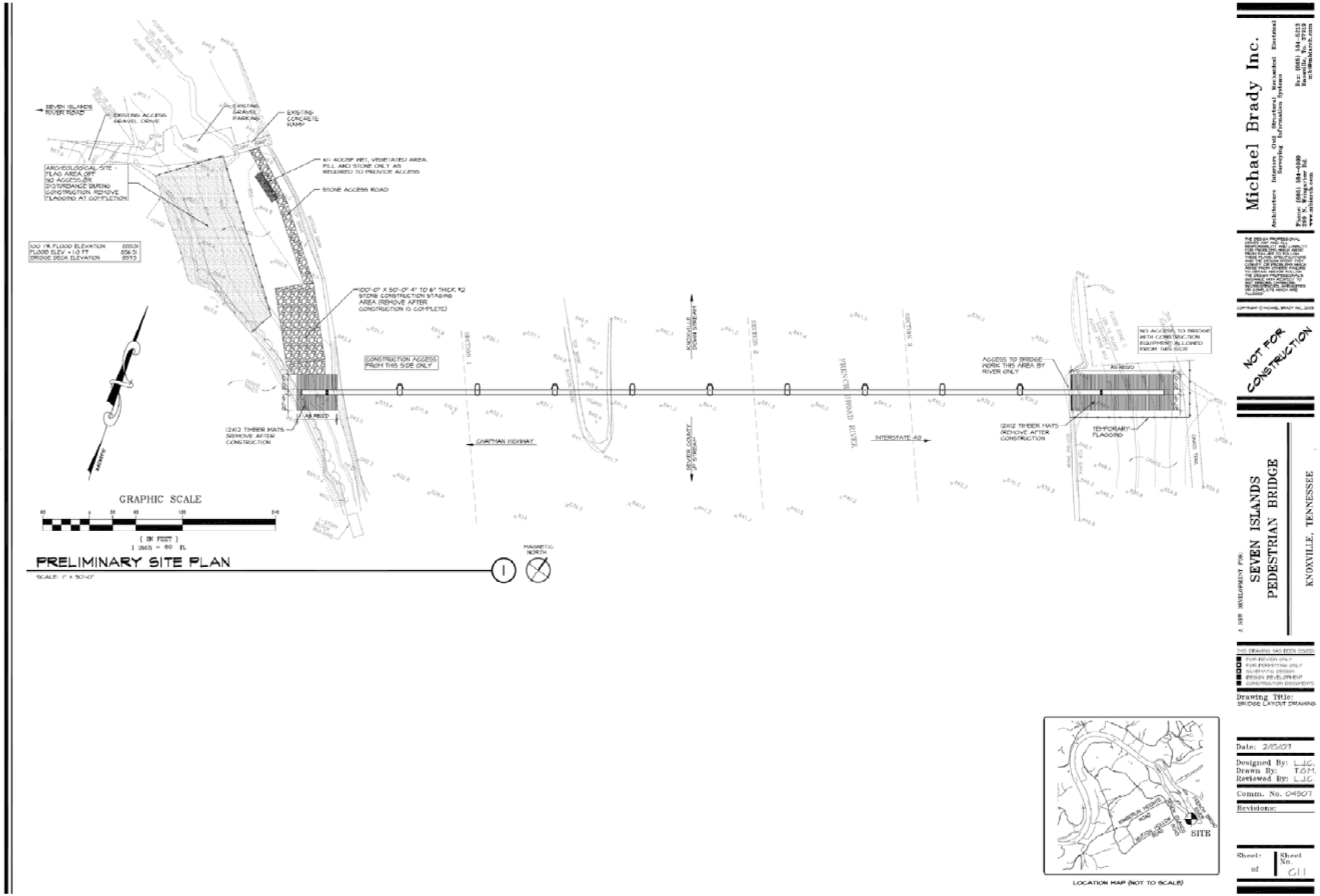
SEVEN ISLANDS RIVER ROAD
EXISTING ACCESS GRAVEL DRIVE
EXISTING GRAVEL PARKING
EXISTING CONCRETE RAMP
STONE ACCESS ROAD
100 YR FLOOD ELEVATION
FLOOD ELEV. + 1.0 FT
BRIDGE DECK ELEVATION
CONSTRUCTION ACCESS FROM THIS SIDE ONLY
12X12 TIMBER MATS (REMOVE AFTER CONSTRUCTION
CHAPMAN HIGHWAY
FRENCH BROAD RIVER
INTERSTATE 40
ACCESS TO BRIDGE WORK THIS AREA BY RIVER ONLY
NO ACCESS TO BRIDGE WITH CONSTRUCTION EQUIPMENT ALLOWED FROM THIS SIDE
TEMPORARY FLAGGING
GRAPHIC SCALE
(IN FEET)
1 inch = 60 ft.
PRELIMINARY SITE PLAN
MAGNETIC NORTH
Michael Brady Inc.
NOT FOR CONSTRUCTION
SEVEN ISLANDS PEDESTRIAN BRIDGE
KNOXVILLE, TENNESSEE
Drawing Title:
BRIDGE LAYOUT DRAWING
Date: 2/15/07
Designed By: L.J.C.
Drawn By: T.G.M.
Reviewed By: L.J.C.
Comm. No. 04507
Revisions:
Sheet: of
Sheet No. G1.1
SITE
LOCATION MAP (NOT TO SCALE)

Page intentionally blank

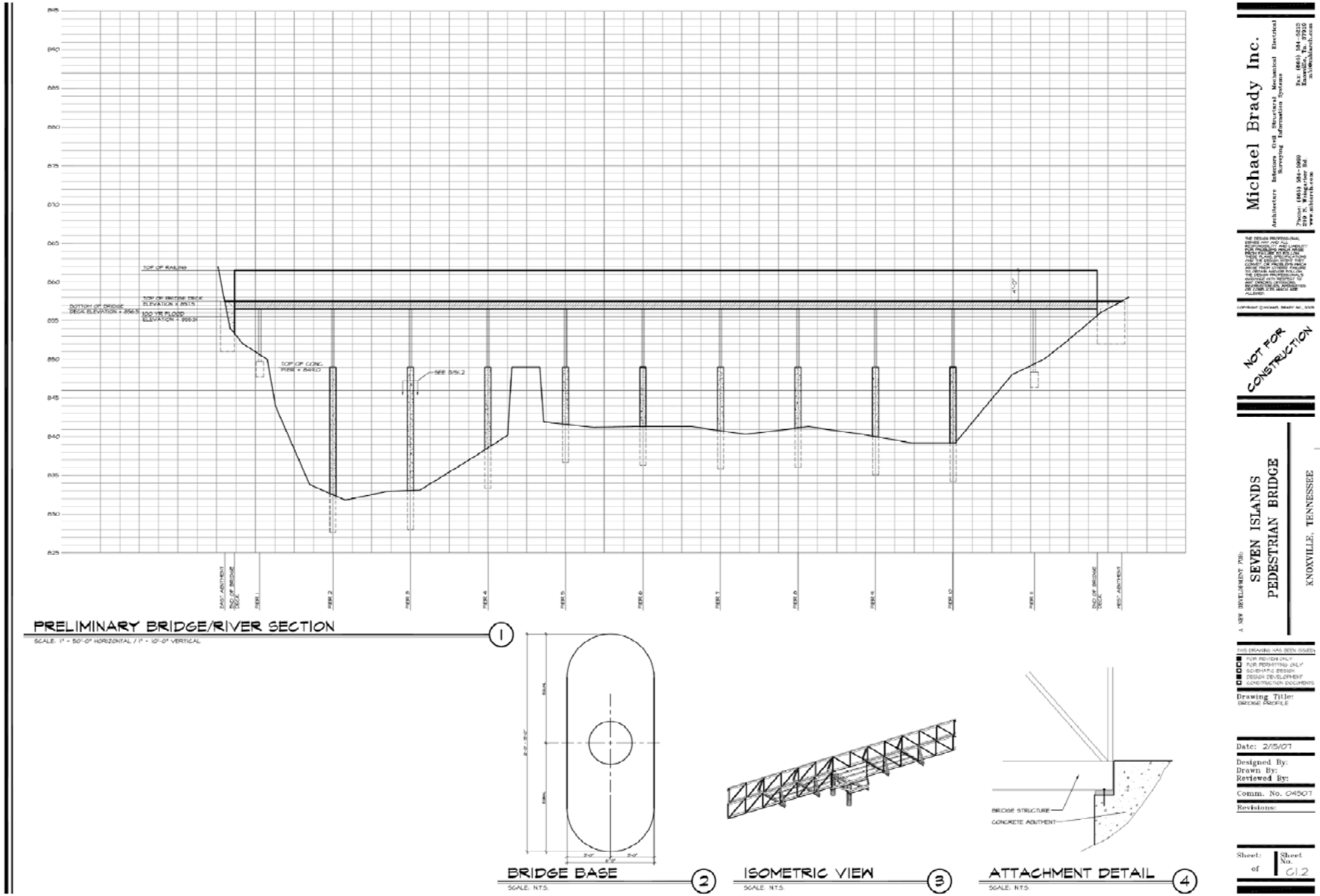
PRELIMINARY BRIDGE/RIVER SECTION
SCALE: 1" = 50'-0" HORIZONTAL / 1" = 10'-0" VERTICAL
BRIDGE BASE
SCALE: N.T.S.
ISOMETRIC VIEW
SCALE: N.T.S.
ATTACHMENT DETAIL
SCALE: N.T.S.
BRIDGE STRUCTURE
CONCRETE ABUTMENT
Michael Brady Inc.
NOT FOR CONSTRUCTION
SEVEN ISLANDS
PEDESTRIAN BRIDGE
KNOXVILLE, TENNESSEE
Drawing Title:
BRIDGE PROFILE
Date: 2/15/07
Designed By:
Drawn By:
Reviewed By:
Comm. No. 04507
Revisions:
Sheet:
of
Sheet No.
C1.2

Page intentionally blank

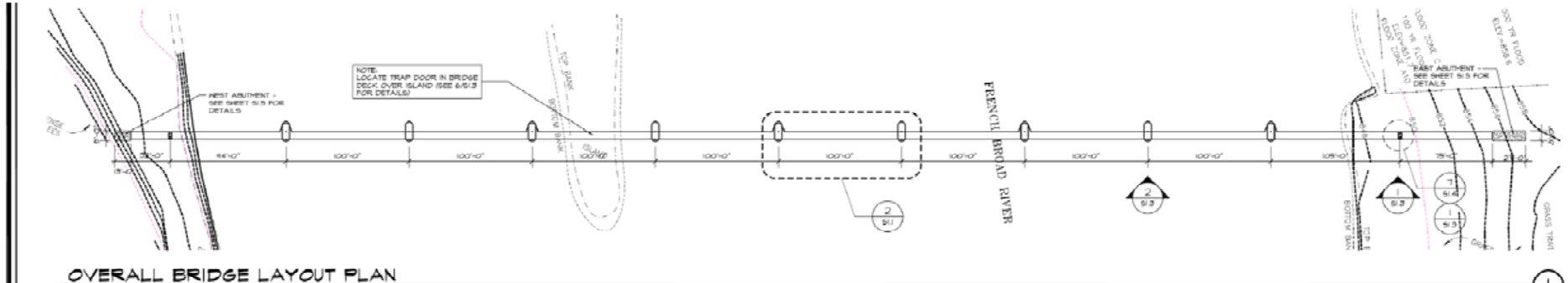

OVERALL BRIDGE LAYOUT PLAN

SCALE: 1" = 20'-0"

1

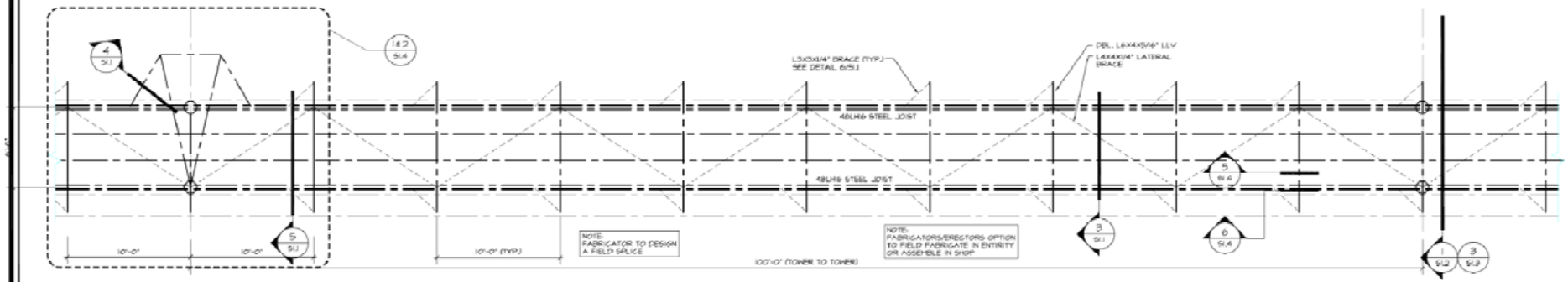

TYPICAL TOWER TO TOWER BRIDGE SECTION

SCALE: 1/4" = 1'-0"

2

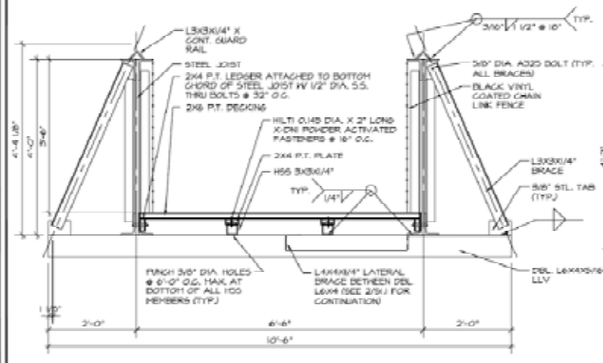

CONNECTION DETAIL

SCALE: 3/4" = 1'-0"

3

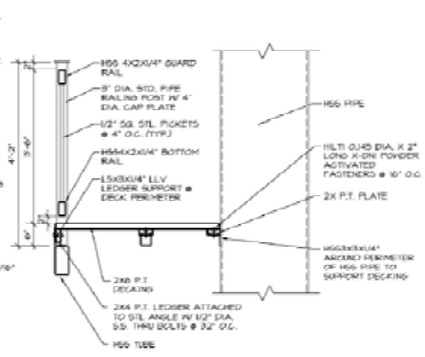

CONNECTION DETAIL

SCALE: 3/4" = 1'-0"

4

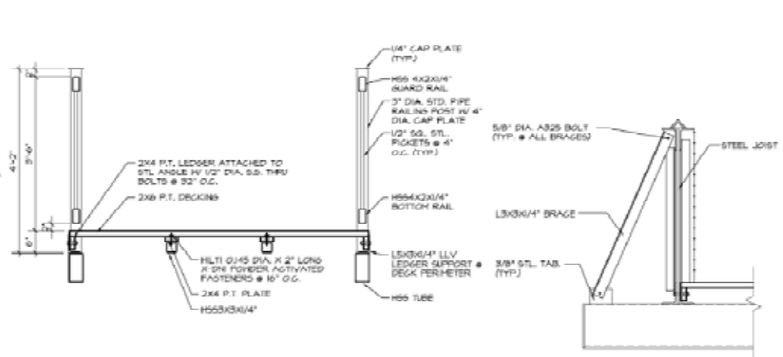

CONNECTION DETAIL

SCALE: 3/4" = 1'-0"

5

CONNECTION DETAIL

SCALE: 3/4" = 1'-0"

6

Michael Brady Inc.

Architecture Interiors Civil Structural Mechanical Electrical Plumbing Information Systems

Phone: (865) 584-6213
Fax: (865) 584-6219
Knoxville, TN. 37919
info@mbainc.com
209 N. Weisgarber Rd.
www.mbainc.com

NOT FOR CONSTRUCTION

A NEW DEVELOPMENT FOR:

SEVEN ISLANDS PEDESTRIAN BRIDGE

KNOXVILLE, TENNESSEE

THIS DRAWING HAS BEEN ISSUED:
- FOR REVIEW ONLY
- FOR PERMITTING ONLY
- SCHEMATIC DESIGN
- DESIGN DEVELOPMENT
- CONSTRUCTION DOCUMENTS

Drawing Title:
BRIDGE LAYOUT PLAN, DETAILS AND NOTES

Date: 2/15/07

Designed By:
Drawn By:
Reviewed By:

Comm. No. 04507

Revisions:

Sheet of | Sheet No. S1.1

Page intentionally blank

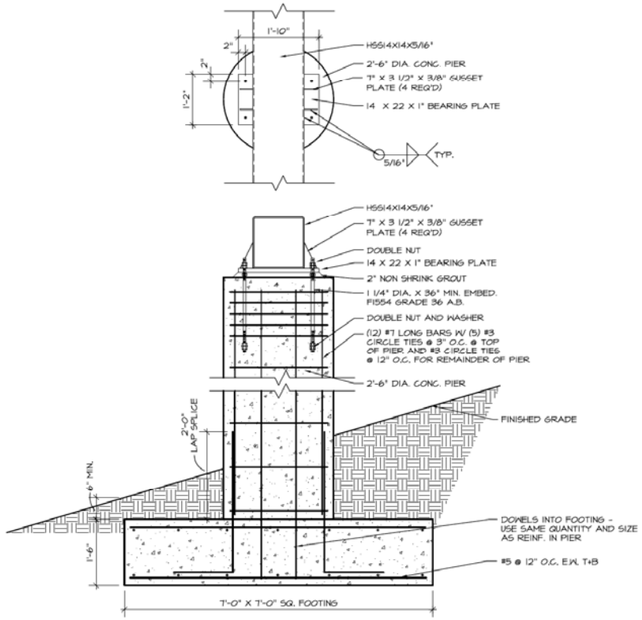

PIER DETAIL 1

SCALE: 3/4" = 1'-0"

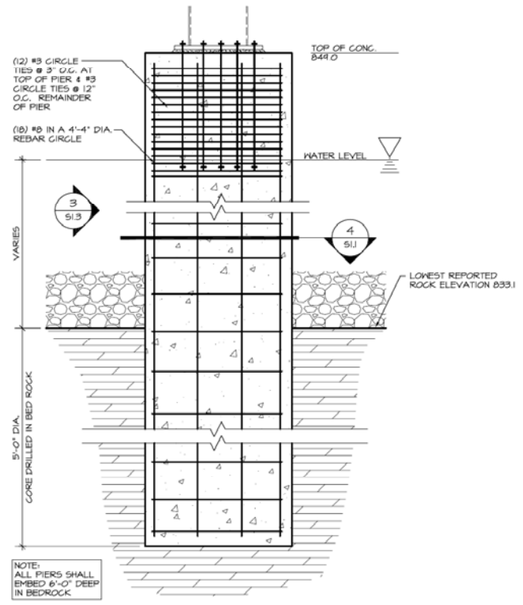

PIER DETAIL 2

SCALE: 1/2" = 1'-0"

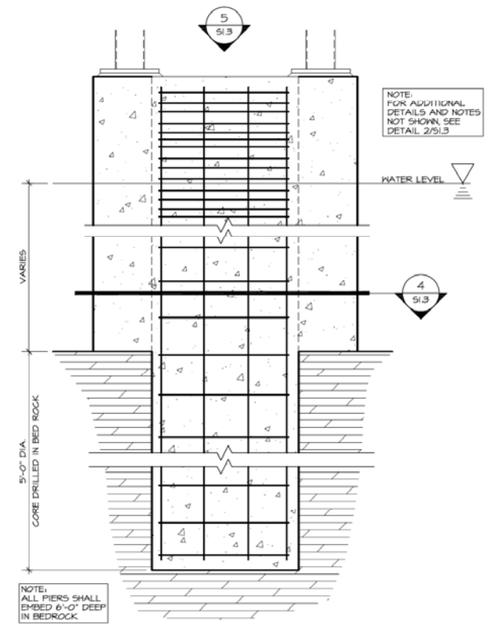

PIER DETAIL 3

SCALE: 1/2" = 1'-0"

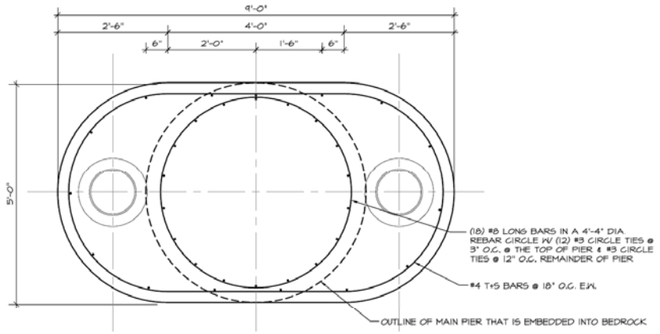

PIER PLAN VIEW (REINF.) 4

SCALE: 3/4" = 1'-0"

BASE PLATE DETAIL 5

SCALE: 1/2" = 1'-0"

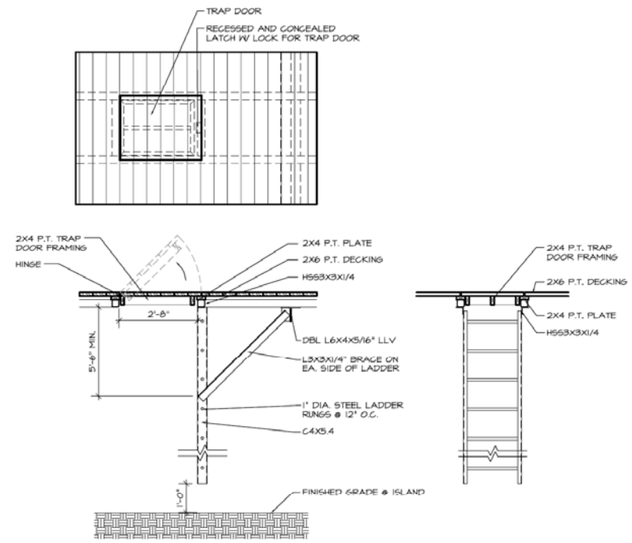

TRAP DOOR DETAIL 6

SCALE: 1/2" = 1'-0"

Michael Brady Inc.
Architecture Interiors Civil Structural Mechanical Electrical
Surveying Information Systems
Phone: (865) 584-0999
299 N. Weisgarber Rd.
Knoxville, Tn. 37919
www.mbiarch.com
Fax: (865) 584-3213
mbi@mbiarch.com

THE DESIGN PROFESSIONAL DENIES ANY AND ALL RESPONSIBILITY AND LIABILITY FOR PROBLEMS WHICH ARISE FROM PLANS, SPECIFICATIONS AND THE DESIGN INTENT THEY CONVEY, OR PROBLEMS WHICH ARISE OBTAIN ANSWERS FOLLOWING THE DESIGN PROFESSIONAL'S GUIDANCE WITH RESPECT TO ANY ERRORS, OMISSIONS, INCONSISTENCIES, AMBIGUITIES OR CONFLICTS WHICH ARE ALLEGED.

COPYRIGHT © MICHAEL BRADY INC., 2005

NOT FOR CONSTRUCTION

A NEW DEVELOPMENT FOR:
SEVEN ISLANDS
PEDESTRIAN BRIDGE
KNOXVILLE, TENNESSEE

THIS DRAWING HAS BEEN ISSUED:
- FOR REVIEW ONLY
- FOR PERMITTING ONLY
- SCHEMATIC DESIGN
- DESIGN DEVELOPMENT
- CONSTRUCTION DOCUMENTS

Drawing Title:
BRIDGE LAYOUT PLAN, DETAILS AND NOTES

Date: 2/15/07

Designed By:
Drawn By:
Reviewed By:

Comm. No. 04507

Revisions:

Sheet: of
Sheet No. S1.3

Page intentionally blank

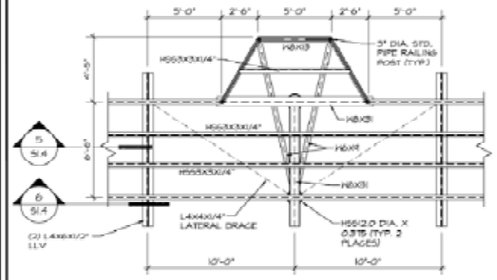

PARTIAL BRIDGE FRAMING 1

SCALE: 1/4" = 1'-0"

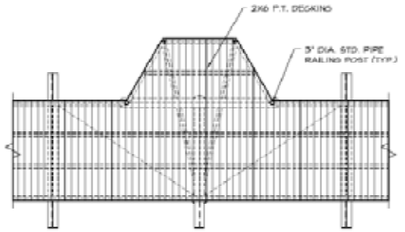

DECKING LAYOUT PLAN 2

SCALE: 1/4" = 1'-0"

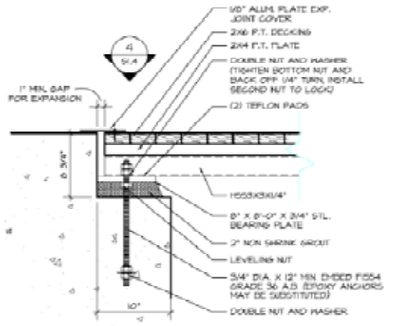

CONNECTION DETAIL 3

SCALE: 1 1/2" = 1'-0"

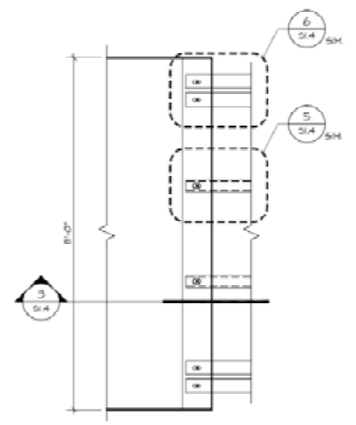

CONNECTION DETAIL 4

SCALE: 1/4" = 1'-0"

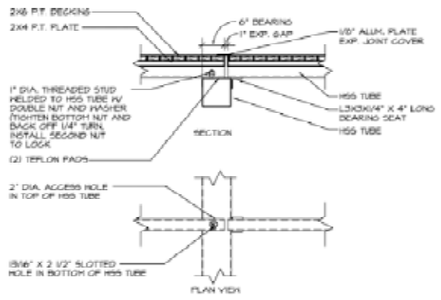

CONNECTION DETAIL 5

SCALE: 3/4" = 1'-0"

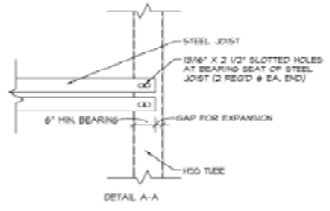

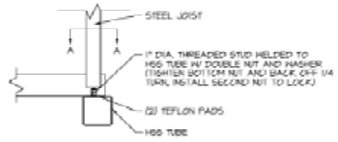

CONNECTION DETAIL 6

SCALE: 3/4" = 1'-0"

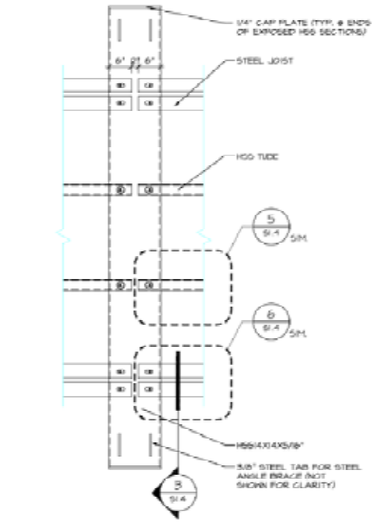

CONNECTION DETAIL 7

SCALE: 3/4" = 1'-0"

NOT FOR CONSTRUCTION

Michael Brady Inc.
Architecture Interiors Civil Structural Mechanical Electrical Surveying Renovations Systems
Phone: (865) 584-0999
Fax: (865) 584-0213
Knoxville, TN. 37919
209 N. Weisgarber Rd.
mail@mbainc.com
www.mbainc.com

THE DESIGN PROFESSIONAL ASSUMES NO RESPONSIBILITY FOR MISUSE OF OR MODIFICATIONS MADE BY OTHERS TO THIS DRAWING OR ANY PART THEREOF. THE DESIGN PROFESSIONAL ASSUMES NO RESPONSIBILITY FOR BUILDING CODE VIOLATIONS AND/OR DEFICIENCIES THAT ARISE FROM OTHERS' FAILURE TO FOLLOW THE DESIGN PROFESSIONAL'S SPECIFICATIONS AND/OR THE MINIMUM REQUIREMENTS OF THE APPLICABLE BUILDING CODE. THE DESIGN PROFESSIONAL ASSUMES NO RESPONSIBILITY FOR ANY DEVIATIONS FROM THE CONSTRUCTION DOCUMENTS THAT ARE NOT APPROVED IN WRITING BY THE DESIGN PROFESSIONAL. THE DESIGN PROFESSIONAL ASSUMES NO RESPONSIBILITY FOR ANY BIDDING, PERMITTING, NEGOTIATIONS, OR CONSTRUCTION WORK PERFORMED FROM INCOMPLETE, OR CONFLICTING DRAWINGS. NO SUBSTITUTIONS OR CONFLICTS FROM ARE ALLOWED.

COPYRIGHT © MICHAEL BRADY INC., 2007

A NEW DEVELOPMENT FOR:
SEVEN ISLANDS
PEDESTRIAN BRIDGE
KNOXVILLE, TENNESSEE

THIS DRAWING HAS BEEN ISSUED:
- [x] FOR REVIEW ONLY
- [ ] FOR PERMITTING ONLY
- [ ] FOR PERMITTING, CONSTRUCTION
- [x] DESIGN DEVELOPMENT
- [ ] CONSTRUCTION DOCUMENTS

Drawing Title:
BRIDGE LAYOUT PLAN, DETAILS AND NOTES

Date: 2/15/07

Designed By:
Drawn By:
Reviewed By:

Comm. No. 04507

Revisions:

Sheet: of
Sheet No. S1.4

Page intentionally blank

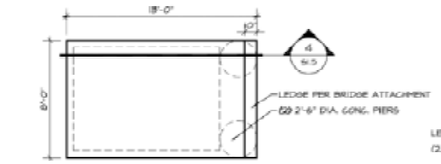

WEST ABUTMENT PLAN 1

SCALE: 1/4" = 1'-0"

EAST ABUTMENT PLAN 2

SCALE: 1/4" = 1'-0"

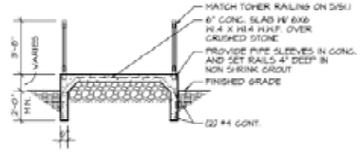

BRIDGE ABUTMENT SECTION 3

SCALE: 1/4" = 1'-0"

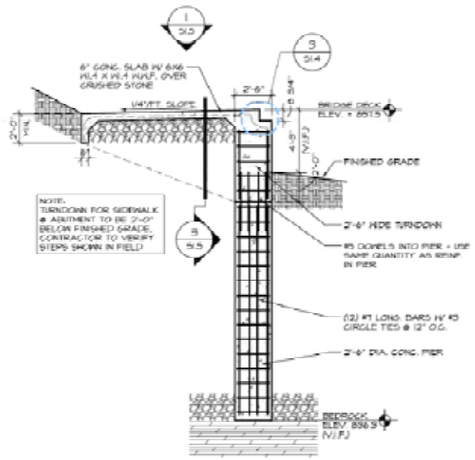

WEST ABUTMENT SECTION 4

SCALE: 1/4" = 1'-0"

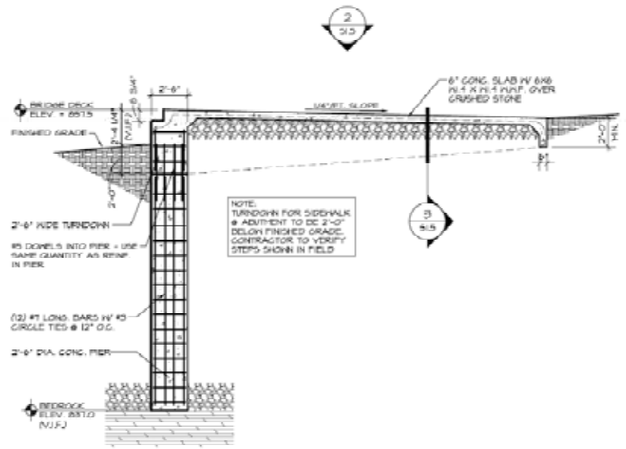

EAST ABUTMENT SECTION 5

SCALE: 1/4" = 1'-0"

Michael Brady Inc.
Architecture Interiors Civil, Structural, Mechanical, Electrical, Surveying, Information Systems
Phone: (865) 584-0999
Fax: (865) 584-8219
Knoxville, TN 37919
info@mbainc.com
809 N. Ridgedale Rd.
www.mbainc.com

THE DESIGN PROFESSIONAL SHOWN HEREON HAS ACTED IN THE PREPARATION OF THESE DRAWINGS AND SPECIFICATIONS WITH COMPETENCE AND LIABILITY APPROPRIATE TO PROFESSIONALS PRACTICING UNDER SIMILAR CIRCUMSTANCES AT THE SAME TIME AND IN THE SAME LOCALITY. HE OR SHE MAKES THESE PLANS AND SPECIFICATIONS AVAILABLE FOR THE PURPOSE OF OBTAINING BIDS AND NEGOTIATING A CONTRACT FOR THE PROJECT. HOWEVER, THE DESIGN PROFESSIONAL HEREON DOES NOT WARRANT OR REPRESENT THAT BIDDING OR NEGOTIATED PROPOSALS, SUBMITTALS OR COMPLETED WORK WILL BE ACCEPTABLE.
COPYRIGHT © MICHAEL BRADY INC., 2007

NOT FOR CONSTRUCTION

A NEW DEVELOPMENT FOR:
SEVEN ISLANDS
PEDESTRIAN BRIDGE
KNOXVILLE, TENNESSEE

THIS DRAWING HAS BEEN ISSUED:
- FOR REVIEW ONLY
- FOR PERMITTING ONLY
- SURVEYING DATUM
- DESIGN DEVELOPMENT
- CONSTRUCTION DOCUMENTS

Drawing Title:
BRIDGE ABUTMENT DETAILS AND NOTES

Date: 2/15/07

Designed By:
Drawn By:
Reviewed By:

Comm. No. 0450T

Revisions:

Sheet: of
Sheet No. S1.5

Page intentionally blank

STRUCTURAL NOTES

Design Criteria:

Bridge Deck Live Load	100 psf
Importance Factor	1.0
Wind Speed	70 mph
Soil Bearing Capacity	2,000 psf
Rock Bearing Capacity	5,000 psf

Foundation & Concrete Notes:

1. Concrete 28 Day Strength shall be as follows:
   a. Footings 3,000 psi
   b. Formed walls, Beams, Structural Slabs, & Stairs 4,000 psi
   c. Conc. exposed to Weather 4,000 psi (w/ air entrainment 4%-6%)
2. All footings shall bear on firm undisturbed residual soil and/or engineered earth fill Compacted to 100% of its maximum dry density as per ASTM D 698-70 (Standard Proctor), unless noted otherwise. **THE SOIL BEARING CAPACITY IS TO BE VERIFIED BY GEOTECHNICAL ENGINEER PRIOR TO CONSTRUCTION.**
3. Provide minimum 1'-6" from finish grade to the bottom of any exterior footing or turn down building wall. Contractor to provide footing steps as required by finish grade and other trades.
4. Backfill retaining walls with clean crushed stone (NO. 57 or 67 size) 2'-6" wide (min.) from the top of the footing to within 12" of finish grades. Provide 6" diameter perforated pipe footing drains at all retaining walls. Footing drains are to be totally independent and not connect with any other type water drainage systems except at the footing drain terminations and then only with the structural engineer or Architect's permission.
5. All concrete and reinforcing steel shall conform to ACI 318 and ACI 301 latest edition, and ASTM A615-60. Contractor to have copies of the ACI documents at the job site during construction.
6. All reinforcing steel shall be epoxy coated according to ASTM A775.
7. Provide top steel reinforcing, same size and spacing as bottom steel, at any location where the soil changes from residual to engineered fill. Top steel shall extend 8' minimum each side of the soil transition area. Use #3 stirrups at 18" o.c..
8. Provide top steel reinforcing, same size and spacing as bottom steel, at any corner in load bearing walls. Top steel shall extend 8' minimum each way from the corner of the wall. Use #3 stirrups at 18" o.c..
9. Provide 2'-6" x 2'-6" corner bars at corners of all continuously reinforced elements such as walls, footings, bond beams, etc.. Corner bars shall be the same size, spacing, location, and quantity as the continuous reinforcing.
10. All reinforcing steel lap splices shall be Class "B" with 24" minimum, unless otherwise noted.
11. The following minimum concrete cover shall be provided for reinforcing bars (per ACI. 318):
    a. Cast against and permanently exposed earth 3"
    b. Formed and Exposed to Earth or Weather
       1) #6 thru #18 bars 2"
       2) #5 bars, MD1 wire, & smaller 1 1/2"
    c. Formed and Not exposed to weather or in contact with the ground
       1) Walls, walls, and Joist (#11 bars and smaller) 3/4"
       2) Beams, girders, and columns (Principle reinf., ties, stirrups, spirals) 1 1/2"
12. Refer to mechanical and Electrical drawings for concrete pads and foundations not shown on the structural drawings.
13. Grout used in grout beds under column base plates shall be cement based, non-shrink grout, the grout shall exhibit no shrinkage in accordance with astm c827, "test method for early volume change of cementitious mixtures" and shall have a minimum 28-day compressive strength of 5000 psi when tested in accordance with astm c-109, "test method for compressive strength of hydraulic cement mortars".
14. Contractor to have an allowance for 5 yds. of reinforced concrete including materials and labor.

General Notes:

1. The contractor is responsible for bracing the structure prior to the completion of all roof, floor, and wall diaphragms.
2. The General Contractor shall verify all dimensions and conditions. The Architect shall be notified of any discrepancies.
3. The contractor is responsible for the means and methods of construction in regards to job site safety.

Structural Steel Notes:

1. Structural steel shall be designed, fabricated, erected, etc. as per AISC Manual of Steel Construction, ninth edition, unless specific reactions are shown, connections shall develop at least 1/2 of the total uniform load capacity tabulated in the tables of the Ninth Edition of the AISC Construction Manual , ASD for the given shape and span.
2. Submit shop drawings of structural steel prior to fabrication of same per specification Section 01300.
3. Structural steel to be a minimum of:
   Channels, Angles, and Plates: A-36
   W-Shapes: A-992
   Pipes: A-53 Grade B
   HSS: A-500 Grade B
4. All splices and attachments to be standard shear connections unless noted otherwise.
5. Connections of steel members shall be made with high strength steel bolts, (A-325) 3/4" ø min. - bearing type connections or welds using E70 electrodes.
6. Tack weld trusses to bearing plates unless noted otherwise.
7. Anchors for connecting steel members to concrete or masonry walls shall be "HILTI HVA Adhesive Anchors" or approved equals.
8. All columns shall be anchored with (4) 3/4" diameter F1554 grade 36 hooked bolts. Threads to project 4-1/2" above top of footing to receive double nuts and washers for leveling and normal 1 1/2" of non-shrink grout unless noted otherwise. 3/4" diameter anchor bolts to have 4 1/2" embedment u.n.o.
9. Chemically grouted anchor bolts such as "HILTI HVA" will be considered as substitutes for 3/4" ø poured in place anchor bolts.
10. Expansion anchors shall be Triboits by Ramset, HSI Kwik Bolt II or Simpson wedge-all anchors. epoxy anchors shall use ASTM A36 threaded rod with Ramset ceramic 6, HILTI HY 150, or Simpson acrylic-tie injection adhesive.
11. All welding shall be performed by operators qualified in accordance with AWS tests for the types of welding required for this project.
12. Protect structural steel from earth, gravel, and/or concrete with 1/8" thick hydrocide mastic.
13. Refer to the Civil, Architectural, Mechanical and Electrical drawings for structural steel items not shown on the structural plans.
14. Minimum welds. (U.N.O.).

Joist girders to supports	1/4" x 2" each side
Bar Joists to supports	1/8" x 2" each side
All other not specified	1/8" Fillet, 2" long except where noted or "all around"

15. Contractor to have an allowance for 1/2 ton of structural steel including materials and labor.
16. Grind all exposed cuts and welds smooth

Steel Bar Joists / Girders

1. Joist shall be designed for the uniform loads specified in the SJI load tables and the concentrated loads indicated on the drawings.
2. Joist manufacturer to supply material and specifications for installation of field located elements such as diagonals to be placed at HVAC supports, bottom chord extensions not sized on drawings, etc..
3. Joist shipping and erection shall conform to the latest SJI specifications and OSHA requirements.
4. All girders and joists framing into columns are to have erection bolts and be field welded into final position. Bottom chords are to be extended to columns and rigidly attached either finger welds are welded.
5. Any hangers attached ceiling support wires supported from bar joists shall be placed at panel points and connected without drilling holes in joists or field welding.
6. Joist girders and decking shall be erected per OSHA 1926.350.
7. K-series bar joists to bear on min. 4"x8"x5/8" bearing plates w/(3) 1/2" ø x 4" headed studs u.n.o.
8. Long span joists to bear on min. 6"x8"x1/2" bearing plate w/(5) 1/2" ø x 4" headed studs u.n.o.

Michael Brady Inc.
Architecture Interiors Civil Structural Mechanical Electrical
Surveying Information Systems
Phone: (865) 584-0999
239 N. Weisgarber Rd.
Knoxville, Tn. 37919
www.mbknox.com
Fax: (865) 584-2213
info@mbknox.com

THE DESIGN PROFESSIONAL SHALL NOT HAVE CONTROL OR CHARGE OF, AND SHALL NOT BE RESPONSIBLE FOR, CONSTRUCTION MEANS, METHODS, TECHNIQUES, SEQUENCES OR PROCEDURES, OR FOR SAFETY PRECAUTIONS AND PROGRAMS IN CONNECTION WITH THE WORK, AND SHALL NOT BE RESPONSIBLE FOR ANY CONTRACTOR'S FAILURE TO CARRY OUT THE WORK IN ACCORDANCE WITH THE CONTRACT DOCUMENTS. THE DESIGN PROFESSIONAL SHALL NOT BE RESPONSIBLE FOR THE ACTS OR OMISSIONS OF ANY CONTRACTOR, SUBCONTRACTOR, OR AUTHORITY HAVING JURISDICTION, OR ANY OF THEIR AGENTS OR EMPLOYEES, OR ANY OTHER PERSONS PERFORMING PORTIONS OF THE WORK.
COPYRIGHT © MICHAEL BRADY INC., 2007

NOT FOR CONSTRUCTION

A TDM DEVELOPMENT FOR:
SEVEN ISLANDS PEDESTRIAN BRIDGE
KNOXVILLE, TENNESSEE

THIS DRAWING HAS BEEN ISSUED:
- [ ] FOR REVIEW ONLY
- [ ] FOR PERMITTING ONLY
- [ ] SCHEMATIC DESIGN
- [ ] DESIGN DEVELOPMENT
- [x] CONSTRUCTION DOCUMENTS

Drawing Title: BRIDGE LAYOUT PLAN, DETAILS AND NOTES

Date: 2/15/07
Designed By:
Drawn By:
Reviewed By:
Comm. No. 04507
Revisions:

Sheet: of
Sheet No. S1.6

Page intentionally blank